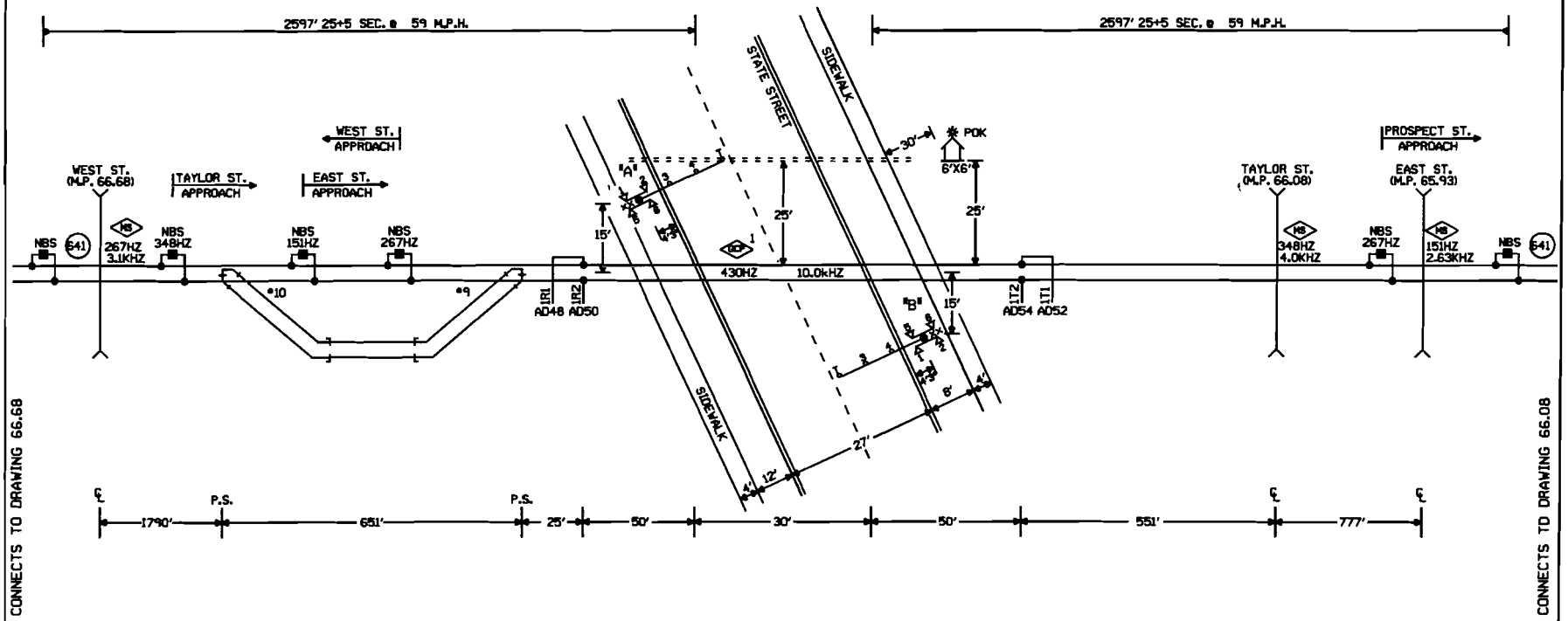

NOTES:

⊗ = TWISTED WIRES
INSULATED 1 TWIST PER FT.
ALL TRACK WIRES 2C. #6

TRANSMITTER AND RECEIVER LEADS TO BE SEPARATED BY AT LEAST 12" IN TRENCH, LENGTHS SHOULD NOT EXCEED MANUFACTURES RECOMMENDATION.

TOP OF FOUNDATION TO BE AT SAME ELEVATION AS THE SURFACE OF THE TRAVELED WAY & NO MORE THAN 4" ABOVE THE SURFACE OF THE GROUND.

ALL BUNGALOW WIRING TO BE #16 AWG FLEX UNLESS OTHERWISE SPECIFIED EXCEPT ALL GROUND WIRE TO BE #6 AWG FLEX OR LARGER.

ALL WIRING IN GATE MECHANISM TO BE #10 "AWG FLEX".

REFER TO UP STANDARD DWG FOR BUNGALOW GROUNDING.

ALL LIGHTS TO BE 12" ROUNDELS.

= = = = = = 4" X 70' CONDUIT

LIGHTS: LED LIGHTS

GATE A: 18'
GATE B: 18'

xx = BELL

CONSTRUCTION NOTES:

1. CHANGE FREQUENCY AT TAYLOR STREET TO 348Hz. ADD TWO NARROW BAND SHUNTS, TAB # 642.

2. REMOVE POLELINE, POLES AND WIRE.

3. ORDER AND REPLACE #10 R.H. 100 LB 25RE SWITCH INSULATION PACKAGE FOR SWITCH LOCATED 726 FEET WEST OF THE CROSSING TO INCLUDE THE FOLLOWING:
(2) 100 LB 25RE INSULATED JOINTS.
(1) #10 R.H. 0 SWITCH PLATE INSULATION
(1) #10 R.H. #1 SWITCH PLATE INSULATION
(1) SWITCH ROD #1 INSULATION
(2) SWITCH ROD #2 INSULATION.

4. ORDER AND REPLACE #9 L.H. 100 LB 25RE SWITCH INSULATION PACKAGE FOR SWITCH LOCATED 75 FEET WEST OF THE CROSSING TO INCLUDE THE FOLLOWING:
(2) 100 LB 25RE INSULATED JOINTS.
(1) #9 L.H. 0 SWITCH PLATE INSULATION
(1) #9 L.H. #1 SWITCH PLATE INSULATION
(1) SWITCH ROD #1 INSULATION
(2) SWITCH ROD #2 INSULATION

W ←—○—→ E

MARENGO, ILLINOIS
STATE STREET
M.P. 66.20
BELVIDERE SUBDIVISION
D.O.T. #174 572G

NEW SHEET

05-21-07 INSTALL FLASHERS AND GATES WITH CWT AT M.P. 66.20 AFE 84098 GRK SSC/JJF	MODIFICATION LEVEL		UNION PACIFIC SIGNAL DESIGN	DES: SSC	UNION PACIFIC RAILROAD	DATE 05-21-07
	D.A. LAST LEVEL CHECKED	DP		DIG: SSC	MARENGO, ILLINOIS	SHEET 1
	LAST LEVEL MOD THIS TYPICAL	DP		CHK: GRK	HIGHWAY CROSSING SIGNALS	DWG 66.20
	LAST LEVEL BY DESIGNER	DP		A.F.E. 84098	CONTROL CIRCUITS	BEV
	CHANGED FROM TYPICAL?	Y		ID: BEV66620.1X	Office of AVP Engineering - Design Omaha, Nebraska	

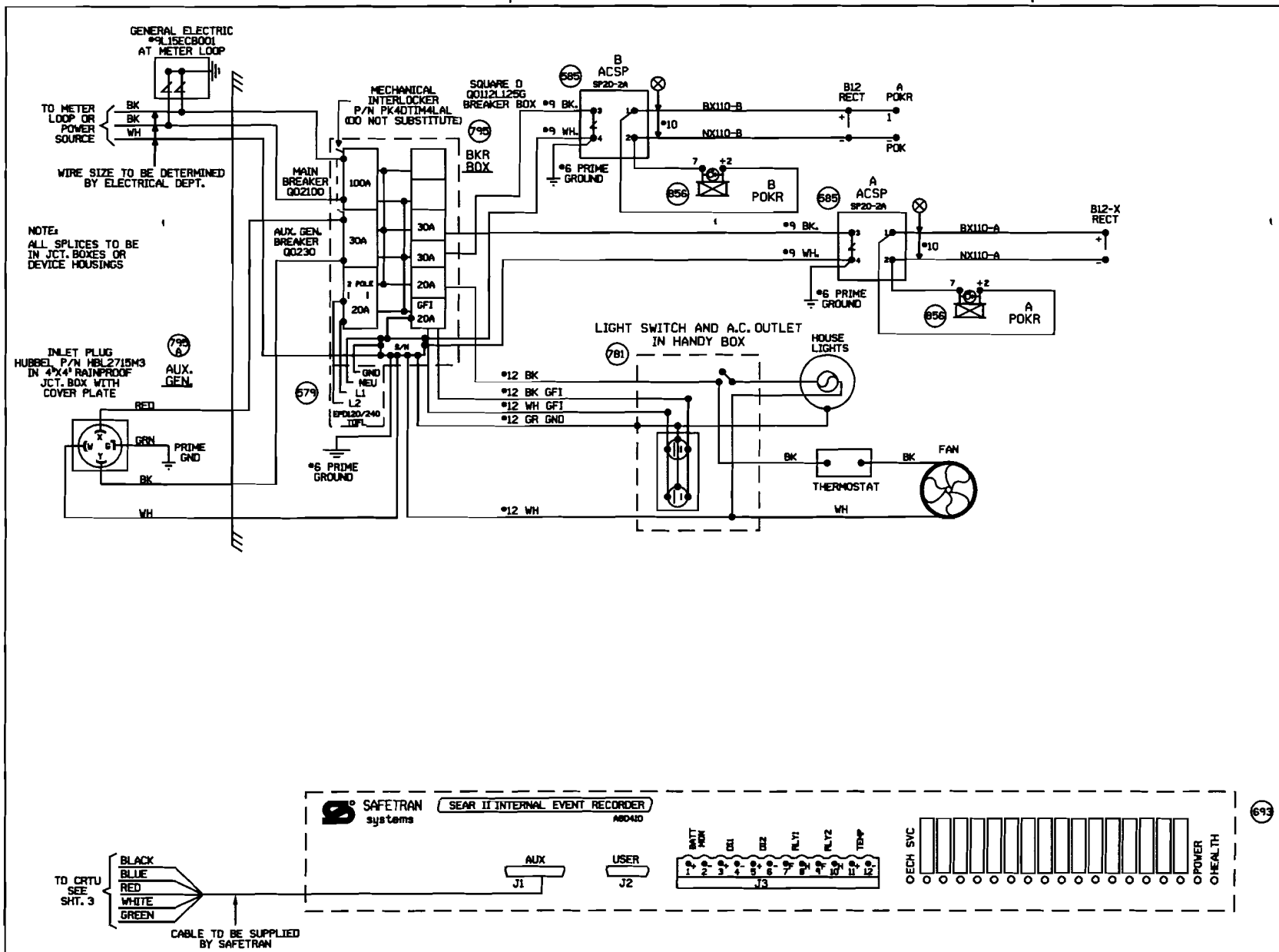

MARENGO, ILLINOIS
STATE STREET
M.P. 66.20
BELVIDERE SUBDIVISION
D.O.T.#174 572G

NEW SHEET

05-21-07 INSTALL FLASHERS AND GATES WITH CWT AT M.P. 66.20 AFE 84098 GRK SSC/JJF	MODIFICATION LEVEL		UNION PACIFIC SIGNAL DESIGN	DES: SSC	UNION PACIFIC RAILROAD	DATE 05-21-07
	Q.A. LAST LEVEL CHECKED	DP		DIG: SSC	MARENGO, ILLINOIS	SHEET 2
	LAST LEVEL MOD THIS TYPICAL	DP		CHK: GRK	HIGHWAY CROSSING SIGNALS	DWG 66.20
	LAST LEVEL BY DESIGNER	DP		A.F.E. 84098	CONTROL CIRCUITS	BEV
	CHANGED FROM TYPICAL?	N		ID: BEV6620.2X	Office of AVP Engineering - Dumas Omaha, Nebraska	

REUSE EXISTING CRTU FIELD TO RECONFIGURE PER NEW DESIGN

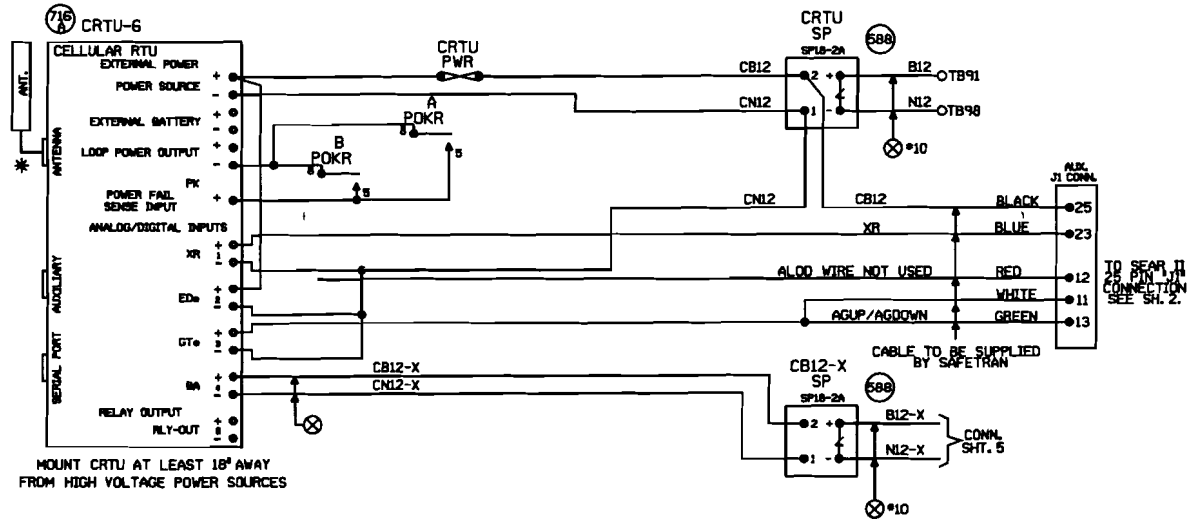

NOTES:

ALL DIODES 1N5060 OR 1N4004 UNLESS OTHERWISE NOTED.

* MOUNT ANTENNA ON TOP OF HOUSE.
  INSTALL ANTENNA CABLE AND CHOKE PER TECH BULLENTIN #99-0015-00

ALL WIRES #18 UNLESS OTHERWISE NOTED.

ALL UNUSED 'NC' INPUTS MUST BE TIED HIGH TO BATTERY

ALL UNUSED ANALOG INPUTS MUST BE TIED HIGH TO BATTERY

ALL UNUSED 'NO' INPUTS MUST BE DISCONNECTED

NORMAL STATE FOR ANALOG CHANNELS IS EQUAL TO THE STORED NOMINAL VOLTAGE +120% OR -81%

CRTU FRONT PANEL DISPLAY CHART INDICATES NORMAL STATE

■ DIGITAL INPUT HIGH, OR □ POWER FAIL INPUT CLOSED

□ DIGITAL INPUT LOW, OR ■ POWER FAIL INPUT OPEN

■ L ← LATCH IS SET BECAUSE CRTU DETECTED AN ALARM CONDITION

12.06V L ←

'RUN MODE' 'RUN MODE-SILENT'
CRTU RADIO IS DISABLED. REPROGRAM CRTU WITH LAPTOP.

ANALOG AND AC INPUT MODULES AND SURGE PROTECTORS MUST BE MOUNTED LESS THAN 18" FROM CRTU

ANALOG MODULES CONVERT DC VOLTAGE TO A SQUARE WAVE. A WORKING ANALOG MODULE WILL HAVE 4.5VDC TO 8.0VDC BETWEEN 5VOUT+ AND 6VOUT-. WHERE, 0VOLTS = 0HZ OUT, 30VOLTS = 10KHZ OUT, AND 15VOLTS = 5KHZ OUT

MAKE SURE CRTU IS PROGRAMMED WITH CALIBRATION SETTINGS.

CRTU CH4 CAN BE CONNECTED TO EITHER SP18 OR EQUIPMENT SIDE OF MDSAL, TAB 565

UNIT INSTALLATION AND SETUP

R.R. SITE ID WHERE: SSSS = 4 CHARACTER SUBDIVISION ID. FILL WITH PRECEDING ZEROS AS REQUIRED. THE MAIN TRACK SUBDIVISION ID* IS IN THE CURRENT TIMETABLE. INDUSTRIAL LEADS, LEASED, AND LEAD TRACKS LISTED WITHIN THE SUBDIVISION MAY HAVE THEIR OWN UNIQUE SUBDIVISION ID*. ALWAYS REFER TO CURRENT PRINTED COPY OF THE TIMETABLE.
LLLLLLLL = 8 CHARACTERS USE DOT* AT CROSSINGS, AND
WOLLLLLL = USE 'WO' THEN MP* AT WAYSIDE LOCATIONS.
EXAMPLE = 0789WO1UGOL.BUT
HBLLLLLL = USE 'HB' THEN MP* AT HBD SITES.
EXAMPLE = 0100-HB55.62TX
THE MP* MUST USE A DECIMAL POINT TO SEPARATE NUMBERS. FILL WITH PRECEDING DASHES AS REQUIRED.
AA = 2 CHARACTER STATE NAME FOR ALL LOCATIONS. MUST BE 14 CHARACTERS LONG, NO SPACES ALLOWED.

SITE IDENTIFIER: SSSSLLLLLLAA	0015-174552GIL
OPERATION TO RESUME:	RUN
SIGNAL STRENGTH dBm	
CARRIER ID	
FIRMWARE VERSION	2.3.06
SERIAL NUMBER	
BOOT VERSION:	
CHN VERSION:	
MDN ASSIGNMENT	
ESN: (MICROBURST ONLY)	
CONFIGURATION NET	MICROBURST
SILENCE INTERVAL	60 MINUTES
HEALTHCHECK INTERVAL	EVERY 2 DAYS
ALARM DEFER DELAY	240 MINUTES (4 HOURS)
SIGNAL STATUS	
SCADANET STATUS	
CALIBRATION CONSTANT CH1	
CALIBRATION CONSTANT CH2	
CALIBRATION CONSTANT CH3	
CALIBRATION CONSTANT CH4	
CALIBRATION CONSTANT PS	

FIELD PROVIDES: SAMPLED NOMINAL VOLTAGES, SCADANET STATUS CALIBRATION CONSTANTS, SERIAL NUMBER, AND SIGNAL STATUS.

CHANNEL SETUP - STANDARD CONFIGURATION 32:XR,EOe,GTe,Ba

CHANNEL NORMAL STATE	SENSE (NO/NC)	NAME FUNCTION	RECOGNITION DELAY SECONDS ACTIVE	RECOGNITION DELAY SECONDS NORMAL	RETURN TO NORMAL	REPORTING MODE	ALARM LINKED CHANNEL	ALARM LINKED CRITERIA	EVENT LOGGING ENABLED OPTIONS
POWER FAIL (CH5) ■	POWER FAIL DETECT NO	PF:Y-PK AC POWER FAIL	7,200 ALARM	300 NORMAL	ENABLED	ALERT	DISABLED	N/A	
CH1 ■	DIGITAL INPUT NC	CH1-XR XR DOWN TO LONG	1,800 ALARM	1 NORMAL	ENABLED	ALERT	DISABLED	N/A	ANALOG VALUE SENT
CH2 ■	DIGITAL INPUT NO	CH2-EOe LIGHT OUT	120 ALARM	10 NORMAL	ENABLED	ALERT	DISABLED	N/A	
CH3 ■	DIGITAL INPUT NO	CH3-GTe GATES NOT UP/DOWN	120 ALARM	10 NORMAL	ENABLED	ALERT	DISABLED	N/A	
CH4 STORED NOMINAL VOLTAGE	ANALOG INPUT N/A	CH4-Ba/V BATTERY MONITOR BATTERY LOW	600 ALARM	1200 NORMAL	ENABLED	ALERT W/UPDATE	DISABLED	N/A	DIGITAL EVENTS
POWER SOURCE (CH6)	ANALOG INPUT N/A	PS-Ba/V BATTERY MONITOR BATTERY LOW	600 ALARM	1200 NORMAL	ENABLED	ALERT W/UPDATE	DISABLED	N/A	PF:Y-PK CH1-XR CH2-EOe CH3-GTe

ANALOG CHANNEL	USEFUL RANGE VOLTS LOW	USEFUL RANGE VOLTS HIGH	DISPLAYED RANGE VOLTS LOW	DISPLAYED RANGE VOLTS HIGH	RELATIVE ALARM POINT LOW	RELATIVE ALARM POINT HIGH	ABSOLUTE ALARM POINT LOW	ABSOLUTE ALARM POINT HIGH	AUTOMATIC UPDATE INTERVAL	STORED NOMINAL VOLTAGE	SAMPLED NOMINAL VOLTAGE
CH4	0.0	30.00	0.0	30.00	81%	120%	10.0	24.0	14 DAYS	12.69	
POWER SOURCE	0.0	30.00	0.0	30.00	81%	120%	10.0	24.0	14 DAYS	12.69	
RELAY OUTPUT	NAME RLY-OUT		ACTIVE SET-UP-OPEN		NORMAL CLR-ON-CLOSE		PULSE DURATION		15 SECONDS	SteDfg Ver: 2.3.3 REV'D 9-20-02	

MAINTENANCE OPERATIONS

TO START OR ABORT ANY PROCEDURE

1. PRESS THE 'CANCEL' BUTTON FIRST

WHEN RESPONDING TO A CALL, PUT THE CRTU IN THE 'SILENCE ALARMS' MODE

1. PRESS 'SELECT' AND THEN '+' ARROW' BUTTON UNTIL
   DISPLAY: ACTION?
   SILENCE ALARMS
2. PRESS THE 'SELECT' BUTTON TWICE
3. CORRECT PROBLEM AND SIMULATE NORMAL TRAIN MOVEMENT THROUGH THE LOCATION
4. EXAMINE EACH CHANNEL ON THE CRTU
5. PRESS THE '+/- ARROW' BUTTON
   VERIFY ALL CHANNELS INDICATE A NORMAL STATE
   NORMAL STATES ARE ON THE CHANNEL SETUP CHART

CLEAR TIMERS, LATCHES AND SEND ALL NORMAL

1. DO STEPS #1 - #5 ABOVE, AND PRESS 'CANCEL'.
2. PRESS 'SELECT' AND THEN '- ARROW' BUTTON UNTIL
   DISPLAY: ACTION?
   SERVICE MODE
3. PRESS 'SELECT' AGAIN TO RESET TIMERS, AND IF
   DISPLAY: SERVICE MODE
   ALL NORMAL
4. PRESS 'SELECT' AGAIN TO CLEAR LATCHES, AND SEND ALL NORMAL. SKIP STEPS #5-#6.
5. HOWEVER, IF ALARMS ARE NOT CLEARED:
   DISPLAY: SERVICE MODE
   ALARMS PENDING/PRESENT
6. PRESS 'CANCEL', CORRECT PROBLEM AND REPEAT STEPS #2 THRU #5 UNTIL ALL NORMAL SENT.

TO CANCEL THE 'SILENCE ALARMS' MODE

1. PRESS 'SELECT' AND THEN '+' ARROW' BUTTON UNTIL
   DISPLAY: ACTION?
   CANCEL SILENCE
2. PRESS THE 'SELECT' BUTTON AGAIN

EXAMINE & SET BATTERY VOLTAGE NOMINAL VALUE

1. PRESS THE '+' ARROW' OR '-' ARROW' BUTTON UNTIL THE DESIRED CHANNEL IS DISPLAYED.
   DISPLAY: PS-Ba
   13.83V NORMAL
2. VERIFY THE DISPLAYED READING WITH A DIGITAL VOLTMETER
3. PRESS THE 'SELECT' BUTTON, AND THE CRTU DISPLAY WILL SWITCH BETWEEN CURRENT/SAVED NOMINAL VOLTAGE VALUES.
   DISPLAY: NOMINAL ON #6? (CURRENT)
   13.83
   DISPLAY: SAVED NOMINAL 6 (STORED)
   12.69
4. PRESS THE 'SELECT' BUTTON AND THE CURRENT OR 'NOMINAL ON' VALUE WILL BE SAMPLED AND STORED AS THE 'SAVED NOMINAL' VALUE
5. VERIFY THE 'NOMINAL ON' AND 'SAVED NOMINAL' VALUES ARE EQUIVALENT, REPEAT STEPS #1 THRU #3 & PRESS THE 'CANCEL' BUTTON.

NEW SHEET

MARENGO, ILLINOIS
STATE STREET
M.P. 66.20
BELVIDERE SUBDIVISION
D.O.T.#174 572G

05-21-07 INSTALL FLASHERS AND GATES WITH CWT AT M.P. 66.20	
AFE 84098	GRK SSC/JJF

MODIFICATION LEVEL

Q. A. LAST LEVEL CHECKED	DJ
LAST LEVEL MOD THIS TYPICAL	DJ
LAST LEVEL BY DESIGNER	DP
CHANGED FROM TYPICAL?	Y

UNION PACIFIC — SAFETY FIRST — SIGNAL DESIGN

DES:	SSC
DSN:	SSC
CHK:	GRK
A.F.E.	84098
ID:	BEV6620.3X

UNION PACIFIC RAILROAD

MARENGO, ILLINOIS
HIGHWAY CROSSING SIGNALS
CONTROL CIRCUITS

Office of AVP Engineering - Omaha, Nebraska

DATE	05-21-07
SHEET	3
DWG	66.20
	BEV

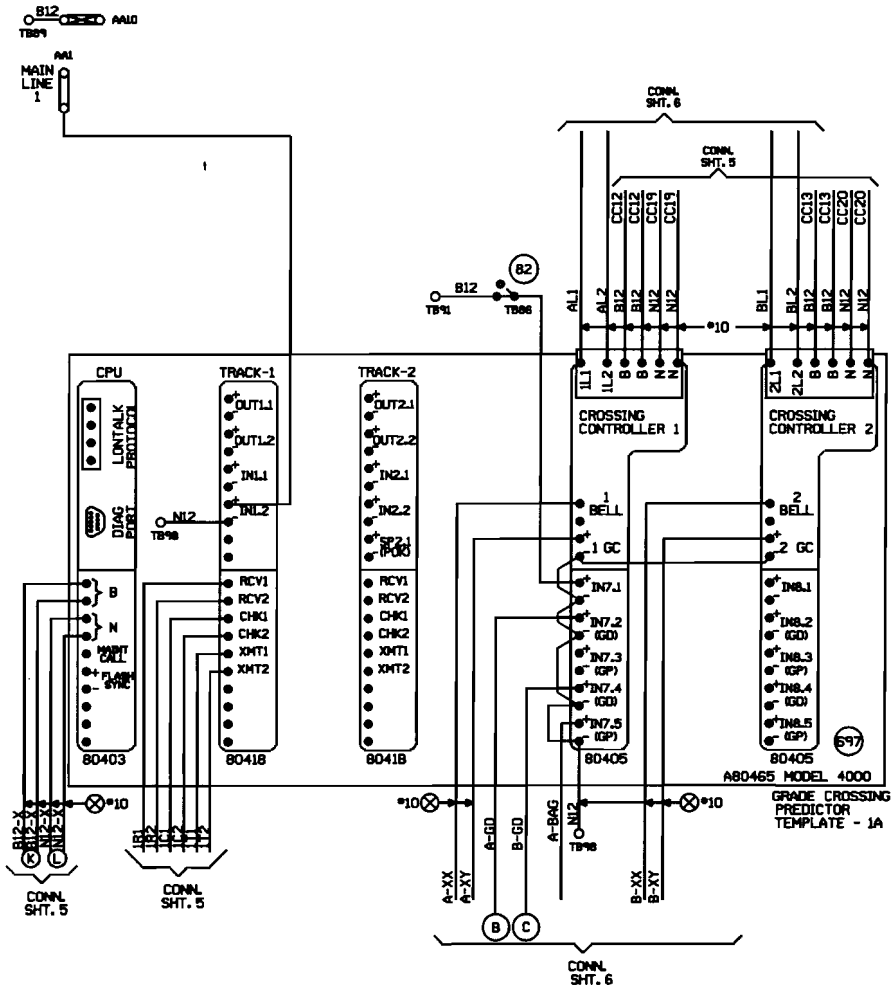

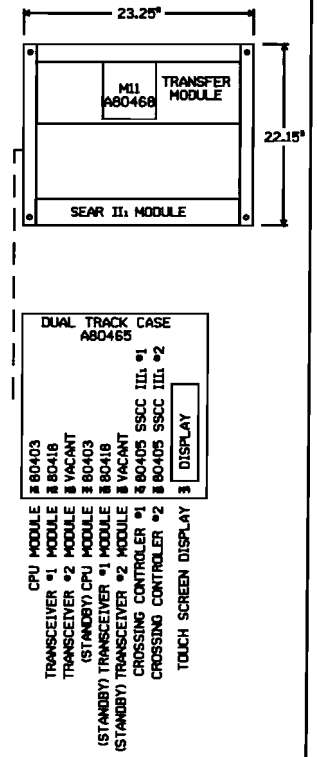

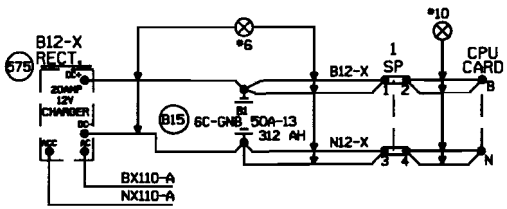

"Mf" FREQUENCY (HZ)	MAXIMUM TRANSMIT WIRE LENGTH (FEET)
86	100
114	125
156	150
211	200
285-970	250

NOTE:
EACH TRANSMITTER TO RAIL WIRE FROM XMT1 AND XMT2 MUST NOT EXCEED THE MAXIMUM LENGTH SPECIFIED IN THE TABLE SHOWN. THE RECEIVER WIRE LENGTH IS NOT CRITICAL. DOES NOT APPLY TO 6 TRACK WIRE APPLICATION.

NEW SHEET

MARENGO, ILLINOIS
STATE STREET
M.P. 66.20
BELVIDERE SUBDIVISION
D.O.T.#174 572G

05-21-07
INSTALL FLASHERS AND GATES WITH CWT AT M.P. 66.20
AFE 84098 GRK
SSC/JJF

MODIFICATION LEVEL	
Q. A. LAST LEVEL CHECKED	DP
LAST LEVEL MOD THIS TYPICAL	DP
LAST LEVEL BY DESIGNER	DP
CHANGED FROM TYPICAL?	Y

UNION PACIFIC
SIGNAL DESIGN

DES: SSC
DIG: SSC
CHK: GRK
A.F.E. 84098
ID: BEV6620.4X

UNION PACIFIC RAILROAD
MARENGO, ILLINOIS
HIGHWAY CROSSING SIGNALS
CONTROL CIRCUITS
Office of AVP Engineering - Design Omaha, Nebraska

DATE 05-21-07
SHEET 4
DWG 66.20
BEV

Minimum Program Steps Report

Location and SIN

DOT Number: 174572G
Milepost Number: 66.20
Site Name: MARENGO, ILLINOIS

SIN: 762010010016 *

* Parameter is part of office check number calculation.

MCF and Template Selection

MCF Name: GCP-T6X-01-2.mcf
MCF Revision: 012
MCFCRC: 0DFE7A0C

Template = 1A:6 Trk Bi *

* Parameter is part of office check number calculation.

Minimum Program Steps

TEMPLATE: track 1-Bi, Island
Track 1 : GCP Frequency = 430 Hz
Track 1 : Approach Distance = 2597 ft See Plans
Track 1 : Prime Warning Time = 25 sec *
Track 1 : GCP Transmit Level = Medium Set in Field
Track 1 : Isl Frequency = 10.0 kHz

TEMPLATE: AND 1 XR
AND 1 Enable Used = Yes *

TEMPLATE: IP assignment 1
IN 1.2 = Out Of Service IP 1 *

TEMPLATE: IP assignment SSCC
IN 7.1 = AND 1 XR Enable *

GCP: track 1
Track 1 : Island Distance = 127 ft *

ADVANCED: out of service
OOS Control = OOS IPs *

* Parameter is part of office check number calculation.

Check Numbers

Office Check Number: 7AA1BB44
Config. Check Number: 351DCBF0
(Based on MCF Revision 012)

Parameters not part of office check number calculation:

Track 1 : GCP Frequency = 430 Hz
Track 1 : Approach Distance = 2597 ft See Plans
Track 1 : GCP Transmit Level = Medium Set in Field
Track 1 : Isl Frequency = 10.0 kHz

Comments

<none>

Configuration Package File

Filename: BEV6620 174572G.pac
Path: O:\UPRR\JXXD00173\DOCUMENTS\gcp program\
Date/Time:1:00 PM 8/9/2007

MARENGO, ILLINOIS
STATE STREET
M.P. 66.20
BELVIDERE SUBDIVISION
D.O.T.#174 572G

NEW SHEET

05-21-07 INSTALL FLASHERS AND GATES WITH CWT AT M.P. 66.20 AFE 84098 GRK SSC/JJF	NOTE: Actual OFFSET and ISLAND distances must be entered by field personnel.	UNION PACIFIC SAFETY SAFETY SAFETY SIGNAL DESIGN	DES. SSC DWN. SSC CHK. GRK A.F.E. 84098 ID= BEV6620.4AX

UNION PACIFIC RAILROAD
MARENGO, ILLINOIS
HIGHWAY CROSSING SIGNALS
CONTROL CIRCUITS
Office of AVP Engineering - Omaha, Omaha, Nebraska

DATE 05-21-07
SHEET 4A
DWG 66.20
BEV

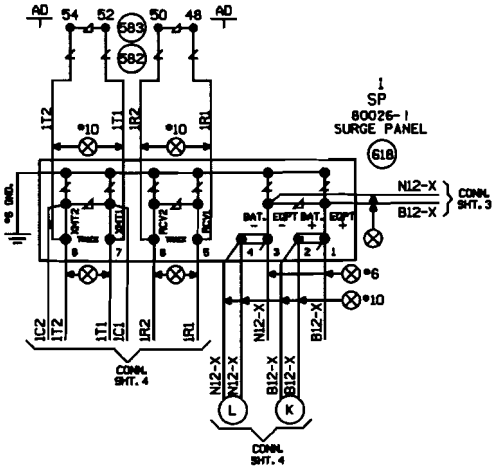

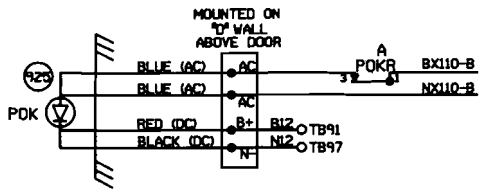

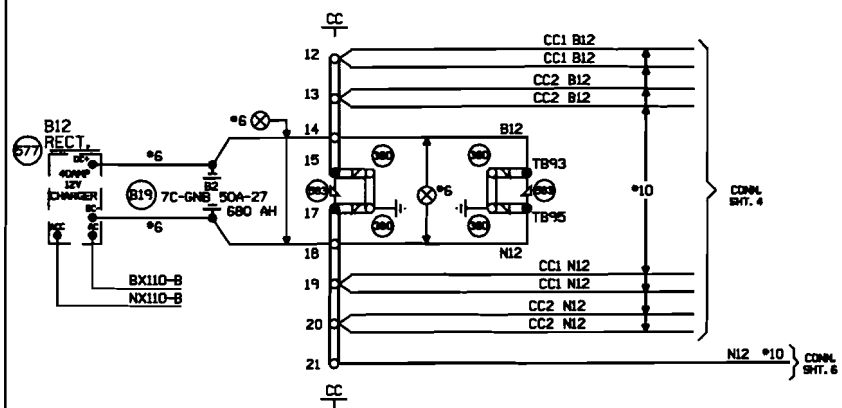

MARENGO, ILLINOIS
STATE STREET
M.P. 66.20
BELVIDERE SUBDIVISION
D.O.T.#174 572G

NEW SHEET

06-21-07 INSTALL FLASHERS AND GATES WITH CWT AT M.P. 66.20 AFE 84098 GRK SSC/JJF	MODIFICATION LEVEL		UNION PACIFIC SAFETY SECURITY SERVICE SIGNAL DESIGN	DES: SSC	UNION PACIFIC RAILROAD	DATE 06-21-07
	D. A. LAST LEVEL CHECKED	DP		DIG: SSC	MARENGO, ILLINOIS	SHEET 5
	LAST LEVEL MOD THIS TYPICAL	DP		CHK: GRK	HIGHWAY CROSSING SIGNALS	DWG 66.20
	LAST LEVEL BY DESIGNER	DP		A.F.E. 84098	CONTROL CIRCUITS	BEV
	CHANGED FROM TYPICAL?	Y		ID= BEV6620.5X	Omaha, Nebraska	

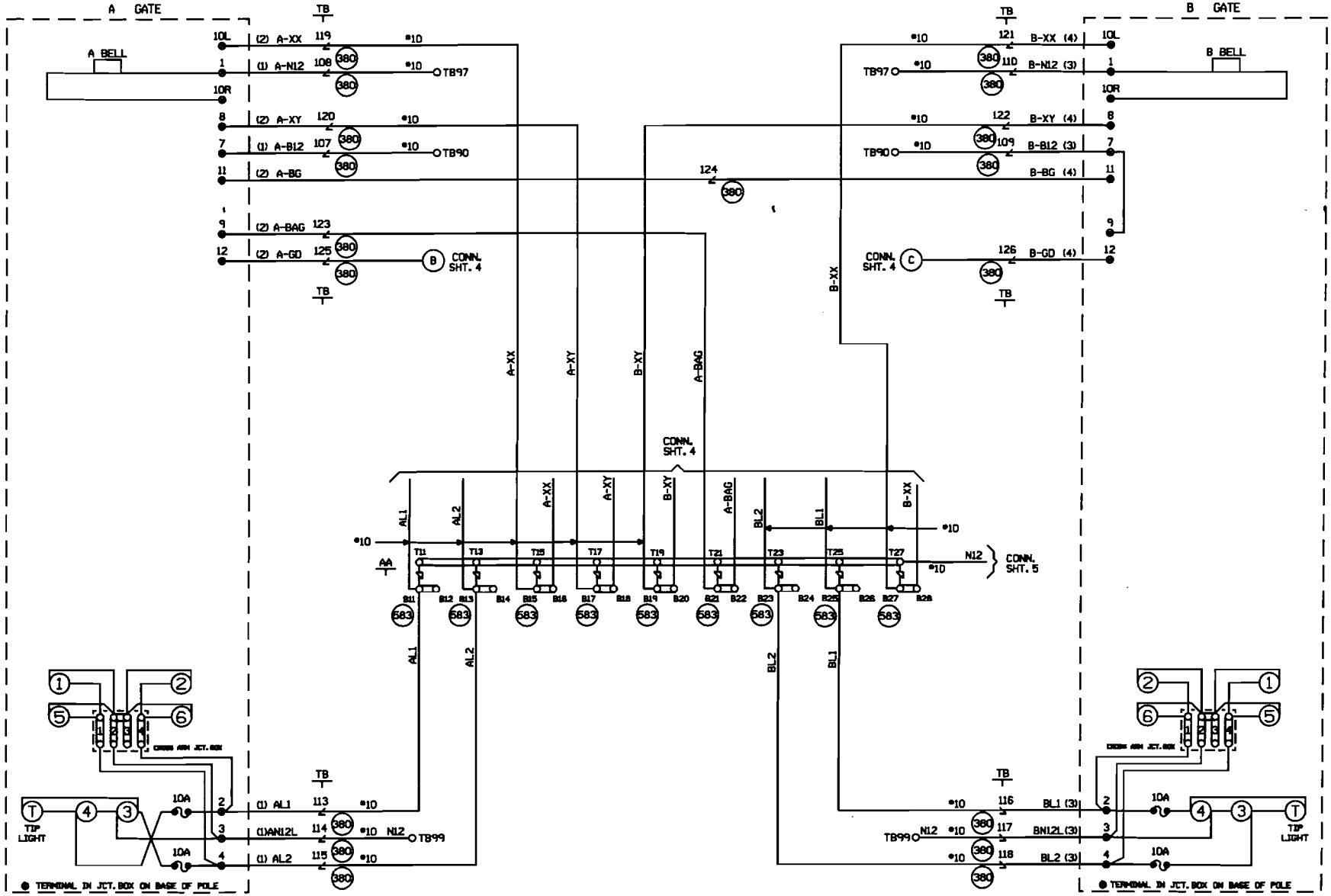

CABLE TABULATION

CABLE NO. 1 5C. NO.6 U.G.B.T.
CABLE NO. 2 7C. NO.14 U.G.B.T.
CABLE NO. 3 5C. NO.6 U.G.B.T.
CABLE NO. 4 7C. NO.14 U.G.B.T.

NEW SHEET

MARENGO, ILLINOIS
STATE STREET
M.P. 66.20
BELVIDERE SUBDIVISION
D.O.T.#174 572G

05-21-07 INSTALL FLASHERS AND GATES WITH CWT AT M.P. 66.20	
AFE 84098 GRK SSC/JJF	

MODIFICATION LEVEL

Q.A. LAST LEVEL CHECKED	DP
LAST LEVEL MOD THIS TYPICAL	DP
LAST LEVEL BY DESIGNER	DP
CHANGED FROM TYPICAL?	Y

UNION PACIFIC SIGNAL DESIGN

DES:	SSC
DIG:	SSC
CHK:	GRK
A.F.E.	84098
ID=	BEV8620.5X

UNION PACIFIC RAILROAD

MARENGO, ILLINOIS
HIGHWAY CROSSING SIGNALS
CONTROL CIRCUITS

Office of AVP Engineering - Design Omaha, Nebraska

DATE	05-21-07
SHEET	6
DWG	66.20
	BEV

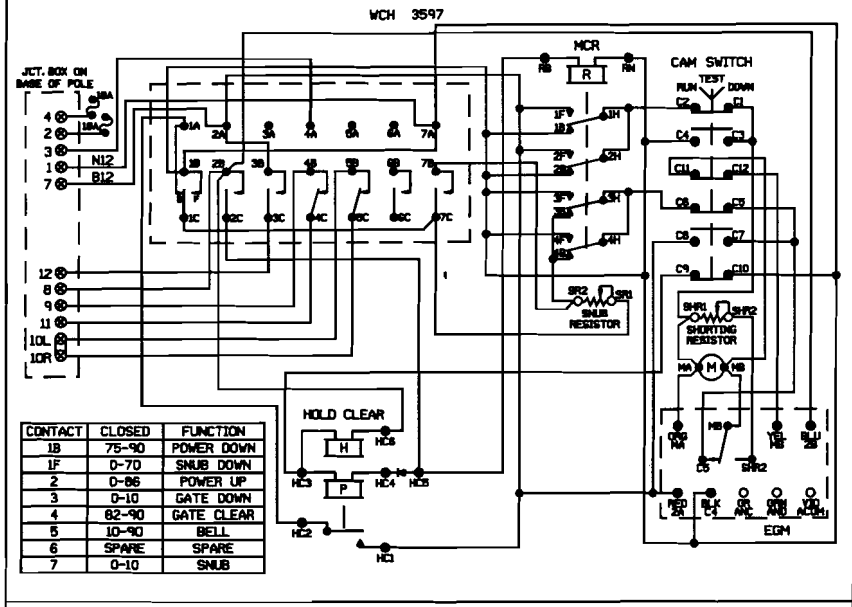

CONTACT	CLOSED	FUNCTION
1B	75-90	POWER DOWN
1F	0-70	SNUB DOWN
2	0-86	POWER UP
3	0-10	GATE DOWN
4	82-90	GATE CLEAR
5	10-90	BELL
6	SPARE	SPARE
7	0-10	SNUB

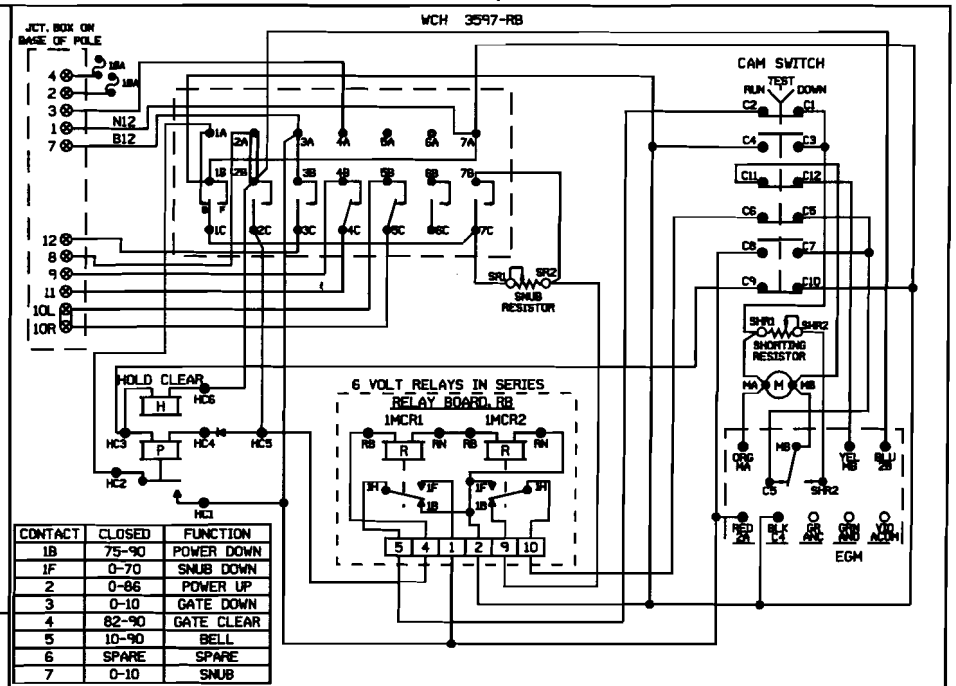

CONTACT	CLOSED	FUNCTION
1B	75-90	POWER DOWN
1F	0-70	SNUB DOWN
2	0-86	POWER UP
3	0-10	GATE DOWN
4	82-90	GATE CLEAR
5	10-90	BELL
6	SPARE	SPARE
7	0-10	SNUB

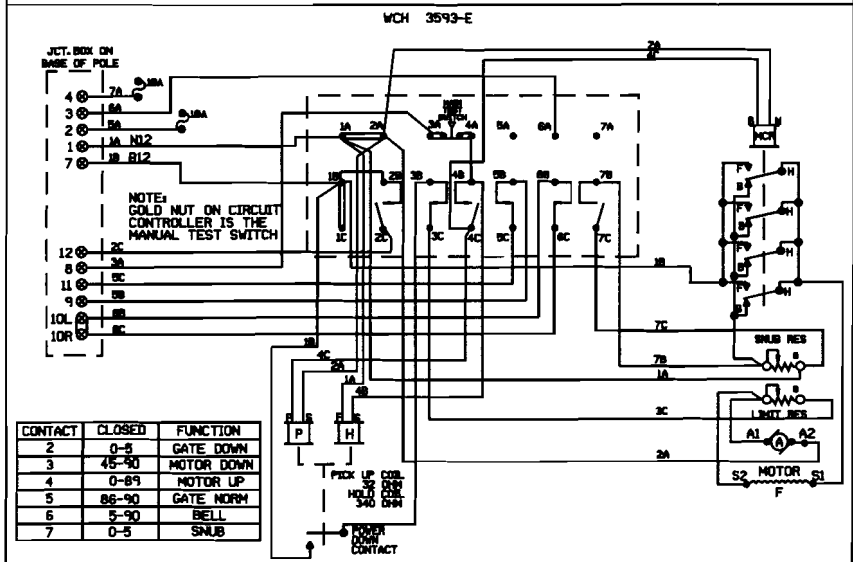

CONTACT	CLOSED	FUNCTION
2	0-5	GATE DOWN
3	45-90	MOTOR DOWN
4	0-89	MOTOR UP
5	86-90	GATE NORM
6	5-90	BELL
7	0-5	SNUB

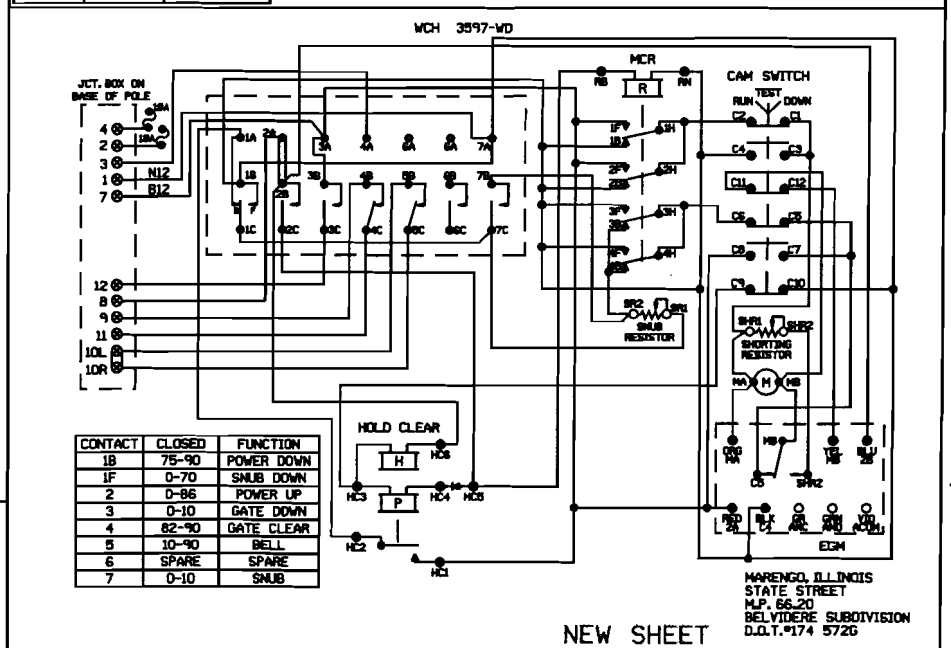

CONTACT	CLOSED	FUNCTION
1B	75-90	POWER DOWN
1F	0-70	SNUB DOWN
2	0-86	POWER UP
3	0-10	GATE DOWN
4	82-90	GATE CLEAR
5	10-90	BELL
6	SPARE	SPARE
7	0-10	SNUB

SHOW TYPE MECH. INSTALLED

ALL MECHANISMS SHOWN IN THE CLEAR POSITION

JCT. BOX ON BASE POLE

L	R	L	R
1	1	1	1
2	2	2	2
3	3	3	3
4	4	4	4
5	5	5	5
6	6	6	6
7	7	7	7

MARENGO, ILLINOIS
STATE STREET
M.P. 66.20
BELVIDERE SUBDIVISION
D.O.T.#174 572G

NEW SHEET

06-21-07
INSTALL FLASHERS AND GATES WITH CWT AT M.P. 66.20

AFE 84098 GRK
SSC/JJF

MODIFICATION LEVEL	
Q.A. LAST LEVEL CHECKED	DP
LAST LEVEL MOD THIS TYPICAL	DP
LAST LEVEL BY DESIGNER	DP
CHANGED FROM TYPICAL?	N

UNION PACIFIC
SAFETY PRODUCTIVITY SERVICE
SIGNAL DESIGN

DES: SSC
DRG: SSC
CHK: GRK
A.F.E.: 84098
ID: BEV6620.7X

UNION PACIFIC RAILROAD

MARENGO, ILLINOIS
HIGHWAY CROSSING SIGNALS
CONTROL CIRCUITS

Offices of AVP Engineering - Omaha, Omaha, Nebraska

DATE 06-21-07
SHEET 7
DWG 66.20
BEV

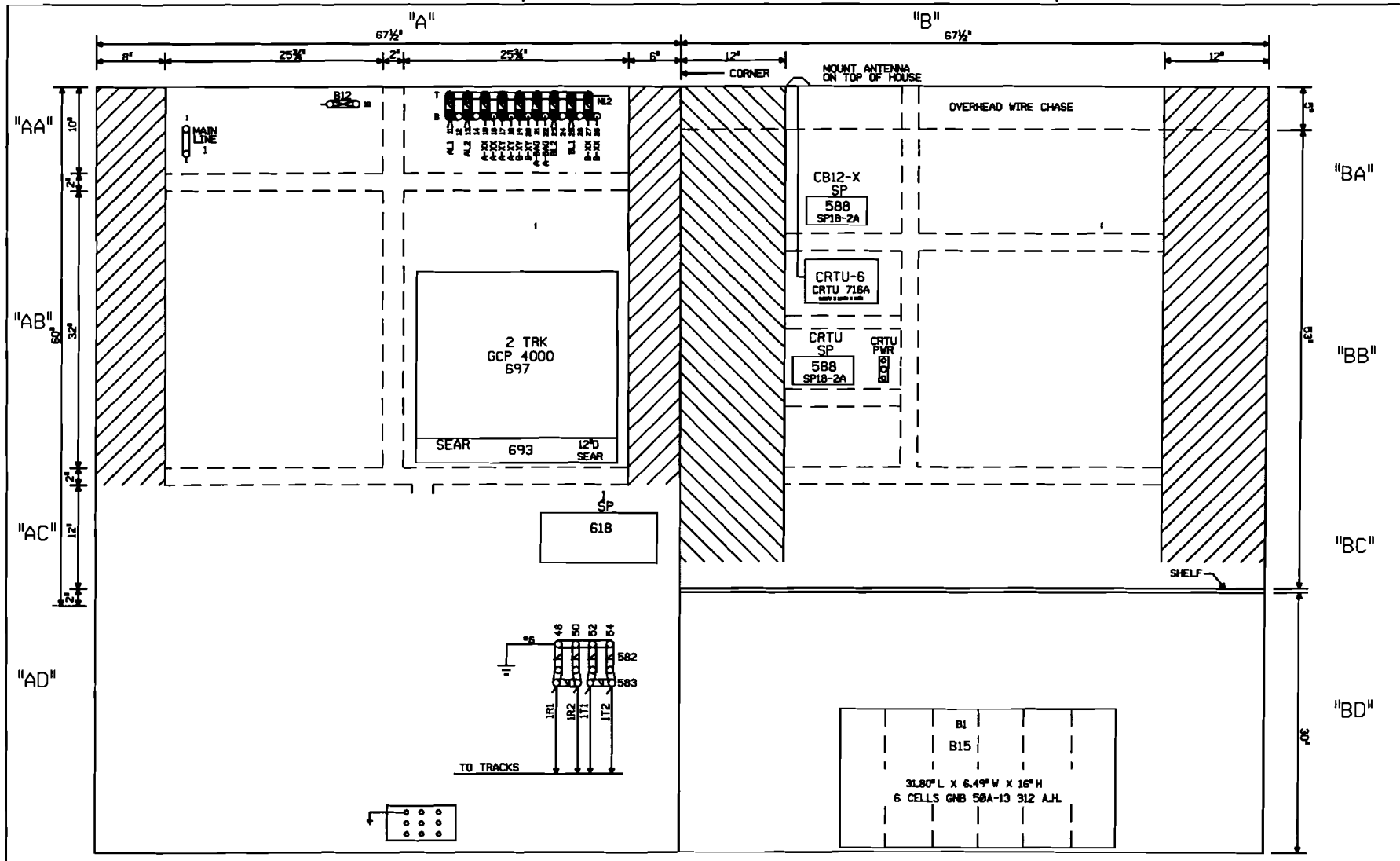

NOTE: ALL DIMENSIONS SHOWN ARE APPROXIMATE.

0 1 2 3 4 FEET

SCALE: 1.5 INCHES = 1 FOOT

NEW SHEET

MARENGO, ILLINOIS
STATE STREET
M.P. 66.20
BELVIDERE SUBDIVISION
D.O.T.#174 572G

05-21-07 INSTALL FLASHERS AND GATES WITH CWT AT M.P. 66.20 AFE 84098 DRK SSC/JJF	MODIFICATION LEVEL		UNION PACIFIC SIGNAL DESIGN	DES: SSC DWG: SSC CHK: GRK A.F.E. 84098 ID: BEV6620.8X	UNION PACIFIC RAILROAD MARENGO, ILLINOIS HIGHWAY CROSSING SIGNALS CONTROL CIRCUITS Office of AVP Engineering - Design Omaha, Nebraska	DATE 05-21-07 SHEET 8 DWG 66.20 BEV
	Q.A. LAST LEVEL CHECKED	DP				
	LAST LEVEL MOD THIS TYPICAL	DP				
	LAST LEVEL BY DESIGNER	DP				
	CHANGED FROM TYPICAL?	Y				

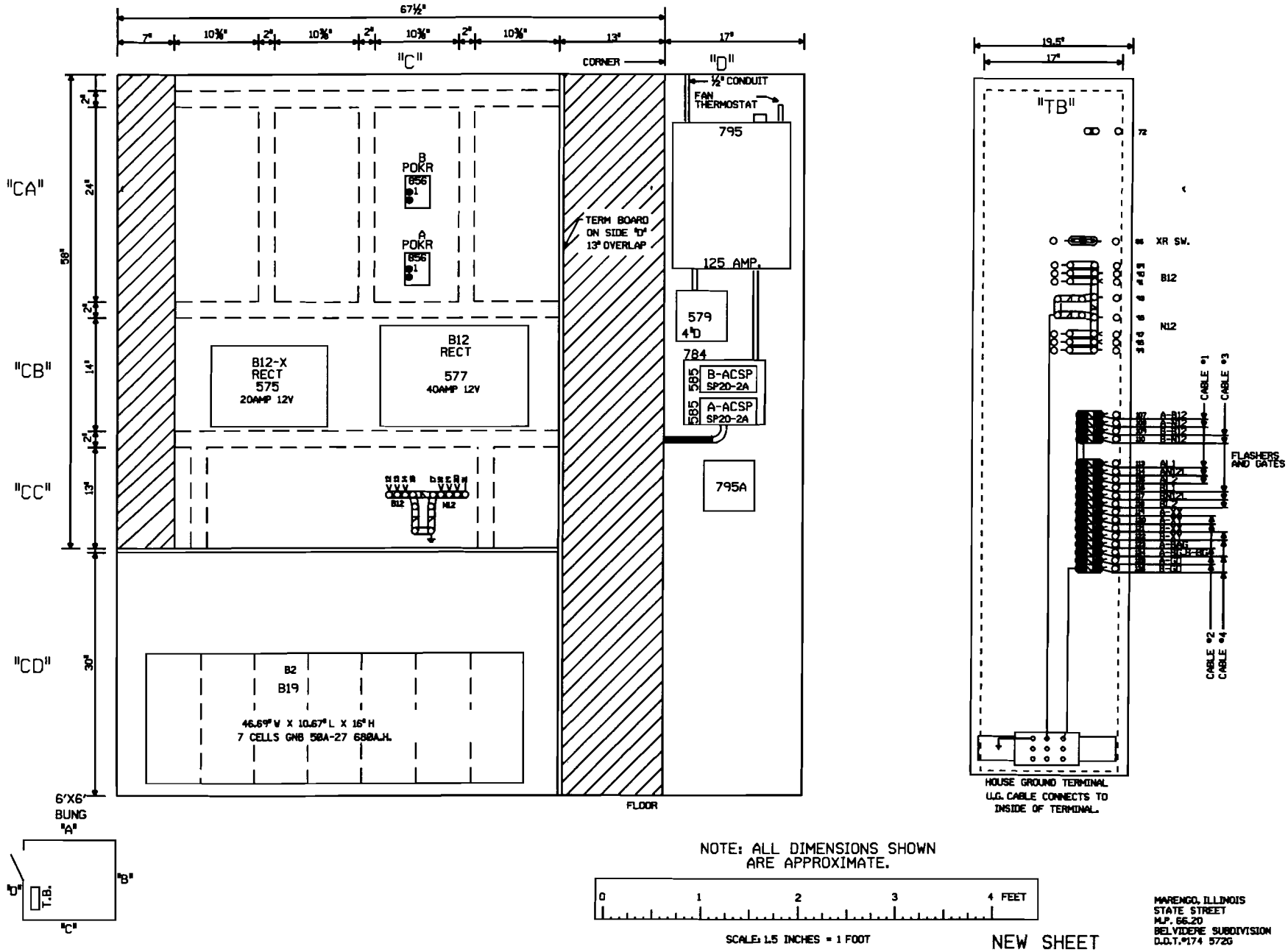

05-21-07 INSTALL FLASHERS AND GATES WITH CWT AT M.P. 66.20 AFE 84098 GRK SSC/JJF	MODIFICATION LEVEL D.A. LAST LEVEL CHECKED DP LAST LEVEL MOD THIS TYPICAL DP LAST LEVEL BY DESIGNER DP CHANGED FROM TYPICAL? Y	UNION PACIFIC SIGNAL DESIGN	DES: SSC DIG: SSC CHK: GRK A.F.E. 84098 ID: BEV6620.9X	UNION PACIFIC RAILROAD MARENGO, ILLINOIS HIGHWAY CROSSING SIGNALS CONTROL CIRCUITS Office of AVP Engineering - Design Omaha, Nebraska	DATE 05-21-07 SHEET 9 DWG 66.20 BEV		

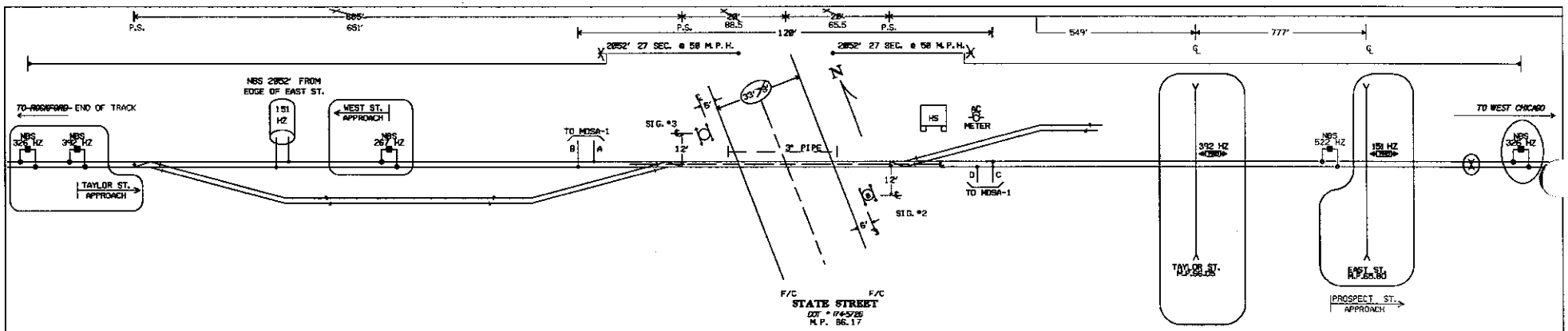

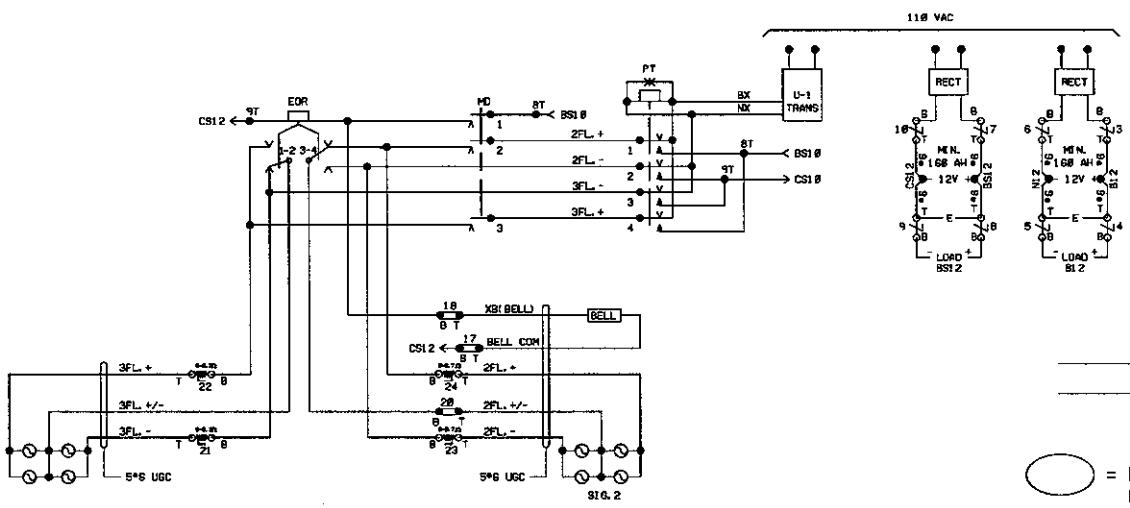

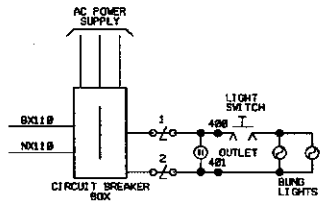

= IN

= OUT

CTC/JED

= EXISTING, REVISE ORIGINAL IF A.C.'d

~ NOTES ~

1. HIGH SINGLE TO BE A MINIMUM OF 25' FROM CENTERLINE OF TRACK AND 30' FROM EDGE OF ROADWAY.
2. THE C-PT HAVE HEAVY-DUTY CONTACTS.
3. ADJUST LIGHT CIRCUITS (AC & DC) TO OBTAIN A MIN. OF 9.2 VOLTS TO A MAX OF 9.8 VOLTS AT LAMPS.
4. THE PT WILL OPERATE ON 10-15 VOLT AC.
5. FLASHER VARIABLE RES. UNITS TO BE 0.7 OHMS.
6. USE 10 VOLT-25 WATT LAMPS.
7. USE #10 STRANDED WIRE ON FLASHER CIRCUITS.
8. PLANVIEW NOT TO SCALE.
9. F/C = FACE OF CURB.
10. PMD-1 FREQ. 328 HZ
    ISLAND CARRIER FREQ. 4.4 KHZ
    ISLAND SUBTONE FREQ. 45 HZ

REVISIONS

7-31-89	MMK
REV. PER CHANGES TO PMD-1 MOTION DETECTORS	
8-22-91	GRF
REV. PER F.C. OF 10-9-90 BY CDS INSTALLED MOTION	
REV.	4/2/96
SPEED UPGRADE W.O. 17985	2/96 JMM/HAR/ABS
4	5-25-00
INSTALL NEW X-ING AT PROSPECT ST. M.P. 65.80 A.F.E.# 34777	DPA / /CTC/JNM

UNION PACIFIC

QUALITY PRODUCTIVITY SAFETY

SIGNAL DESIGN

MARENGO, IL.
STATE STREET
M.P. 66.17

MATCH TO: BEV06665.00C

BEV06617.00C

MATCH TO: BEV06605.00C

SYSTEM#TIME#######

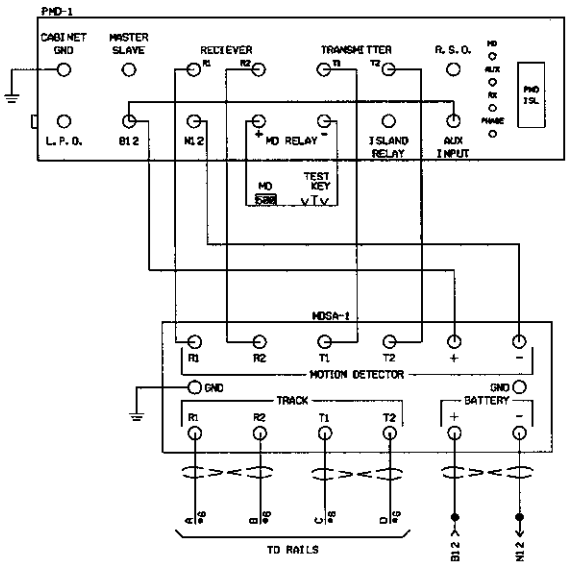

PMD-1 ( ) SWITCH OPTION TABLE

	MASTER-SLAVE	TRACK DRIVE	OVERRIDE
NORMAL	SLAVE / MASTER	LOW / HIGH	ON / OFF

PMD-1 ( ) FREQ. --- 326HZ
ISLAND CARRIER FREQ. --- 4.4KHZ
ISLAND SUBTONE FREQ. --- 45 HZ

WIRING REQUIREMENTS

THE FOLLOWING WIRE GAUGES WILL BE CONSIDERED THE MINIMUM ACCEPTABLE FOR PROPER OPERATION.

POWER LEADS	* 16 (MUST BE TWISTED)
CONNECTIONS FROM PMD CABINET TO MDSA-1	* 14 AWG (WIRES ON TERMS R1, R2 T1 & T2 MUST BE TWISTED.)
TRACK LEADS	* 6 AWG (ALL WIRES MUST BE TWISTED & WELDED.)
RELAY OUTPUT & AUXILIARY INPUT	* 20 (MUST BE TWISTED)
GROUND WIRE FROM MDSA-1 TO CASE	*6 AWG DIRECTLY TO PRIME GROUND TERMINALS (NO SHARP BENDS)

REVISIONS

7-31-89 REV. PER CHANGES TO PMD-1 MOTION DETECTORS	MAK
8-22-91 REV. PER F.C. OF 10-4-90 BY CDS INSTALLED MOTION	DSF
REV. 4/12/96 SPEED UPGRADE W.O. 17985	2/96 JWW/WAR/ABS
4	5-26-00
M.P. 66.00 A.F.E.# 34777	DPA /CTC/JNK

UNION PACIFIC
QUALITY PRODUCTIVITY SAFETY
SIGNAL DESIGN

MARENGO, IL.
STATE STREET
M.P. 66.17

BEV06617.01C

SYSTEM#TIME#####