12

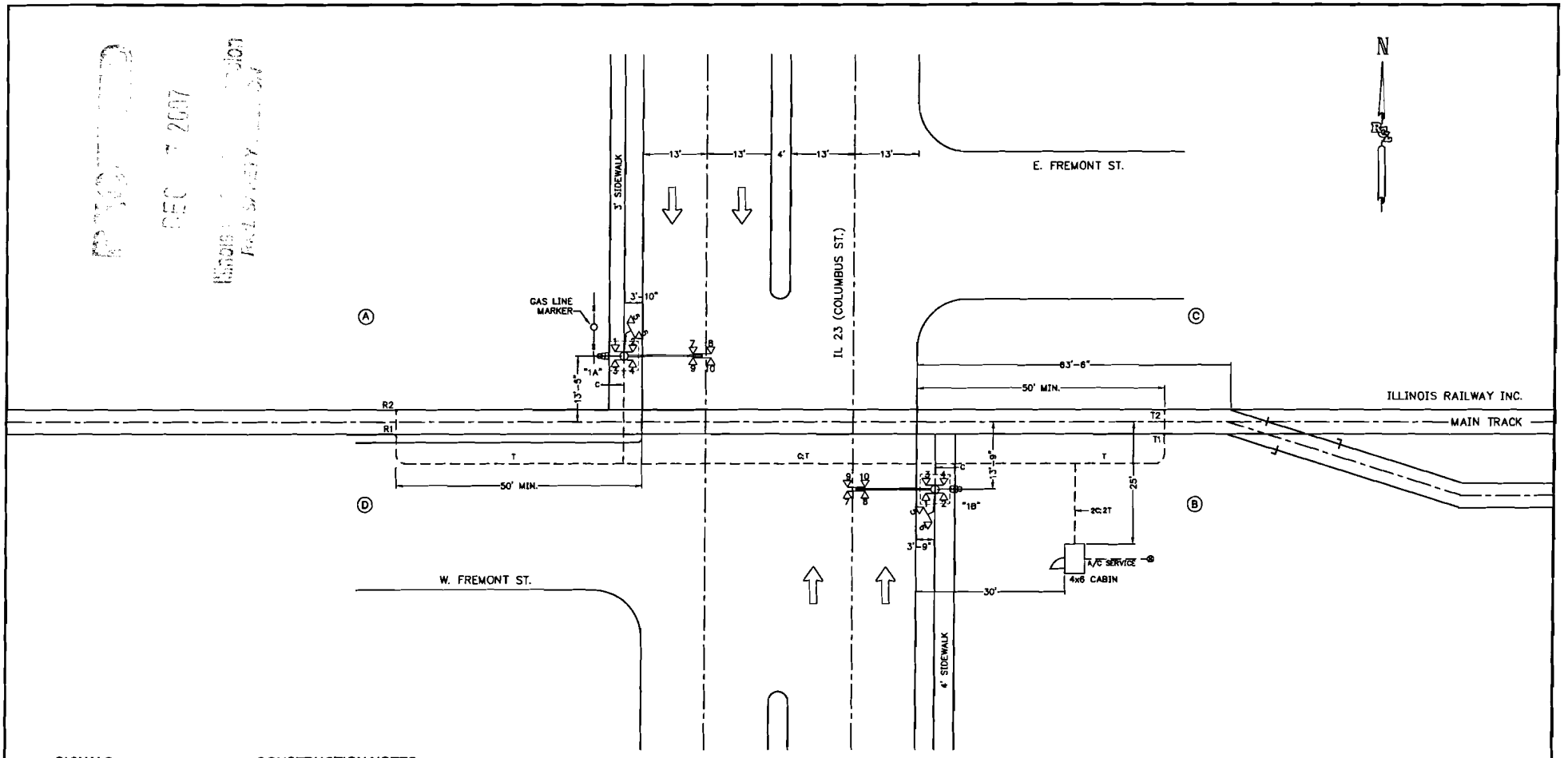

SIGNALS:

ALL LIGHTS TO BE L.E.D.
CANT "1A" = EXISTING
CANT "1B" = EXISTING

CABLE RUNS:

1. C = 5C#6
2. T = 2C#6

CONSTRUCTION NOTES:

1. RETRO-FIT EXISTING CANTILEVER LIGHTS WITH L.E.D.'s
2. APPROACHES TO BE BONDED MIN. 100' PAST SHUNTS

SCOPE OF WORK:

INSTALL FLASHING LIGHTS & GATES, 4X6 BUNGALOW WITH CONSTANT WARNING CIRCUITRY. INSTALLATION TO INCLUDE NEW CABLE, BATTERIES, POWER TAP, AND NARROW BAND SHUNTS.
REMOVE EXISTING WARNING SYSTEM.

LEGEND:

= BELL

= SIGNAL FOUNDATION

ORIGINAL DATE 05/27/05	RCL Railroad Controls Limited	ILLINOIS RAILWAY	
DRAFTSMAN RCL	LOCATION IL 23 (COLUMBUS ST.) OTTAWA, IL ILLINOIS RAILWAY		
DESIGNER RCL			
CHECKER RCL			
	TITLE SITE LAYOUT		
REVISION A 11-12-07 SIGNAL SHOP REV.	SUB OTTAWA	RRMP 80.02	DOT NO. 065 101S
	RCL NO. A2759	SCALE 1"=20'	SHEET 1 OF 12

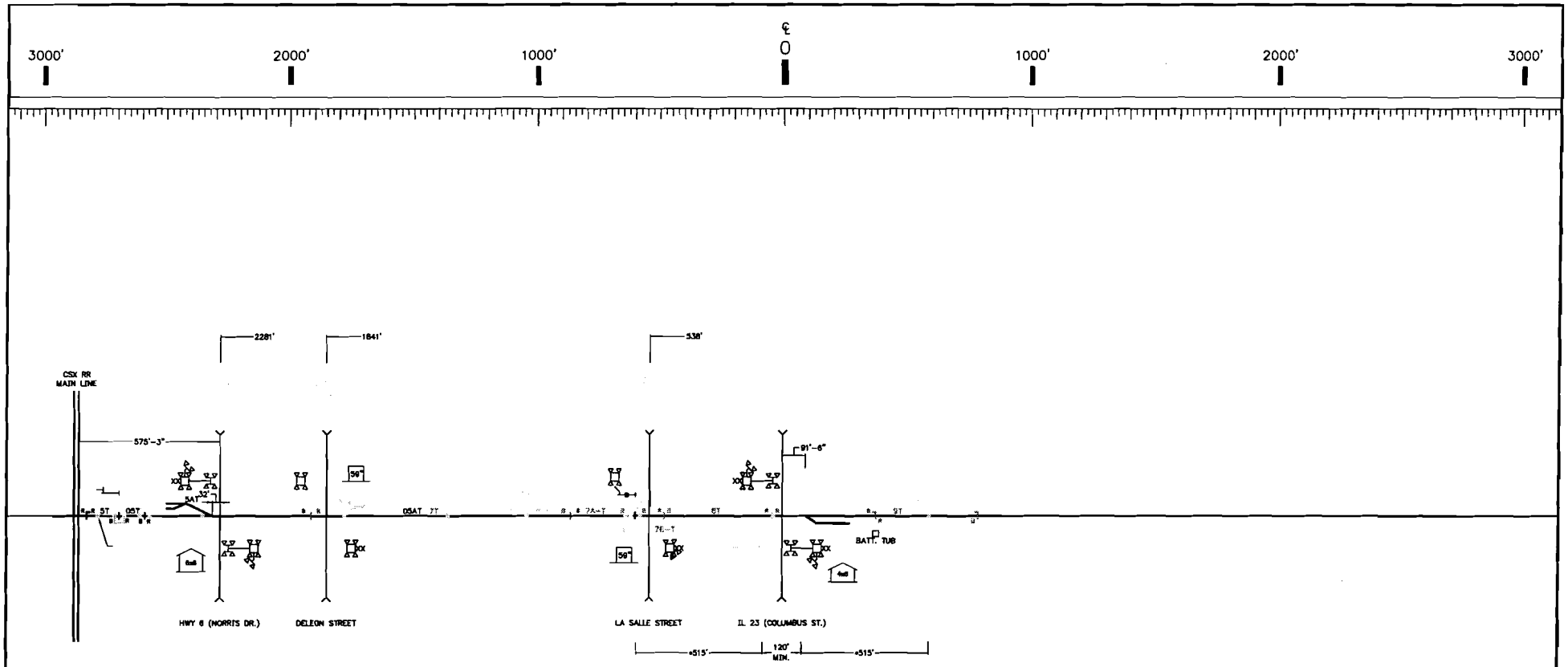

IL 23 (COLUMBUS ST)

MINIMUM WARNING TIME	
MINIMUM	20 SEC.
CLEARANCE	0 SEC.
MWT	20 SEC.

TOTAL WARNING TIME	
MIN. WARNING	20 SEC.
BUFFER	5 SEC.
TWT	25 SEC.

TOTAL APPROACH TIME	
TOTAL WARNING	25 SEC.
EQUIP. RESPONSE	10 SEC.
ADV. PREMPTION	N/A
TAT	35 SEC.

* BASED ON TRAIN SPEED OF 10 M.P.H.

NOTE:
REFER TO CONSTANT WARNING SET UP SHEET
FOR PROPER WARNING TIME CALCULATION.

LEGEND:

- RED OUT
- BLACK EXISTING
- PURPLE TAG CHANGE

ORIGINAL DATE	05/27/05	RCL Railroad Controls Limited	ILLINOIS RAILWAY
DRAFTSMAN	RCL	LOCATION	IL 23 (COLUMBUS ST.) OTTAWA, IL ILLINOIS RAILWAY
DESIGNER	RCL		
CHECKER	RCL		
		TITLE	LINE PLAN
REVISION A	11-12-07 SIGNAL SHOP REV.	SUB OTTAWA	RR&P 80.02 / DOT NO. 065 101S
		RCL NO. A2759	SCALE 1"=400' / SHEET 2 OF 12

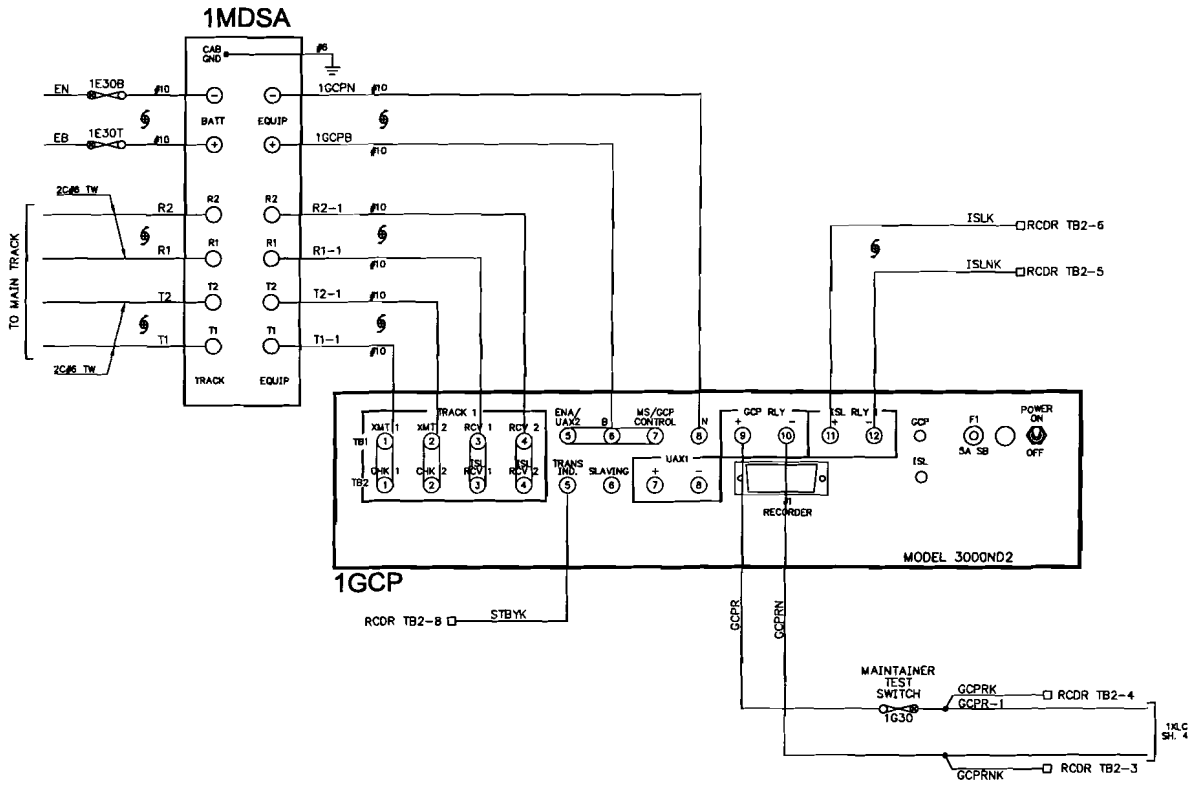

LEGEND

⊿ = EQUALIZER
∠ = LIGHTING ARRESTER
§ = TWISTED WIRE
○ = INSULATED CAP
● = GOLD NUT
⏚ = GROUND

ORIGINAL DATE 05/27/05	RCL Railroad Controls Limited	ILLINOIS RAIL AGENCY	
DRAFTSMAN RCL	LOCATION IL 23 (COLUMBUS ST.) OTTAWA, IL ILLINOIS RAILWAY		
DESIGNER RCL			
CHECKER RCL			
CHANGE FROM TYPICAL: Y	TITLE CROSSING CONTROL CIRCUITS		
REVISION A 11-12-07 SIGNAL SHOP REV.	SUB OTTAWA	RRMP 80.02	DOT NO. 065 101S
	RCL NO. A2759	SCALE N.T.S.	SHEET 3 OF 12

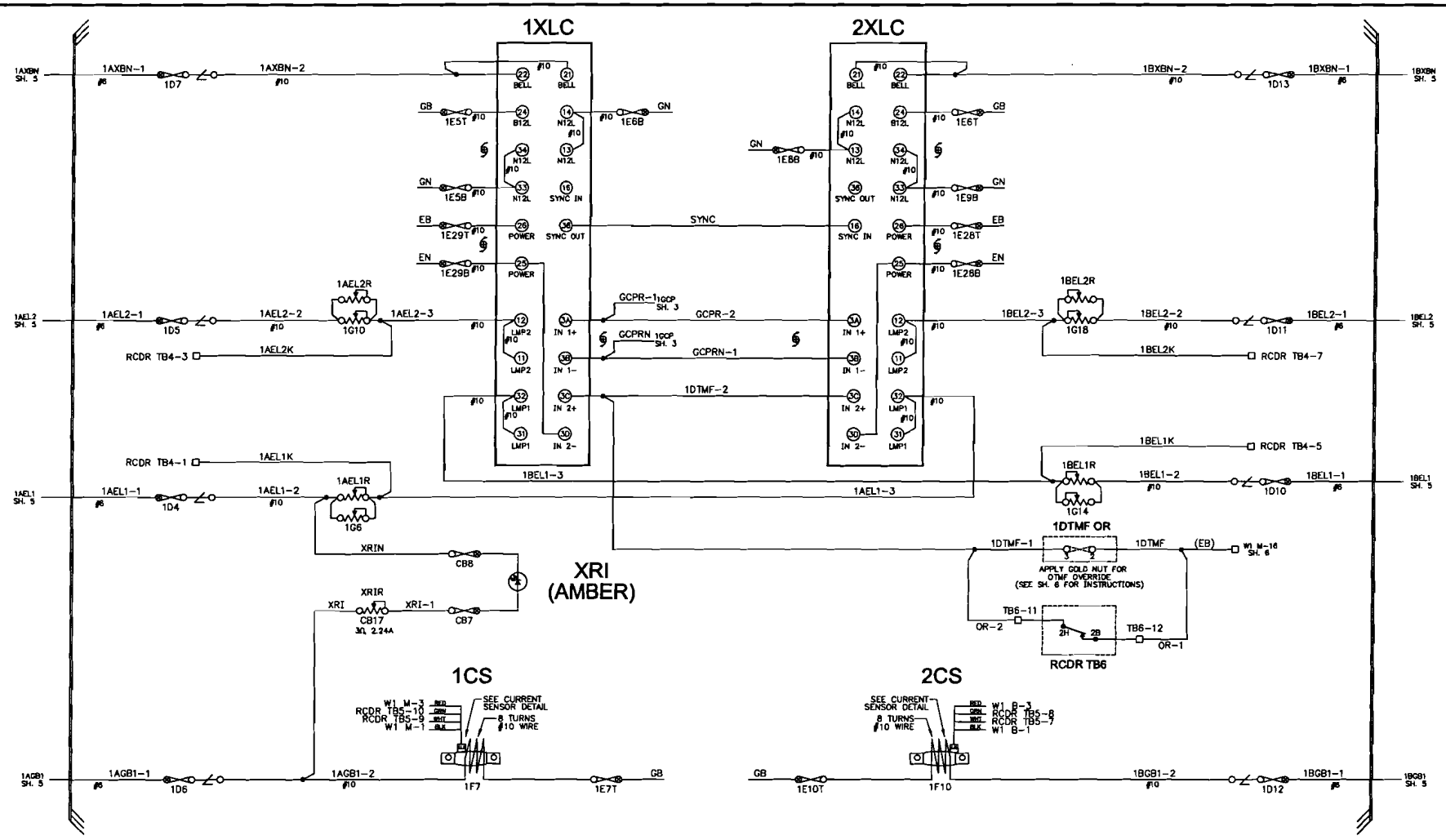

NOTES:

1. ALL LAMP RESISTORS ARE 1Ω, 3.87A UNLESS OTHERWISE NOTED

DETAIL
CURRENT SENSOR
CONNECTOR

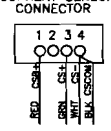

4 COND CABLE
TO SENSOR
PART NO NAS CS100 CABLE

ORIGINAL DATE 05/27/05	RCL Railroad Controls Limited	ILLINOIS RAILWAY	
DRAFTSMAN RCL	LOCATION IL 23 (COLUMBUS ST.) OTTAWA, IL ILLINOIS RAILWAY		
DESIGNER RCL			
CHECKER RCL			
CHANGE FROM TYPICAL: Y	TITLE CROSSING CONTROL CIRCUITS		
REVISION A 11-12-07 SIGNAL SHOP REV.	SUB OTTAWA	RRMP 80.02	DOT NO. 065 101S
	RCL NO. A2759	SCALE N.T.S.	SHEET 4 OF 12

SIGNAL 1A

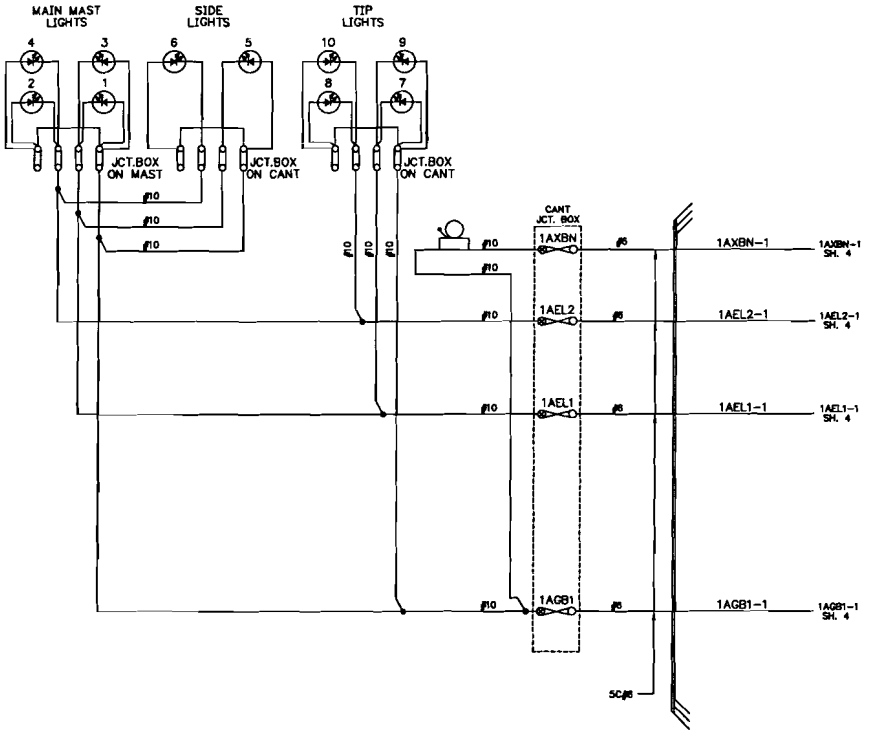

SIGNAL 1B

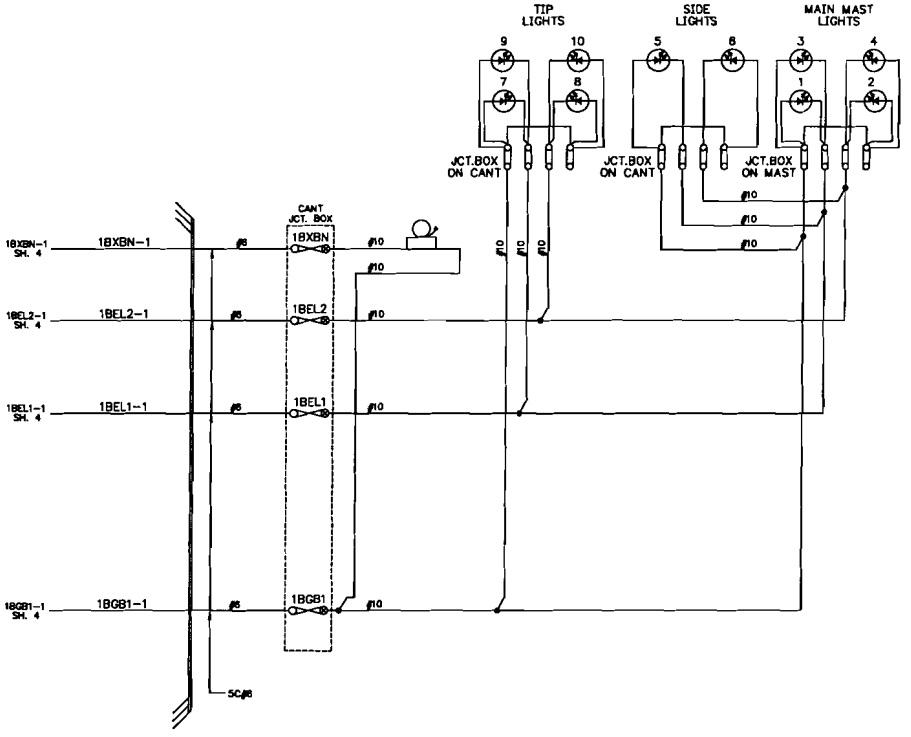

ORIGINAL DATE 05/27/05		RCL Railroad Controls Limited	ILLINOIS RAILWAY
DRAFTSMAN	RCL	LOCATION IL 23 (COLUMBUS ST.) OTTAWA, IL ILLINOIS RAILWAY	
DESIGNER	RCL		
CHECKER	RCL		
		TITLE CANTILEVER CIRCUITS	
REVISION A	11-12-07 SIGNAL SHOP REV.	SUB OTTAWA	RRMP 80.02	DOT NO. 065 101S
		RCL NO. A2759	SCALE N.T.S.	SHEET 5 OF 12

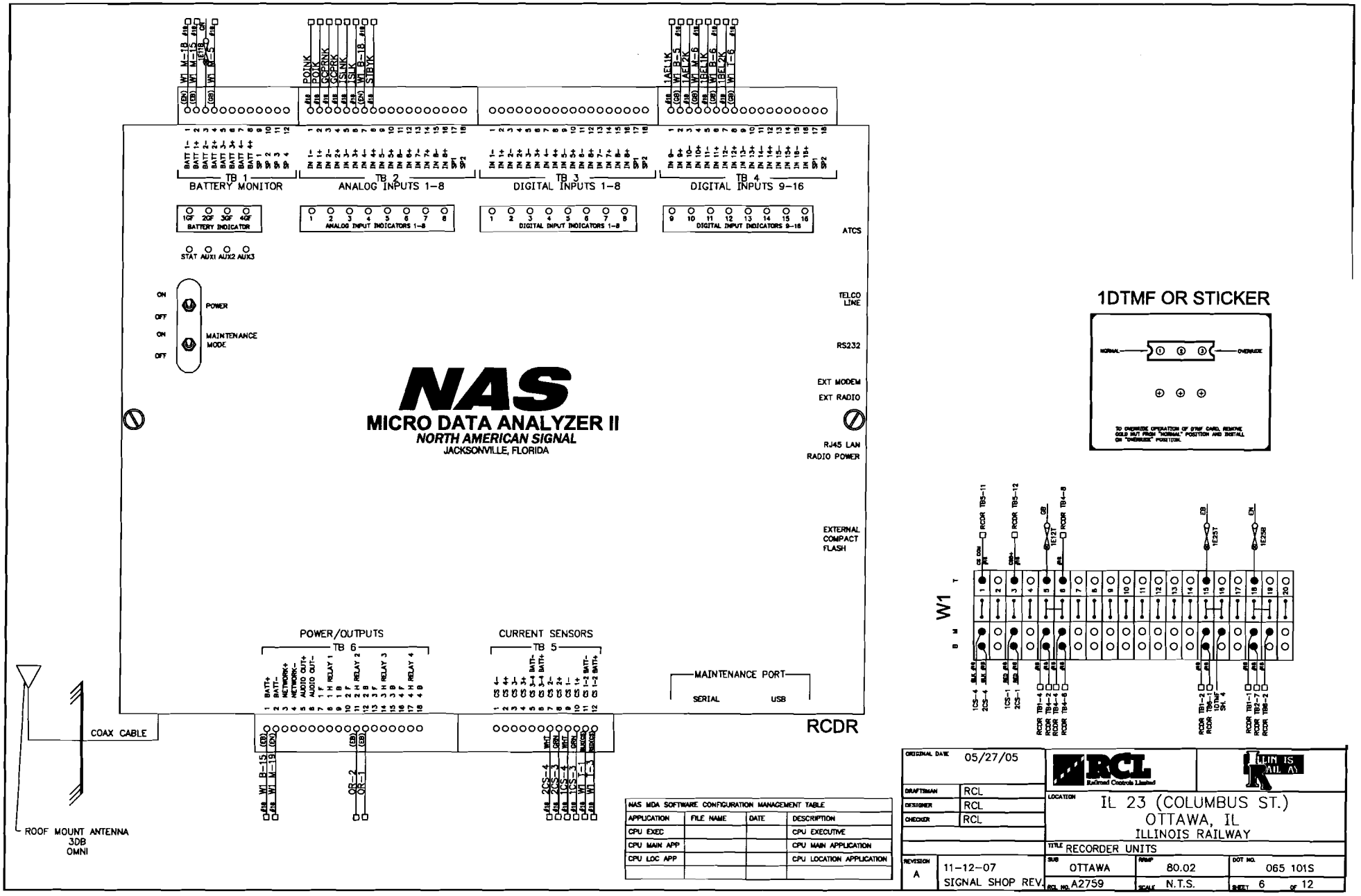

NAS MDA SOFTWARE CONFIGURATION MANAGEMENT TABLE			
APPLICATION	FILE NAME	DATE	DESCRIPTION
CPU EXEC			CPU EXECUTIVE
CPU MAIN APP			CPU MAIN APPLICATION
CPU LOC APP			CPU LOCATION APPLICATION

ORIGINAL DATE	05/27/05	RCL Railroad Controls Limited	ILLINOIS RAILWAY
DRAFTSMAN	RCL	LOCATION	IL 23 (COLUMBUS ST.) OTTAWA, IL ILLINOIS RAILWAY
DESIGNER	RCL		
CHECKER	RCL	TITLE	RECORDER UNITS
REVISION A	11-12-07 SIGNAL SHOP REV.	SUB OTTAWA	RAMP 80.02 / DOT NO. 065 101S
		RCL NO. A2759	SCALE N.T.S. / SHEET 6 OF 12

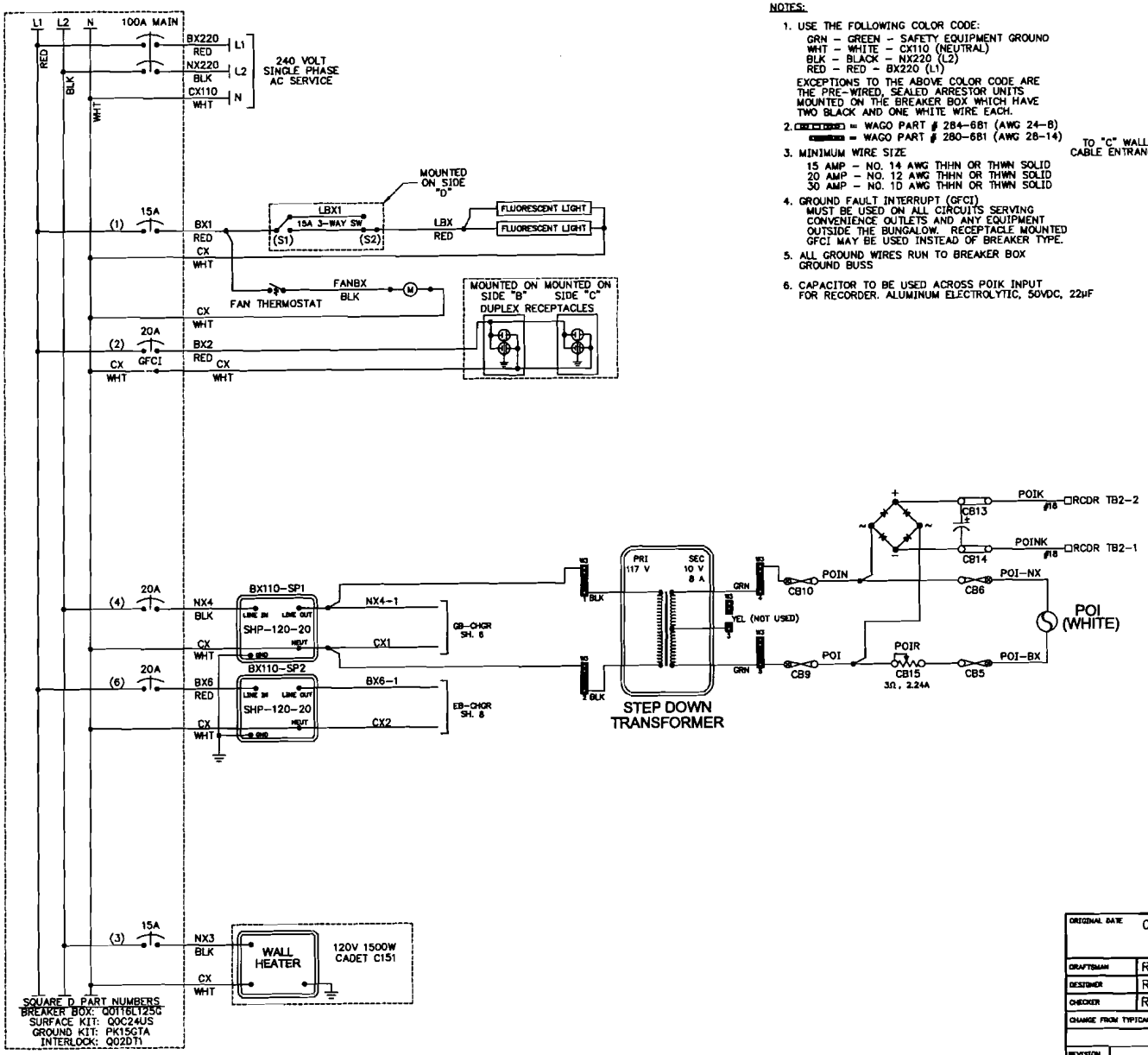

NOTES:

1. USE THE FOLLOWING COLOR CODE:
   GRN – GREEN – SAFETY EQUIPMENT GROUND
   WHT – WHITE – CX110 (NEUTRAL)
   BLK – BLACK – NX220 (L2)
   RED – RED – BX220 (L1)
   EXCEPTIONS TO THE ABOVE COLOR CODE ARE THE PRE-WIRED, SEALED ARRESTOR UNITS MOUNTED ON THE BREAKER BOX WHICH HAVE TWO BLACK AND ONE WHITE WIRE EACH.
2. = WAGO PART # 284-681 (AWG 24-8)
   = WAGO PART # 280-681 (AWG 28-14)
3. MINIMUM WIRE SIZE
   15 AMP – NO. 14 AWG THHN OR THWN SOLID
   20 AMP – NO. 12 AWG THHN OR THWN SOLID
   30 AMP – NO. 10 AWG THHN OR THWN SOLID
4. GROUND FAULT INTERRUPT (GFCI) MUST BE USED ON ALL CIRCUITS SERVING CONVENIENCE OUTLETS AND ANY EQUIPMENT OUTSIDE THE BUNGALOW. RECEPTACLE MOUNTED GFCI MAY BE USED INSTEAD OF BREAKER TYPE.
5. ALL GROUND WIRES RUN TO BREAKER BOX GROUND BUSS
6. CAPACITOR TO BE USED ACROSS POIK INPUT FOR RECORDER. ALUMINUM ELECTROLYTIC, 50VDC, 22µF

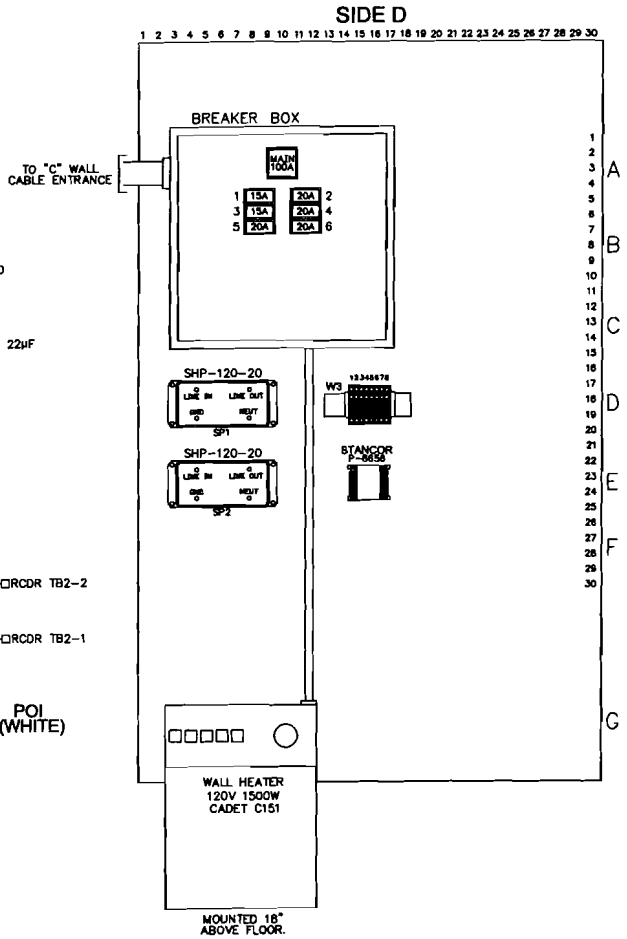

ORIGINAL DATE 05/27/05	RCL Railroad Controls Limited	ILLINOIS RAILWAY	
DRAFTSMAN RCL	LOCATION IL 23 (COLUMBUS ST.) OTTAWA, IL ILLINOIS RAILWAY		
DESIGNER RCL			
CHECKER RCL			
CHANGE FROM TYPICAL: Y	TITLE POWER CIRCUITS		
REVISION A 11-12-07 SIGNAL SHOP REV.	SUB OTTAWA	RRMP 80.02	DOT NO. 065 101S
	RCL NO. A2759	SCALE N.T.S.	SHEET 7 OF 12

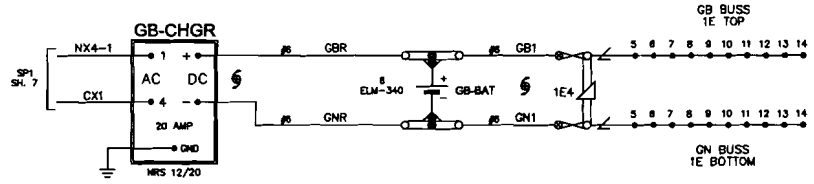

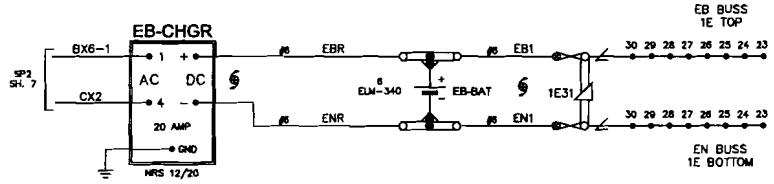

NOTE:

1. BATTERY CHARGER TAP SETTING TO BE SET FOR 115 VAC.

ORIGINAL DATE 05/27/05	RCL Railroad Controls Limited	ILLINOIS RAILWAY	
DRAFTSMAN RCL	LOCATION IL 23 (COLUMBUS ST.) OTTAWA, IL ILLINOIS RAILWAY		
DESIGNER RCL			
CHECKER RCL			
CHANGE FROM TYPICAL: Y	TITLE POWER CIRCUITS		
REVISION A — 11-12-07 SIGNAL SHOP REV.	SUB OTTAWA	TRMP 80.02	DOT NO. 065 101S
	RQ. NO. A2759	SCALE N.T.S.	SHEET 8 OF 12

3000 GCP APPLICATION HISTORY CARD
(Units Equipped With Processor Module 80014, 80044 or 80214)

Equipment: 3000ND2
Unit/Serial No.: _____ Crossing No.: 065 101S Crossing Name: IL 23 (COLUMBUS ST.)
City: OTTAWA State: IL
Weather Conditions: _____ Island Frequency: T1: §17.5 kHZ T2: _____ kHZ

PROGRAMMING HISTORY

	Initial Programmed Value Date:	Program Change Date:	Program Change Date:
NUMBER OF TRACKS (Number of transceiver Modules, 1 or 2)	1 ☒ 2 ☐	1 ☐ 2 ☐	1 ☐ 2 ☐
FREQUENCY (MS/GCP) **	T1: 753 Hz	Hz	Hz
	T2: Hz	Hz	Hz
UNIDIRECTIONAL/BIDIRECTIONAL	T1: UNI ☐ BI ☒	UNI ☐ BI ☐	UNI ☐ BI ☐
	T2: UNI ☐ BI ☐	UNI ☐ BI ☐	UNI ☐ BI ☐
XMIT LEVEL	T1: MAX ☐ MED ☒	MAX ☐ MED ☐	MAX ☐ MED ☐
	T2: MAX ☐ MED ☐	MAX ☐ MED ☐	MAX ☐ MED ☐
PREDICTOR/MOTION SENSOR	T1: PRED ☒ MS ☐	PRED ☐ MS ☐	PRED ☐ MS ☐
	T2: PRED ☐ MS ☐	PRED ☐ MS ☐	PRED ☐ MS ☐
WARNING TIME SELECTED	T1: 28 Sec.	Sec.	Sec.
	T2: N/A Sec.	Sec.	Sec.
APPROACH DISTANCE — SELECTED	T1: 560 Ft.	Ft.	Ft.
	T2: N/A Ft.	Ft.	Ft.
— COMPUTED	T1: Ft.	Ft.	Ft.
	T2: N/A Ft.	Ft.	Ft.
UAX1 PICKUP DELAY (UAX)(0 = OFF)	0 Sec.	Sec.	Sec.
ENA/UAX2 DELAY (0 = ENA)	0 Sec.	Sec.	Sec.
ISLAND DISTANCE (Between transmit & receive track wire connections)	T1: 150 Ft.	Ft.	Ft.
	T2: N/A Ft.	Ft.	Ft.
NUMBER OF DAX'S (For 3000ND and 3000ND2 units, set this item to 0)	0☒ 1☐ 2☐ 3☐ 4☐ 5☐ 6☐ 7☐ 8☐	0☐ 1☐ 2☐ 3☐ 4☐ 5☐ 6☐ 7☐ 8☐	0☐ 1☐ 2☐ 3☐ 4☐ 5☐ 6☐ 7☐ 8☐
DAX A TRACK ASSIGNMENT	T1: ☐ T2: ☐	T1: ☐ T2: ☐	T1: ☐ T2: ☐
DAX A DISTANCE (0 = Preempt)	Ft.	Ft.	Ft.
DAX A WARNING TIME	Sec.	Sec.	Sec.
DAX B TRACK ASSIGNMENT	T1: ☐ T2: ☐	T1: ☐ T2: ☐	T1: ☐ T2: ☐
DAX B DISTANCE (0 = Preempt)	Ft.	Ft.	Ft.
DAX B WARNING TIME	Sec.	Sec.	Sec.
DAX C TRACK ASSIGNMENT	T1: ☐ T2: ☐	T1: ☐ T2: ☐	T1: ☐ T2: ☐
DAX C DISTANCE (D = Preempt)	Ft.	Ft.	Ft.
DAX C WARNING TIME	Sec.	Sec.	Sec.
DAX D TRACK ASSIGNMENT	T1: ☐ T2: ☐	T1: ☐ T2: ☐	T1: ☐ T2: ☐
DAX D DISTANCE (0 = Preempt)	Ft.	Ft.	Ft.
DAX D WARNING TIME	Sec.	Sec.	Sec.
* DAX E TRACK ASSIGNMENT	T1: ☐ T2: ☐	T1: ☐ T2: ☐	T1: ☐ T2: ☐
* DAX E DISTANCE (0 = Preempt)	Ft.	Ft.	Ft.
* DAX E WARNING TIME	Sec.	Sec.	Sec.
* DAX F TRACK ASSIGNMENT	T1: ☐ T2: ☐	T1: ☐ T2: ☐	T1: ☐ T2: ☐
* DAX F DISTANCE (0 = Preempt)	Ft.	Ft.	Ft.
* DAX F WARNING TIME	Sec.	Sec.	Sec.
* DAX G TRACK ASSIGNMENT	T1: ☐ T2: ☐	T1: ☐ T2: ☐	T1: ☐ T2: ☐
* DAX G DISTANCE (0 = Preempt)	Ft.	Ft.	Ft.
* DAX G WARNING TIME	Sec.	Sec.	Sec.
* DAX H TRACK ASSIGNMENT	T1: ☐ T2: ☐	T1: ☐ T2: ☐	T1: ☐ T2: ☐
* DAX H DISTANCE (0 = Preempt)	Ft.	Ft.	Ft.
* DAX H WARNING TIME	Sec.	Sec.	Sec.

PROGRAMMING HISTORY

	Initial Programmed Value Date:	Program Change Date:	Program Change Date:
SLAVING MASTER/SLAVE	MASTER ☒ SLAVE ☐	MASTER ☐ SLAVE ☐	MASTER ☐ SLAVE ☐
PASSWORD ENABLED	DISABLED ☒	DISABLED ☐	DISABLED ☐
	ENABLED ☐	ENABLED ☐	ENABLED ☐
RECORDER INSTALLED	NOT INSTALLED ☒	NOT INSTALLED ☐	NOT INSTALLED ☐
	INSTALLED ☐	INSTALLED ☐	INSTALLED ☐
	EXTERNAL NODE#	EXTERNAL NODE#	EXTERNAL NODE#
RS-232-C BAUD RATE	9600 bps	bps	bps
RS-232-C DATA BITS	7 ☐ 8 ☒	7 ☐ 8 ☐	7 ☐ 8 ☐
RS-232-C STOP BITS	1 ☒ 2 ☐	1 ☐ 2 ☐	1 ☐ 2 ☐
RS-232-C PARITY	NONE ☒ MARK ☐	NONE ☐ MARK ☐	NONE ☐ MARK ☐
	ODD ☐ SPACE ☐	ODD ☐ SPACE ☐	ODD ☐ SPACE ☐
	EVEN ☐	EVEN ☐	EVEN ☐
DATE (e.g., MON 13 MAY 1991)			
TIME (e.g., 06:25:43 PM)			
DAYLIGHT SAVINGS	ON ☒ OFF ☐	ON ☐ OFF ☐	ON ☐ OFF ☐

EXPANDED PROGRAMMING HISTORY
(Function Mode)

	Initial Programmed Value Date:	Program Change Date:	Program Change Date:
‡LOW EZ DETECTION	T1: ON ☐ OFF ☒	T1: ON ☐ OFF ☐	T1: ON ☐ OFF ☐
	T2: ON ☐ OFF ☐	T2: ON ☐ OFF ☐	T2: ON ☐ OFF ☐
‡LOW EZ DETECTION TIMER (When low EZ detection is on)	T1: 0 Min.	T1: Min.	T1: Min.
	T2: 0 Min.	T2: Min.	T2: Min.
‡POSITIVE START (0 =OFF) (Enter EZ value)	T1: 0 EZ	T1: EZ	T1: EZ
	T2: 0 EZ	T2: EZ	T2: EZ
‡POSITIVE START TIMEOUT(0=NONE) (When positive start is on)	T1: 0 Min.	T1: Min.	T1: Min.
	T2: 0 Min.	T2: Min.	T2: Min.
‡SET AT OPERATION	NORMAL ☒	NORMAL ☐	NORMAL ☐
	DIAGNOSTIC ☐	DIAGNOSTIC ☐	DIAGNOSTIC ☐
● † DIAGNOSTIC MESSAGES	ON ☐ OFF ☐	ON ☐ OFF ☐	ON ☐ OFF ☐
● † DAX MESSAGES	ON ☐ OFF ☐	ON ☐ OFF ☐	ON ☐ OFF ☐
† ADVANCE PREEMPT TIMER	Sec.	Sec.	Sec.

EXPANDED PROGRAMMING HISTORY
(Function Mode)

	Initial Programmed Value Date:	Program Change Date:	Program Change Date:
SWITCH TO MS (Enter EZ value)	T1: 10 EZ	T1: EZ	T1: EZ
	T2: 0 EZ	T2: EZ	T2: EZ
TRANSFER DELY MS TO GCP(0 =OFF)	T1: 0 Sec.	T1: Sec.	T1: Sec.
	T2: 0 Sec.	T2: Sec.	T2: Sec.
PRIME PREDICTION OFFSET (0 =OFF)	T1: 0 Ft.	T1: Ft.	T1: Ft.
	T2: 0 Ft.	T2: Ft.	T2: Ft.
PICKUP DELAY PRIME	15 Sec.	Sec.	Sec.
PICKUP DELAY DAX A	0 Sec.	Sec.	Sec.
PICKUP DELAY OAX B	0 Sec.	Sec.	Sec.
PICKUP DELAY DAX C	0 Sec.	Sec.	Sec.
PICKUP DELAY DAX D	0 Sec.	Sec.	Sec.
* PICKUP DELAY DAX E	0 Sec.	Sec.	Sec.
* PICKUP DELAY DAX F	0 Sec.	Sec.	Sec.
* PICKUP DELAY DAX G	0 Sec.	Sec.	Sec.
* PICKUP DELAY DAX H	0 Sec.	Sec.	Sec.
COMPENSATION VALUE	T1: 1300	T1:	T1:
	T2: 0	T2:	T2:
# ENHANCED DETECTION (ED)	T1: ON ☐ OFF ☒	T1: ON ☐ OFF ☐	T1: ON ☐ OFF ☐
	T2: ON ☐ OFF ☐	T2: ON ☐ OFF ☐	T2: ON ☐ OFF ☐
# BACK TO BACK T1 AND T2 (When ED is on)	NO ☒ YES ☐	NO ☐ YES ☐	NO ☐ YES ☐
# STATION STOP TIMER (When ED is on)	T1: 0 Sec.	T1: Sec.	T1: Sec.
	T2: 0 Sec.	T2: Sec.	T2: Sec.
NUMBER OF TRACK WIRES	T1: 4 ☒ 6 ☐	T1: 4 ☐ 6 ☐	T1: 4 ☐ 6 ☐
	T2: 4 ☐ 6 ☐	T2: 4 ☐ 6 ☐	T2: 4 ☐ 6 ☐
# LOW EX ADJUSTMENT	T1: 0	T1:	T1:
	T2: 0	T2:	T2:

CALIBRATION HISTORY

		CALIBRATION HISTORY		LINEARIZATION HISTORY				
		EZ/EX VALUES (TRACK UNOCCUPIED)		HARDWIRE SHUNT AT TERMINATION SHUNT		HARDWIRE SHUNT AT 50 PERCENT POINT OF TRACK		
		EZ	EX	EZ VALUE	EZ/2 VALUE	NO LINEARIZATION EZ VALUE	LINEARIZATION COMPLETE STEP±	LINEARIZATION COMPLETE EZ
EAST	TRACK 1							
WEST	TRACK 1							
EAST	TRACK 2							
WEST	TRACK 2							

GCP3000ND2

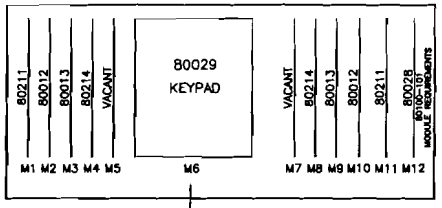

80153 PRINTED CIRCUIT BOARD LOCATED IN SLOT M6 BEHIND 80029 CONTROL INTERFACE ASSEMBLY

* Applicable to 3008 and 3008D2 8-DAX GCP's only.
** Dual frequency operation available only in Dual-Frequency 3000 GCP's equipped with 80214 processors
# Applicable only to 3000 GCP's equipped with 80044 processors.
‡ Applicable only to 3000 GCP's equipped with 80214 processors with A01C revision and later.
† Applicable only to 3000 GCP's equipped with 80214 processors with A01E revision and later.
● Applicable only when a SEAR node had been programmed into the GCP from a SEAR.

§ ISLAND CIRCUIT NOTES:
1. Frequencies of 10 kHz and lower should be used an island length of 200 feet or longer, or if lumped ballast at the crossing is anticipated.
2. Island frequencies should not be repeated in the same track section within 3000 feet, unless separated by insulated joints.
3. At multiple track installations, use different frequencies for each island circuit.
4. On adjacent tracks, island frequencies should not be repeated within 1500 feet.

ORIGINAL DATE	05/27/05
DRAFTSMAN	RCL
DESIGNER	RCL
CHECKER	RCL
REVISION A	11-12-07 SIGNAL SHOP REV.

RCL Railroad Controls Limited

ILLINOIS RAILWAY

LOCATION: IL 23 (COLUMBUS ST.) OTTAWA, IL ILLINOIS RAILWAY

TITLE: CONSTANT WARNING SET UP SHEET

SUB: OTTAWA	RRMP: 80.02	DOT NO.: 065 101S
RCL NO.: A2759	SCALE: N.T.S.	SHEET 9 OF 12

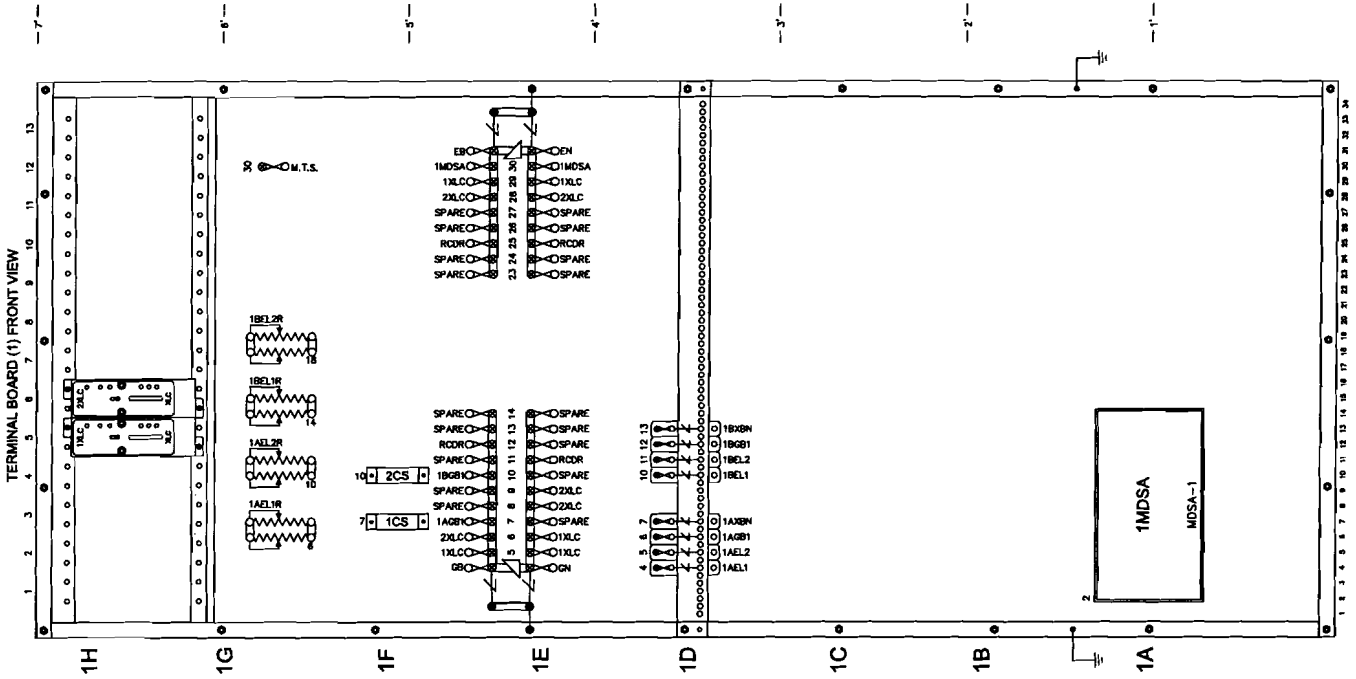

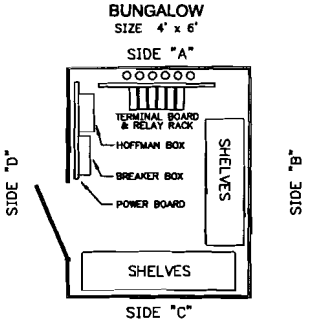

LEGEND:

O = INSULATED CAP

ORIGINAL DATE 05/27/05	RCL Railroad Controls Limited	ILLINOIS RAILWAY	
DRAFTSMAN RCL	LOCATION IL 23 (COLUMBUS ST.) OTTAWA, IL ILLINOIS RAILWAY		
DESIGNER RCL			
CHECKER RCL			
	TITLE 4X6 CABIN LAYOUT		
REVISION A	11-12-07 SIGNAL SHOP REV.	SUB OTTAWA	RMP 80.02	DOT NO. 065 101S
	RCL NO. A2759	SCALE N.T.S.	SHEET 10 OF 12

CC

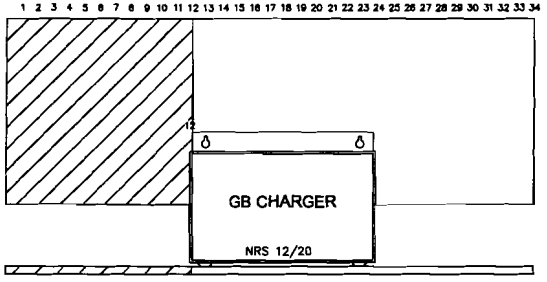

CB

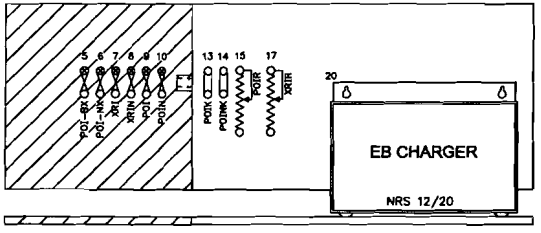

CA

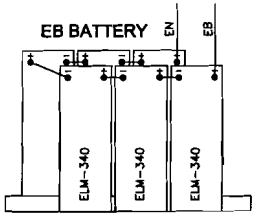

= AREA SHARED WITH ANOTHER SHELF (MAY BE USED IF NECESSARY)

ORIGINAL DATE 05/27/05	RCL Railroad Controls Limited	ILLINOIS RAILWAY	
DRAFTSMAN RCL	LOCATION IL 23 (COLUMBUS ST.) OTTAWA, IL ILLINOIS RAILWAY		
DESIGNER RCL			
CHECKER RCL			
	TITLE 4X6 CABIN LAYOUT		
REVISION A 11-12-07 SIGNAL SHOP REV.	SUB OTTAWA	MPMP 80.02	DOT NO. 065 101S
	RCL NO. A2759	SCALE N.T.S.	SHEET 11 OF 12

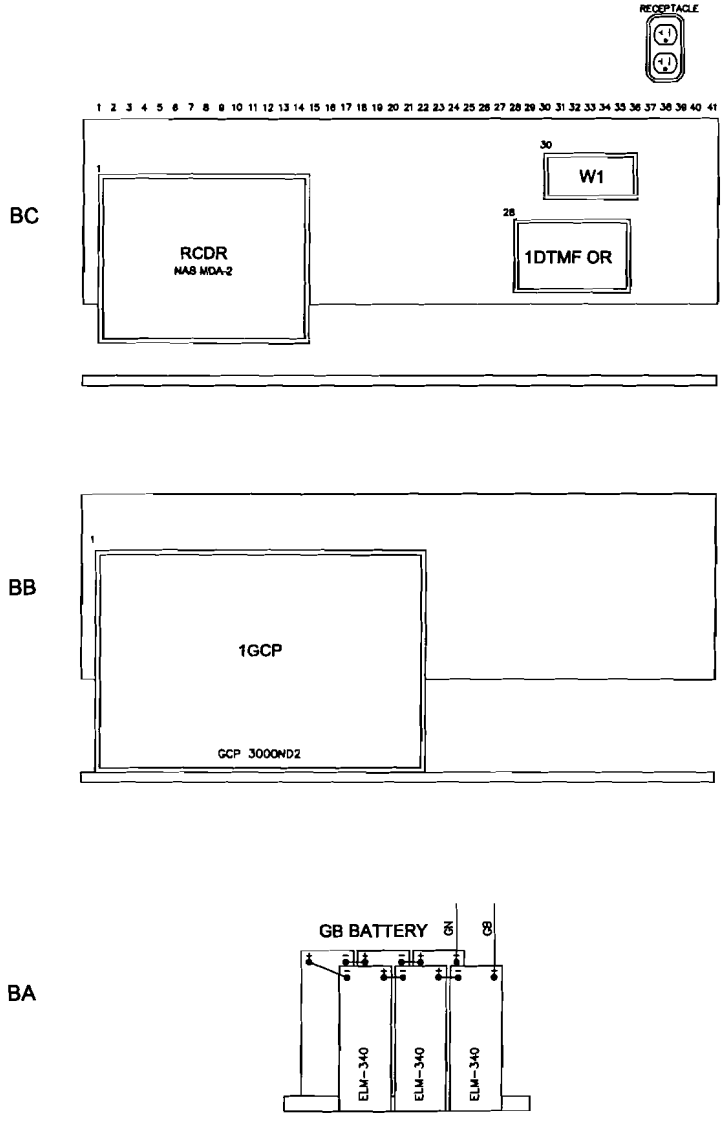

ORIGINAL DATE 05/27/05	RCL Railroad Controls Limited	ILLINOIS RAILWAY	
DRAFTSMAN RCL	LOCATION IL 23 (COLUMBUS ST.) OTTAWA, IL ILLINOIS RAILWAY		
DESIGNER RCL			
CHECKER RCL			
	TITLE 4X6 CABIN LAYOUT		
REVISION A	11-12-07 SIGNAL SHOP REV.	SUB OTTAWA	RRMP 80.02	DOT NO. 065 101S
		RCL NO. A2759	SCALE N.T.S.	SHEET 12 OF 12