RECEIVED
DEC 7 2007
Illinois Commerce Commission
Rail Safety Division

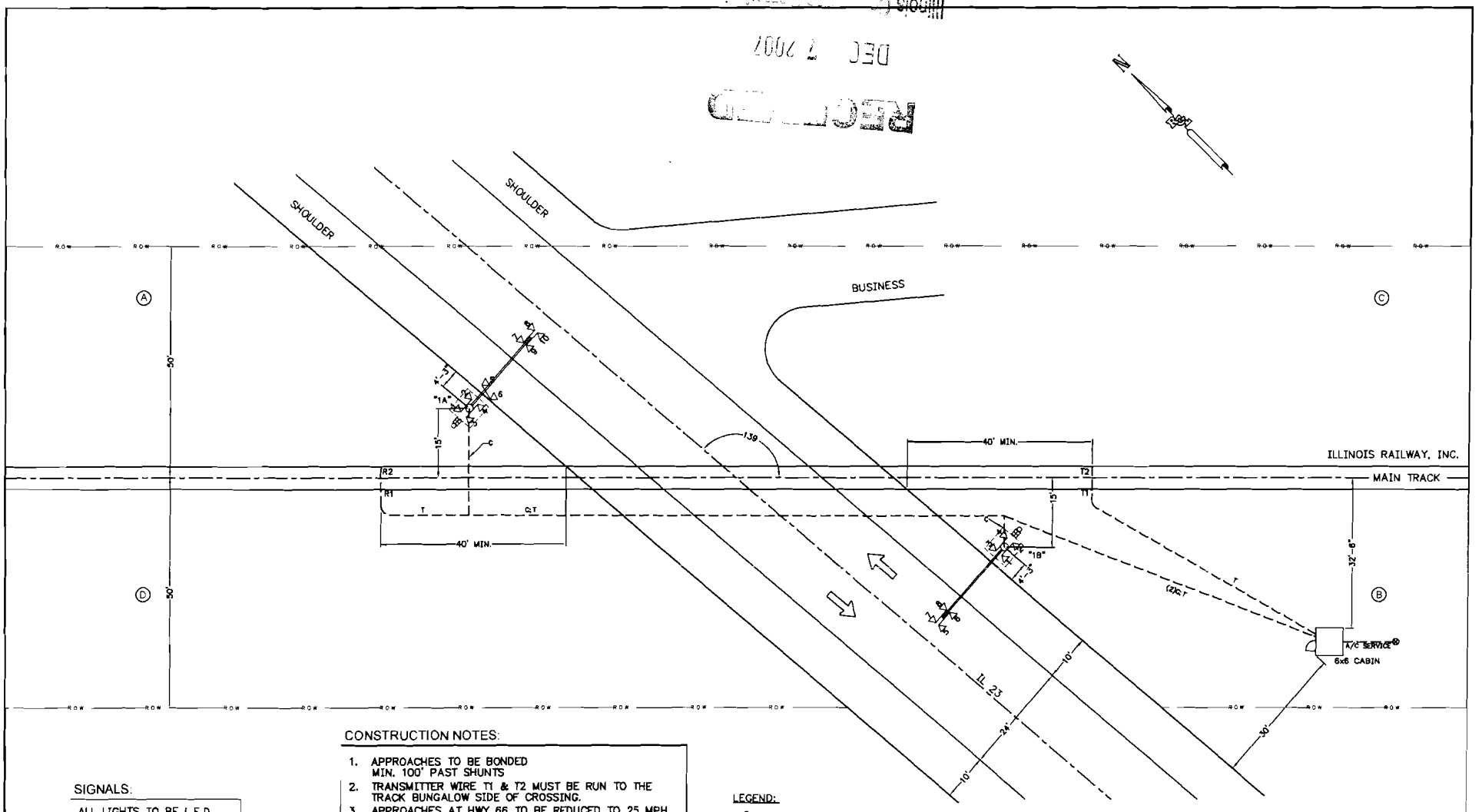

SIGNALS:

ALL LIGHTS TO BE L.E.D.
CANTILEVER "1A"
CANTILEVER "1B"

CABLE RUNS:

C = 5C#6
T = 2C#6

CONSTRUCTION NOTES:

1. APPROACHES TO BE BONDED MIN. 100' PAST SHUNTS
2. TRANSMITTER WIRE T1 & T2 MUST BE RUN TO THE TRACK BUNGALOW SIDE OF CROSSING.
3. APPROACHES AT HWY 66 TO BE REDUCED TO 25 MPH. CONTACT RCL ENGINEERING.

SCOPE OF WORK:

INSTALL FLASHING LIGHTS, 6X6 BUNGALOW WITH CONSTANT WARNING CIRCUITRY. INSTALLATION TO INCLUDE NEW CABLE, BATTERIES, POWER TAP, AND NARROW BAND SHUNTS.
REMOVE EXISTING WARNING SYSTEM.

LEGEND:

= BELL
= SIGNAL FOUNDATION

ORIGINAL DATE 09/25/03	RCL Railroad Controls Limited	ILLINOIS RAILWAY	
DRAFTSMAN RCL	LOCATION IL 23 OTTAWA, IL ILLINOIS RAILWAY, INC.		
DESIGNER RCL			
CHECKER RCL	TITLE SITE LAYOUT		
REVISION A 11-13-07 SIGNAL SHOP REV	SUB OTTAWA	RRMP 85.10	DOT NO. 065 128B
	RCL NO. A2719	SCALE 1"=20'	SHEET 1 OF 12

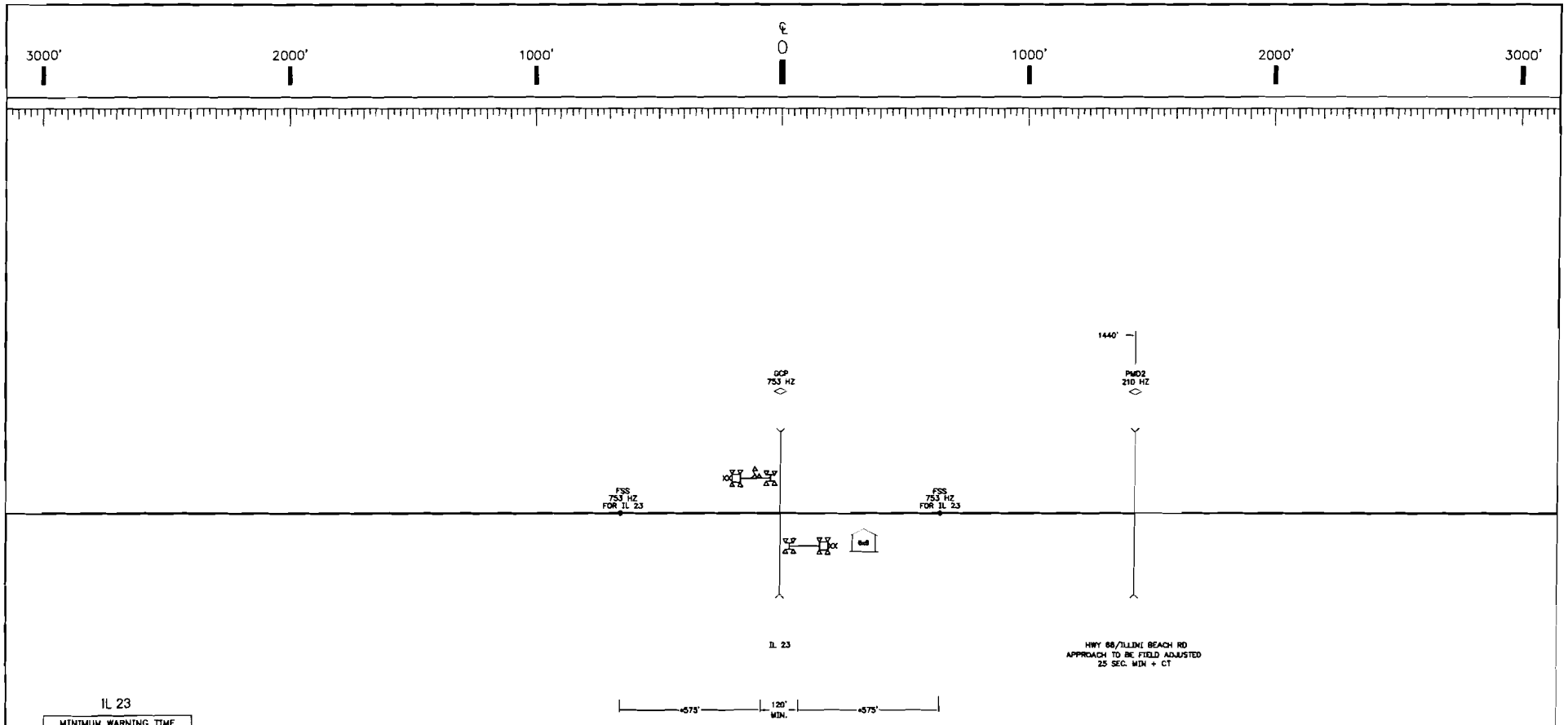

IL 23

MINIMUM WARNING TIME	
MINIMUM	20 SEC.
CLEARANCE	4 SEC.
MWT	24 SEC.

TOTAL WARNING TIME	
MIN. WARNING	24 SEC.
BUFFER	5 SEC.
TWT	29 SEC.

TOTAL APPROACH TIME	
TOTAL WARNING	29 SEC.
EQUIP. RESPONSE	10 SEC.
ADV. PREMPTION	N/A
TAT	39 SEC.

* BASED ON TRAIN SPEED OF 10 M.P.H.

NOTES:
1. REFER TO CONSTANT WARNING SET UP SHEET FOR PROPER WARNING TIME CALCULATION.
2. APPROACH DISTANCES ARE TO BE MEASURED FROM THE CIRCUIT FEED POINTS.

ORIGINAL DATE	09/25/03
DRAFTSMAN	RCL
DESIGNER	RCL
CHECKER	RCL
REVISION A	11-13-07 SIGNAL SHOP REV

RCL Railroad Controls Limited

ILLINOIS RAILWAY

LOCATION
IL 23
OTTAWA, IL
ILLINOIS RAILWAY, INC.

TITLE LINE PLAN

SUB	MRMP	DOT NO.
OTTAWA	85.10	065 128B
RCL NO. A2719	SCALE 1"=400'	SHEET 2 OF 12

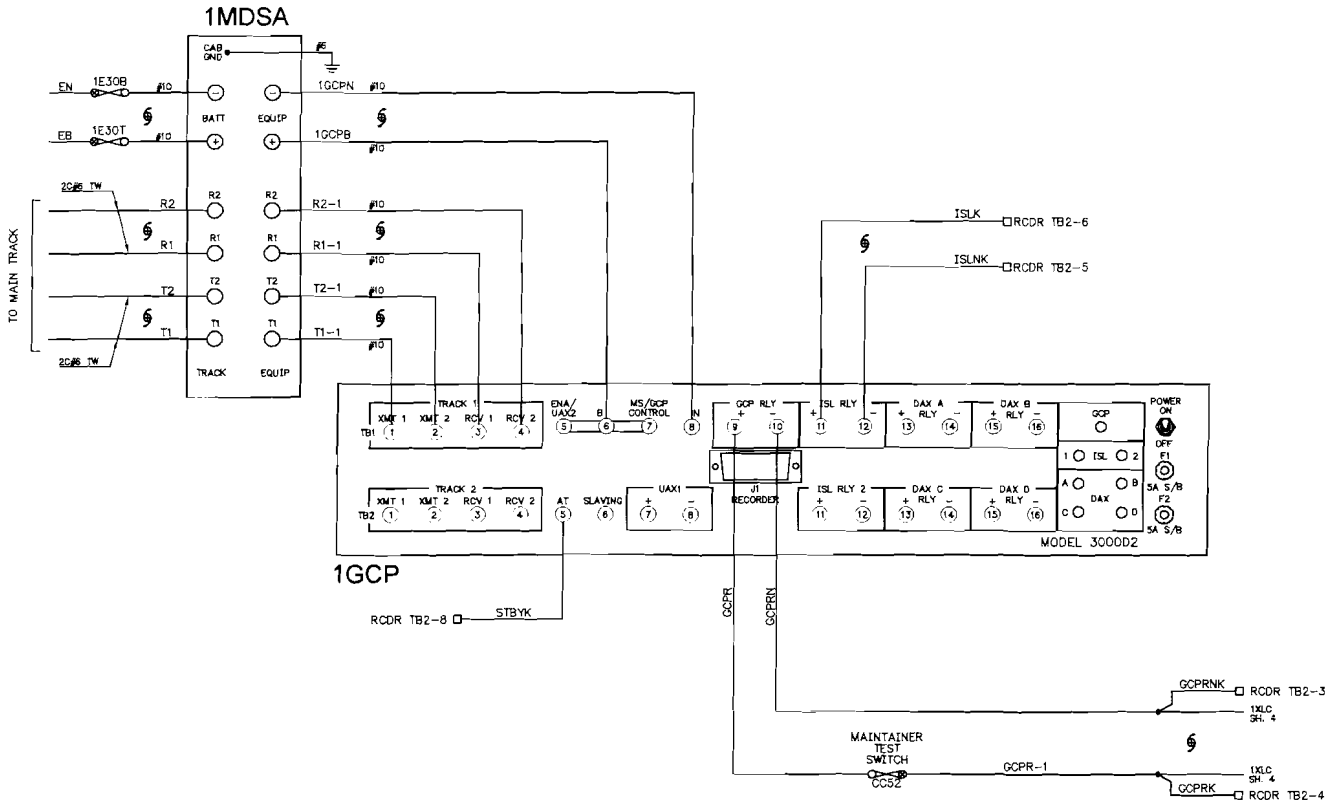

LEGEND

- ∠ = EQUALIZER
- ∠ = LIGHTING ARRESTER
- § = TWISTED WIRE
- o = INSULATED CAP
- ⊗ = GOLD NUT
- ⏚ = GROUND

NOTE:
1. ALL BUNGALOW WIRING TO BE #16 UNLESS OTHERWISE NOTED.

ORIGINAL DATE 09/25/03		RCL Railroad Controls Limited	ILLINOIS RAIL AY
DRAFTSMAN	RCL	LOCATION IL 23 OTTAWA, IL ILLINOIS RAILWAY, INC.	
DESIGNER	RCL		
CHECKER	RCL		
CHANGE FROM TYPICAL: Y		TITLE CROSSING CONTROL CIRCUITS	
REVISION A	11-13-07 SIGNAL SHOP REV	SUB OTTAWA	RRMP 85.10	DOT NO. 065 128B
		RCL NO. A2719	SCALE N.T.S.	SHEET 3 OF 12

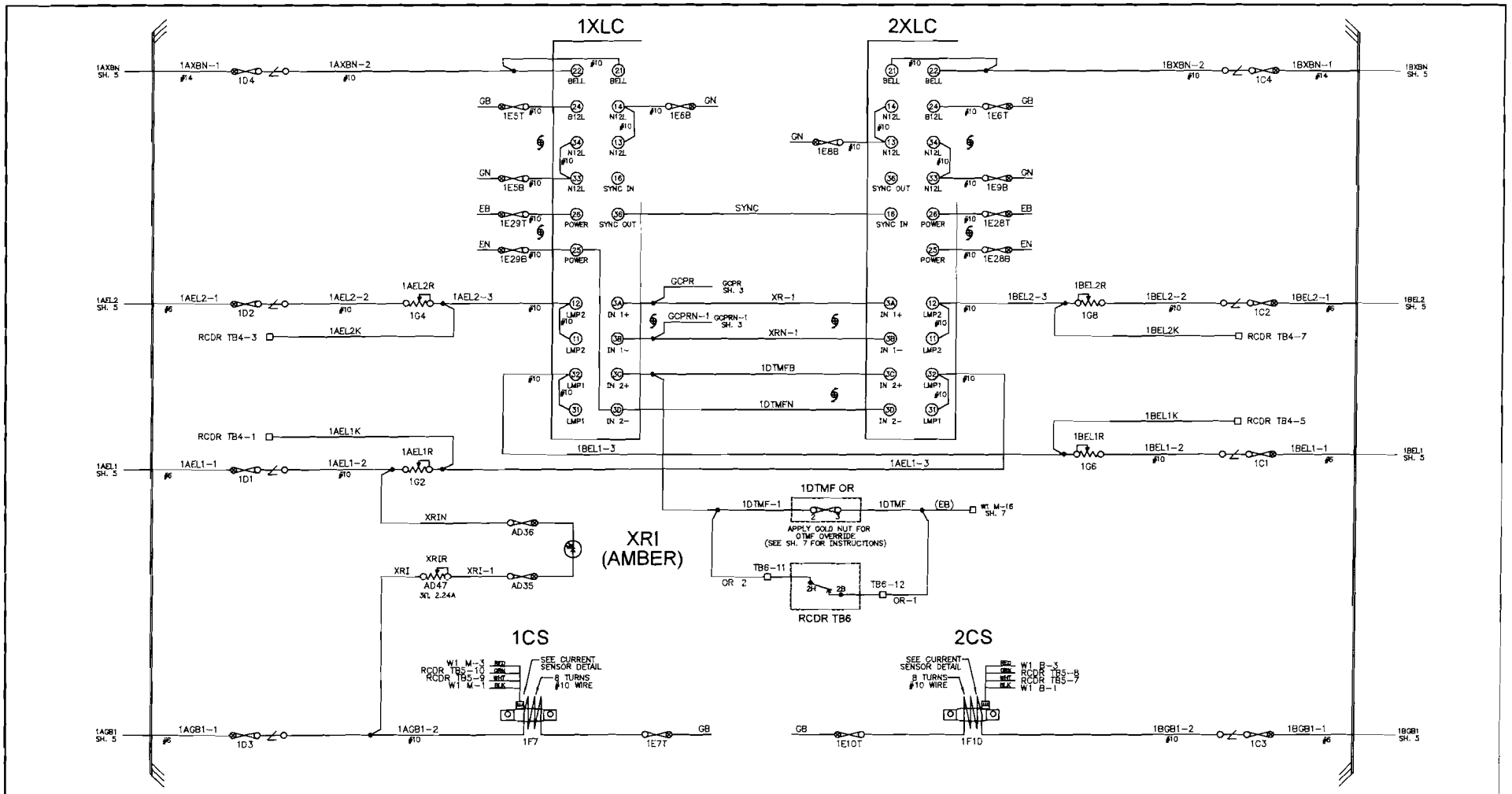

NOTES:

1. ALL LAMP RESISTORS ARE 1Ω,3.87A UNLESS OTHERWISE NOTED
2. ALL BUNGALOW WIRING TO BE #16 UNLESS OTHERWISE NOTED.

CURRENT SENSOR CONNECTOR

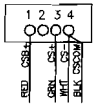

4 COND CABLE TO SENSOR
PART NO NAS CS100 CABLE

ORIGINAL DATE 09/25/03	RCL Railroad Controls Limited	ILLINOIS RAILWAY
DRAFTSMAN RCL	LOCATION IL 23 OTTAWA, IL ILLINOIS RAILWAY, INC.	
DESIGNER RCL		
CHECKER RCL		
CHANGE FROM TYPICAL: Y	TITLE CROSSING CONTROL CIRCUITS	
REVISION A 11-13-07 SIGNAL SHOP REV	SUB OTTAWA / RSMP 85.10 / DOT NO. 065 128B	
	RCL NO. A2719 / SCALE N.T.S.	SHEET 4 OF 12

SIGNAL 1A

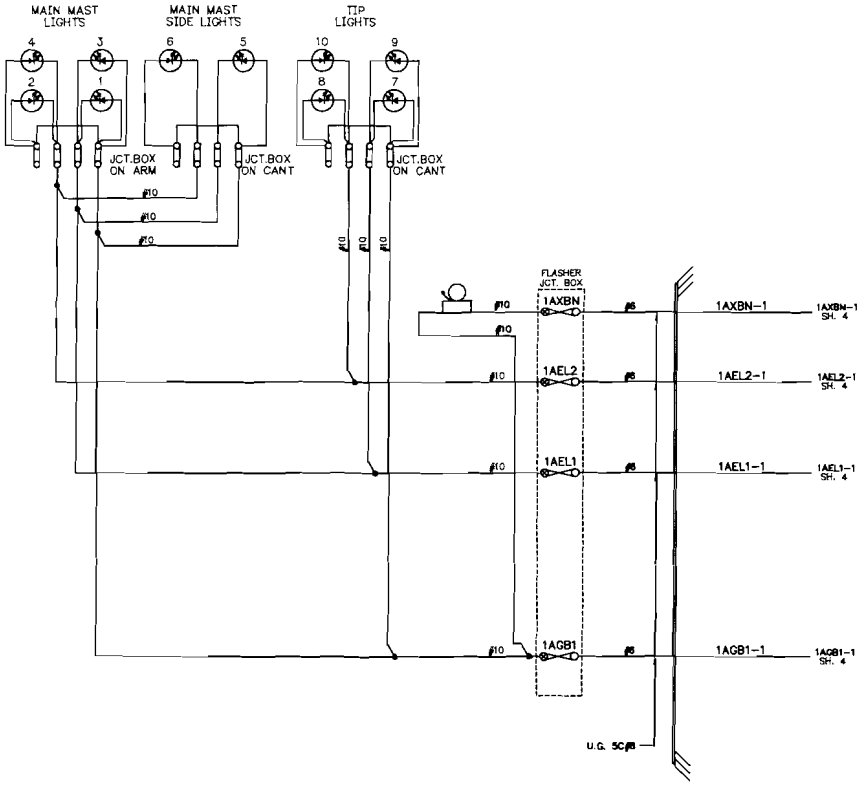

SIGNAL 1B

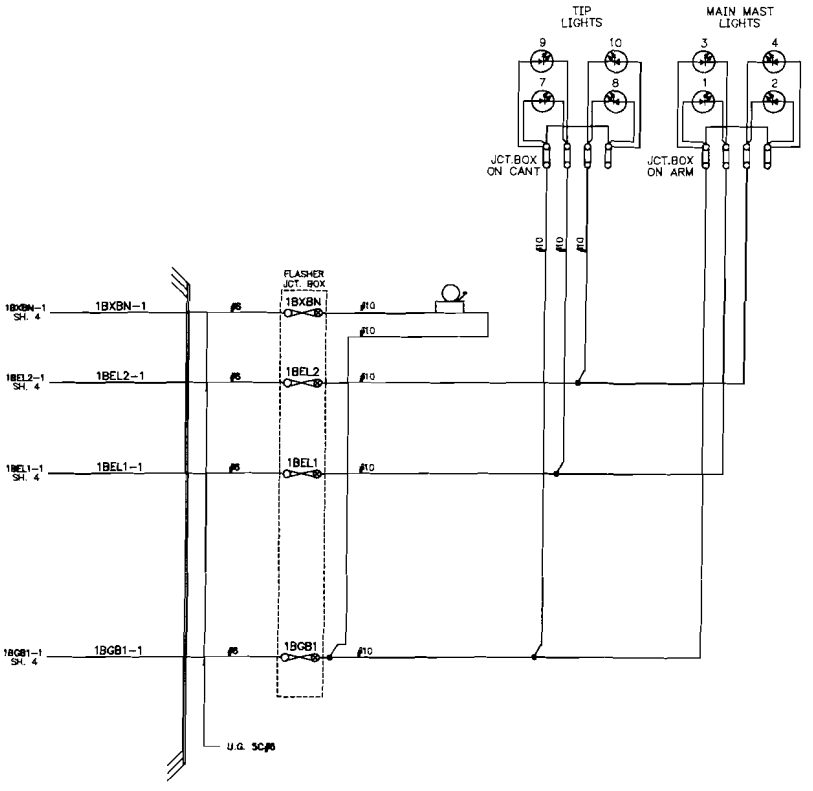

ORIGINAL DATE 09/25/03	RCL Railroad Controls Limited	ILLINOIS RAILWAY	
DRAFTSMAN RCL	LOCATION IL 23 OTTAWA, IL ILLINOIS RAILWAY, INC.		
DESIGNER RCL			
CHECKER RCL			
CHANGE FROM TYPICAL: Y	TITLE FLASHER CIRCUITS		
REVISION A 11-13-07 SIGNAL SHOP REV	SUB OTTAWA	RRMP B5.10	DOT NO. 065 128B
	RCL NO. A2719	SCALE N.T.S.	SHEET 5 OF 12

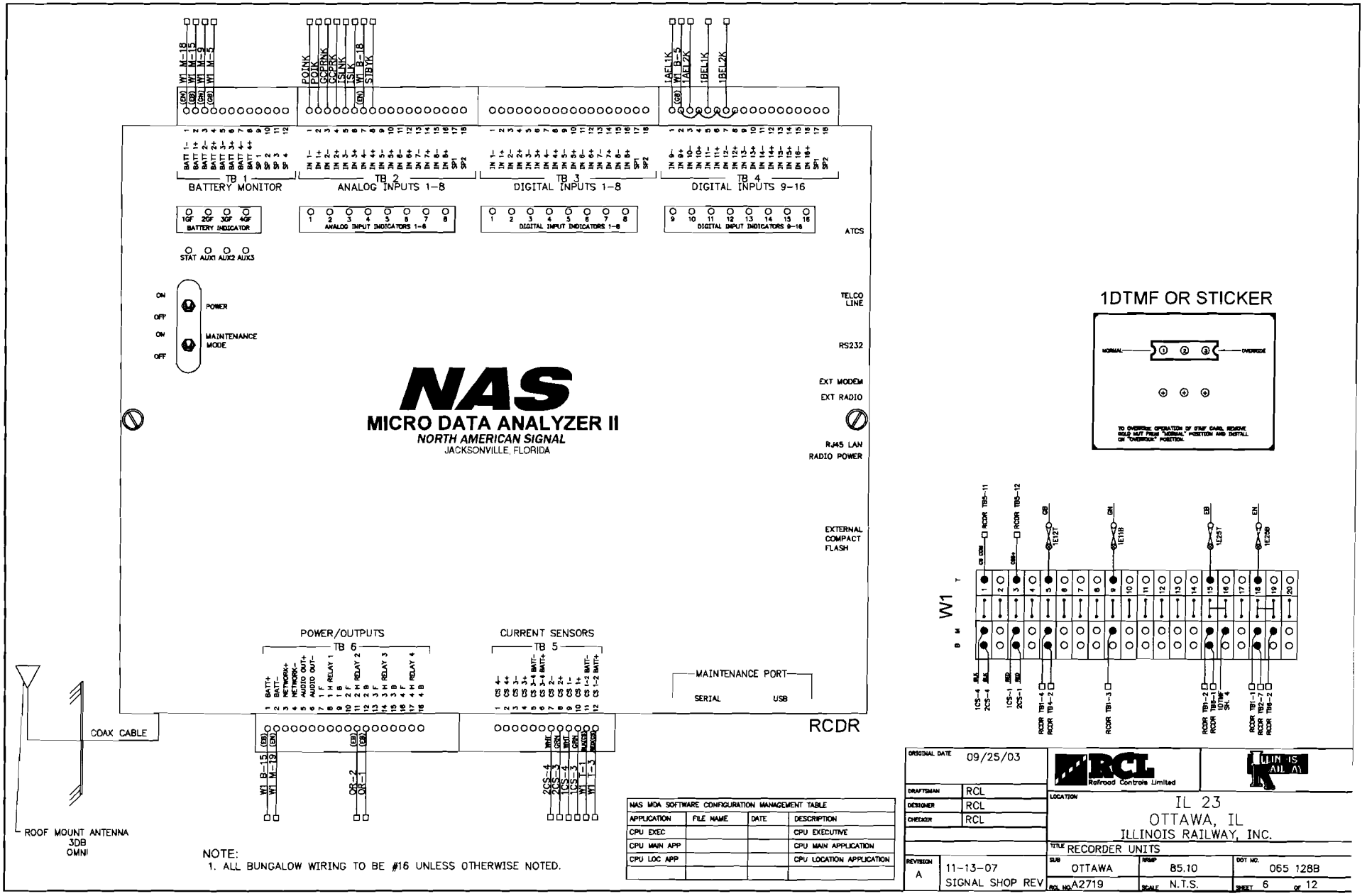

NOTE:
1. ALL BUNGALOW WIRING TO BE #16 UNLESS OTHERWISE NOTED.

NAS MDA SOFTWARE CONFIGURATION MANAGEMENT TABLE			
APPLICATION	FILE NAME	DATE	DESCRIPTION
CPU EXEC			CPU EXECUTIVE
CPU MAIN APP			CPU MAIN APPLICATION
CPU LOC APP			CPU LOCATION APPLICATION

ORIGINAL DATE	09/25/03	
DRAFTSMAN	RCL	
DESIGNER	RCL	
CHECKER	RCL	
REVISION A	11-13-07 SIGNAL SHOP REV	

RCL Railroad Controls Limited

LIN IS ALL A\

LOCATION: IL 23 OTTAWA, IL ILLINOIS RAILWAY, INC.

TITLE: RECORDER UNITS

SUB	RRMP	DOT NO.
OTTAWA	85.10	065 128B
RCL NO. A2719	SCALE N.T.S.	SHEET 6 OF 12

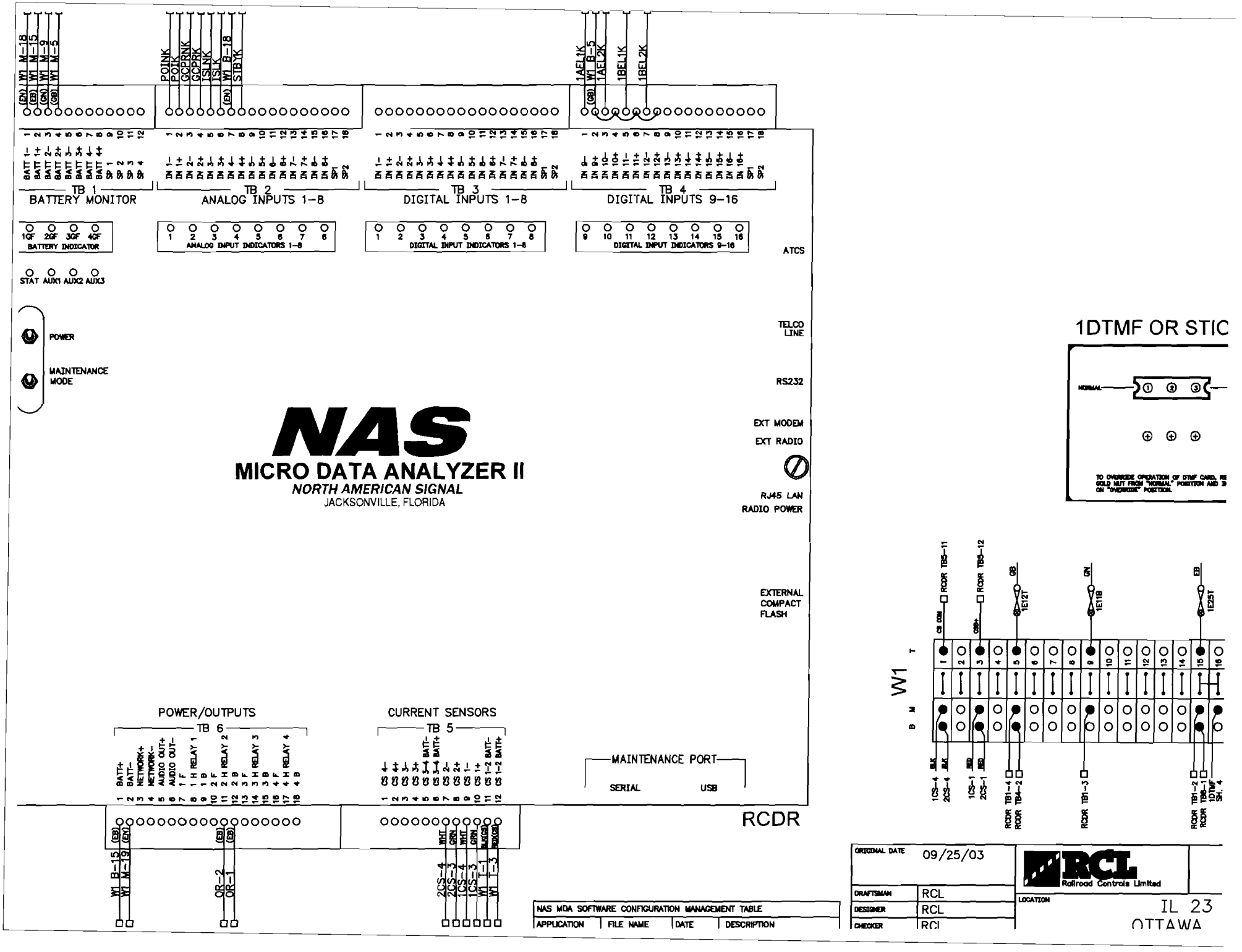
TB 1
BATTERY MONITOR
TB 2
ANALOG INPUTS 1–8
TB 3
DIGITAL INPUTS 1–8
TB 4
DIGITAL INPUTS 9–16
BATTERY INDICATOR
ANALOG INPUT INDICATORS 1–8
DIGITAL INPUT INDICATORS 1–8
DIGITAL INPUT INDICATORS 9–16
STAT AUX1 AUX2 AUX3
POWER
MAINTENANCE MODE
ATCS
TELCO LINE
RS232
EXT MODEM
EXT RADIO
RJ45 LAN
RADIO POWER
EXTERNAL COMPACT FLASH
NAS
MICRO DATA ANALYZER II
NORTH AMERICAN SIGNAL
JACKSONVILLE, FLORIDA
POWER/OUTPUTS
TB 6
CURRENT SENSORS
TB 5
MAINTENANCE PORT
SERIAL
USB
RCDR
1DTMF OR STIC
NORMAL
TO OVERRIDE OPERATION OF DTMF CARD, RE
HOLD NUT FROM "NORMAL" POSITION AND T
ON "OVERRIDE" POSITION.
W1
ORIGINAL DATE 09/25/03
DRAFTSMAN RCL
DESIGNER RCL
CHECKER RCL
RCL Railroad Controls Limited
LOCATION
IL 23
OTTAWA
NAS MDA SOFTWARE CONFIGURATION MANAGEMENT TABLE
APPLICATION
FILE NAME
DATE
DESCRIPTION

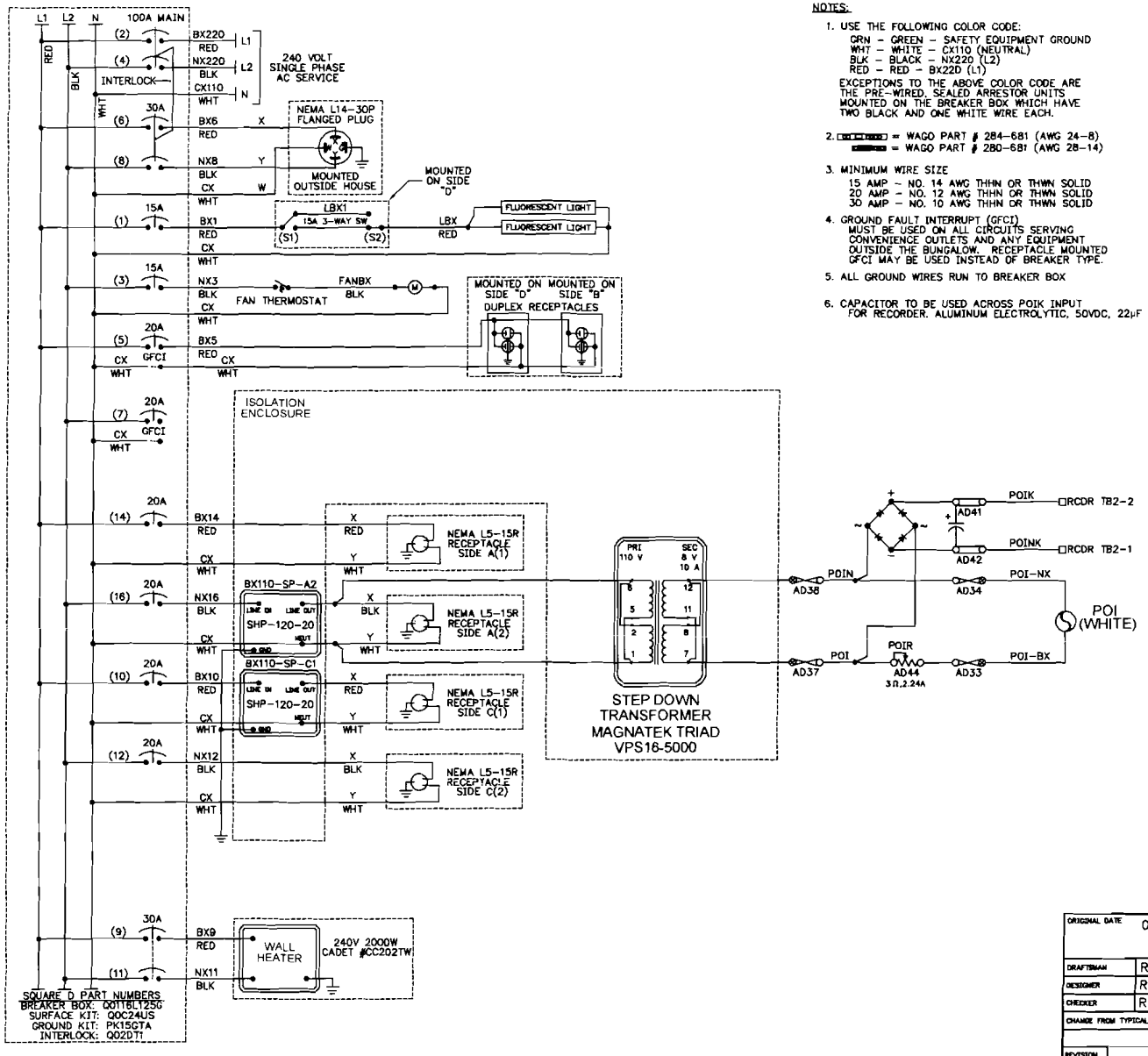

NOTES:

1. USE THE FOLLOWING COLOR CODE:
   GRN - GREEN - SAFETY EQUIPMENT GROUND
   WHT - WHITE - CX110 (NEUTRAL)
   BLK - BLACK - NX220 (L2)
   RED - RED - BX22D (L1)
   EXCEPTIONS TO THE ABOVE COLOR CODE ARE THE PRE-WIRED, SEALED ARRESTOR UNITS MOUNTED ON THE BREAKER BOX WHICH HAVE TWO BLACK AND ONE WHITE WIRE EACH.
2. = WAGO PART # 284-681 (AWG 24-8)
   = WAGO PART # 280-681 (AWG 28-14)
3. MINIMUM WIRE SIZE
   15 AMP - NO. 14 AWG THHN OR THWN SOLID
   20 AMP - NO. 12 AWG THHN OR THWN SOLID
   30 AMP - NO. 10 AWG THHN OR THWN SOLID
4. GROUND FAULT INTERRUPT (GFCI) MUST BE USED ON ALL CIRCUITS SERVING CONVENIENCE OUTLETS AND ANY EQUIPMENT OUTSIDE THE BUNGALOW. RECEPTACLE MOUNTED GFCI MAY BE USED INSTEAD OF BREAKER TYPE.
5. ALL GROUND WIRES RUN TO BREAKER BOX
6. CAPACITOR TO BE USED ACROSS POIK INPUT FOR RECORDER. ALUMINUM ELECTROLYTIC, 50VDC, 22µF

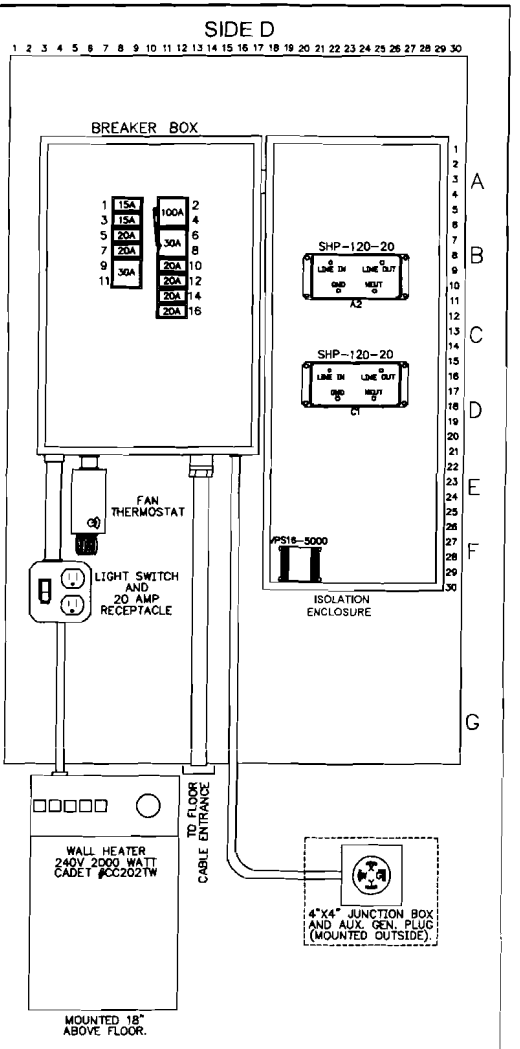

ORIGINAL DATE 09/25/03	RCL Railroad Controls Limited		
DRAFTSMAN RCL	LOCATION IL 23 OTTAWA, IL ILLINOIS RAILWAY, INC.		
DESIGNER RCL			
CHECKER RCL			
CHANGE FROM TYPICAL: Y	TITLE POWER CIRCUITS		
REVISION A 11-13-07 SIGNAL SHOP REV	SUB OTTAWA	RRMP 85.10	DOT NO. 065 128B
	RCL NO. A2719	SCALE N.T.S.	SHEET 7 OF 12

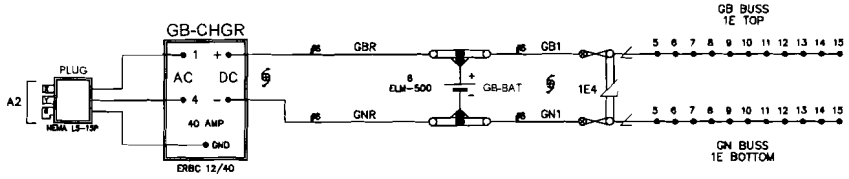

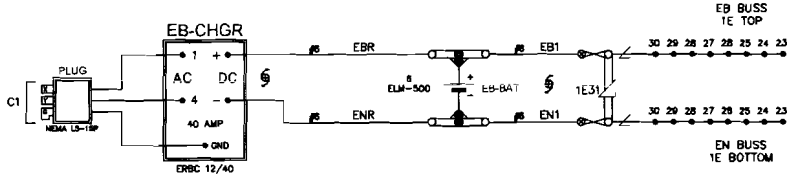

ERBC "GB" PROGRAMMING FUNCTIONS			
NO.	ABBREVATION	DEFAULT SETTING	DESIRED SETTING
1	DATE CODE	–	INSTALLATION DATE
2	DAYS FROM LAST POWER FAULT	–	–
3	POWER FAULT COUNTER	–	–
4	MIN. INT. CHARGER TEMP.	–	–
5	MAX. INT. CHARGER TEMP.	–	–
6	MIN. BATTERY TEMP.	–	–
7	MAX. BATTERY TEMP.	–	–
8	CELLS IN THE BATTERY	6	6
9	FLOAT VOLTAGE PER CELL	2.23	2.21
10	TEMPERATURE COMPENSTATION	-3.0	-3.0
11	MAXIMUM CURRENT	40.0	40.0
12	ERROR CODES	0	–
13	EXT. TEMPERATURE PROBE	1	1
14	DISPLAY TIME OUT	1	1
15	TEMPERATURE SCALE	0	0
16	RESET STATISTICAL DATA	–	–
17	CLEAR ALL ERRORS	–	–
18	STOP SWITCH DISABLE	0	1
19	PRINT INTERVAL	0	0
20	LOG INTERVAL	0	0
21	DATA LOG DUMP	–	–
22	BAUD RATE	0	0
23	SAMPLE HOLD	0	0
24	SET PASSWORD	0	0

ERBC "EB" PROGRAMMING FUNCTIONS			
NO.	ABBREVATION	DEFAULT SETTING	DESIRED SETTING
1	DATE CODE	–	INSTALLATION DATE
2	DAYS FROM LAST POWER FAULT	–	–
3	POWER FAULT COUNTER	–	–
4	MIN. INT. CHARGER TEMP.	–	–
5	MAX. INT. CHARGER TEMP.	–	–
6	MIN. BATTERY TEMP.	–	–
7	MAX. BATTERY TEMP.	–	–
8	CELLS IN THE BATTERY	6	6
9	FLOAT VOLTAGE PER CELL	2.23	2.21
10	TEMPERATURE COMPENSTATION	-3.0	-3.0
11	MAXIMUM CURRENT	40.0	40.0
12	ERROR CODES	0	–
13	EXT. TEMPERATURE PROBE	1	1
14	DISPLAY TIME OUT	1	1
15	TEMPERATURE SCALE	0	0
16	RESET STATISTICAL DATA	–	–
17	CLEAR ALL ERRORS	–	–
18	STOP SWITCH DISABLE	0	1
19	PRINT INTERVAL	0	0
20	LOG INTERVAL	0	0
21	DATA LOG DUMP	–	–
22	BAUD RATE	0	0
23	SAMPLE HOLD	0	0
24	SET PASSWORD	0	0

NOTE:

1. BATTERY CHARGER TAP SETTING TO BE SET FOR 115 VAC.

ORIGINAL DATE 09/25/03	RCL Railroad Controls Limited	ILLINOIS RAILWAY	
DRAFTSMAN RCL	LOCATION IL 23 OTTAWA, IL ILLINOIS RAILWAY, INC.		
DESIGNER RCL			
CHECKER RCL			
CHANGE FROM TYPICAL: N	TITLE POWER CIRCUITS		
REVISION A 11-13-07 SIGNAL SHOP REV	SUB OTTAWA	RRMP 85.10	DOT NO. 065 128B
	RCL NO. A2719	SCALE N.T.S.	SHEET 8 OF 12

3000 GCP APPLICATION HISTORY CARD
(Units Equipped With Processor Module 80014, 80044 or 80214)

Equipment: 3000D2
Unit/Serial No.: _____ Crossing No.: D65 128B Crossing Name: IL 23
City: OTTAWA State: IL
Weather Conditions: _____ Island Frequency: T1: §13.2 kHZ T2: _____ kHZ

PROGRAMMING HISTORY

		Initial Programmed Value Date:	Program Change Date:	Program Change Date:
NUMBER OF TRACKS (Number of transceiver Modules, 1 or 2)		1 ☒ 2 ☐	1 ☐ 2 ☐	1 ☐ 2 ☐
FREQUENCY (MS/GCP) ••	T1:	753 Hz	Hz	Hz
	T2:	Hz	Hz	Hz
UNIDIRECTIONAL/BIDIRECTIONAL	T1:	UNI ☐ BI ☒	UNI ☐ BI ☐	UNI ☐ BI ☐
	T2:	UNI ☐ BI ☐	UNI ☐ BI ☐	UNI ☐ BI ☐
XMIT LEVEL	T1:	MAX ☐ MED ☒	MAX ☐ MED ☐	MAX ☐ MED ☐
	T2:	MAX ☐ MED ☐	MAX ☐ MED ☐	MAX ☐ MED ☐
PREDICTOR/MOTION SENSOR	T1:	PRED ☒ MS ☐	PRED ☐ MS ☐	PRED ☐ MS ☐
	T2:	PRED ☐ MS ☐	PRED ☐ MS ☐	PRED ☐ MS ☐
WARNING TIME SELECTED	T1:	29 Sec.	Sec.	Sec.
	T2:	N/A Sec.	Sec.	Sec.
APPROACH DISTANCE — SELECTED	T1:	575 Ft.	Ft.	Ft.
	T2:	N/A Ft.	Ft.	Ft.
APPROACH DISTANCE — COMPUTED	T1:	Ft.	Ft.	Ft.
	T2:	N/A Ft.	Ft.	Ft.
UAX1 PICKUP DELAY (UAX)(0 = OFF)		0 Sec.	Sec.	Sec.
ENA/UAX2 DELAY (0 = ENA)		0 Sec.	Sec.	Sec.
ISLAND DISTANCE (Between transmit & receive track wire connections)	T1:	153 Ft.	Ft.	Ft.
	T2:	N/A Ft.	Ft.	Ft.
NUMBER OF DAX'S (For 3000ND and 3000ND2 units, set this item to 0)		D☒ 1☐ 2☐ 3☐ 4☐ 5☐ 6☐ 7☐ 8☐	D☐ 1☐ 2☐ 3☐ 4☐ 5☐ 6☐ 7☐ 8☐	D☐ 1☐ 2☐ 3☐ 4☐ 5☐ 6☐ 7☐ 8☐
DAX A TRACK ASSIGNMENT		T1: ☐ T2: ☐	T1: ☐ T2: ☐	T1: ☐ T2: ☐
DAX A DISTANCE (0 = Preempt)		Ft.	Ft.	Ft.
DAX A WARNING TIME		Sec.	Sec.	Sec.
DAX B TRACK ASSIGNMENT		T1: ☐ T2: ☐	T1: ☐ T2: ☐	T1: ☐ T2: ☐
DAX B DISTANCE (D = Preempt)		Ft.	Ft.	Ft.
DAX B WARNING TIME		Sec.	Sec.	Sec.
DAX C TRACK ASSIGNMENT		T1: ☐ T2: ☐	T1: ☐ T2: ☐	T1: ☐ T2: ☐
DAX C DISTANCE (D = Preempt)		Ft.	Ft.	Ft.
DAX C WARNING TIME		Sec.	Sec.	Sec.
DAX D TRACK ASSIGNMENT		T1: ☐ T2: ☐	T1: ☐ T2: ☐	T1: ☐ T2: ☐
DAX D DISTANCE (0 = Preempt)		Ft.	Ft.	Ft.
DAX D WARNING TIME		Sec.	Sec.	Sec.
• DAX E TRACK ASSIGNMENT		T1: ☐ T2: ☐	T1: ☐ T2: ☐	T1: ☐ T2: ☐
• DAX E DISTANCE (D = Preempt)		Ft.	Ft.	Ft.
• DAX E WARNING TIME		Sec.	Sec.	Sec.
• DAX F TRACK ASSIGNMENT		T1: ☐ T2: ☐	T1: ☐ T2: ☐	T1: ☐ T2: ☐
• DAX F DISTANCE (0 = Preempt)		Ft.	Ft.	Ft.
• DAX F WARNING TIME		Sec.	Sec.	Sec.
• DAX G TRACK ASSIGNMENT		T1: ☐ T2: ☐	T1: ☐ T2: ☐	T1: ☐ T2: ☐
• DAX G DISTANCE (0 = Preempt)		Ft.	Ft.	Ft.
• DAX G WARNING TIME		Sec.	Sec.	Sec.
• DAX H TRACK ASSIGNMENT		T1: ☐ T2: ☐	T1: ☐ T2: ☐	T1: ☐ T2: ☐
• DAX H DISTANCE (0 = Preempt)		Ft.	Ft.	Ft.
• DAX H WARNING TIME		Sec.	Sec.	Sec.

PROGRAMMING HISTORY

	Initial Programmed Value Date:	Program Change Date:	Program Change Date:
SLAVING MASTER/SLAVE	MASTER ☒ SLAVE ☐	MASTER ☐ SLAVE ☐	MASTER ☐ SLAVE ☐
PASSWORD ENABLED	DISABLED ☒	DISABLED ☐	DISABLED ☐
	ENABLED ☐	ENABLED ☐	ENABLED ☐
RECORDER INSTALLED	NOT INSTALLED ☒	NOT INSTALLED ☐	NOT INSTALLED ☐
	INSTALLED ☐	INSTALLED ☐	INSTALLED ☐
	EXTERNAL NODE#	EXTERNAL NODE#	EXTERNAL NODE#
RS-232-C BAUD RATE	9600 bps	bps	bps
RS-232-C DATA BITS	7 ☐ 8 ☒	7 ☐ 8 ☐	7 ☐ 8 ☐
RS-232-C STOP BITS	1 ☒ 2 ☐	1 ☐ 2 ☐	1 ☐ 2 ☐
RS-232-C PARITY	NONE ☒ MARK ☐	NONE ☐ MARK ☐	NONE ☐ MARK ☐
	ODD ☐ SPACE ☐	ODD ☐ SPACE ☐	ODD ☐ SPACE ☐
	EVEN ☐	EVEN ☐	EVEN ☐
DATE (e.g., MON 13 MAY 1991)			
TIME (e.g., 06:25:43 PM)			
DAYLIGHT SAVINGS	ON ☒ OFF ☐	ON ☐ OFF ☐	ON ☐ OFF ☐

EXPANDED PROGRAMMING HISTORY
(Function Mode)

		Initial Programmed Value Date:	Program Change Date:	Program Change Date:
SWITCH TO MS (Enter EZ value)	T1:	10 EZ	EZ	EZ
	T2:	0 EZ	EZ	EZ
TRANSFER DELY MS TO GCP(0 =OFF)	T1:	0 Sec.	Sec.	Sec.
	T2:	0 Sec.	Sec.	Sec.
PRIME PREDICTION OFFSET (0 =OFF)	T1:	0 Ft.	Ft.	Ft.
	T2:	0 Ft.	Ft.	Ft.
PICKUP DELAY PRIME		15 Sec.	Sec.	Sec.
PICKUP DELAY DAX A		0 Sec.	Sec.	Sec.
PICKUP DELAY DAX B		0 Sec.	Sec.	Sec.
PICKUP DELAY DAX C		0 Sec.	Sec.	Sec.
PICKUP DELAY DAX D		0 Sec.	Sec.	Sec.
• PICKUP DELAY DAX E		0 Sec.	Sec.	Sec.
• PICKUP DELAY DAX F		0 Sec.	Sec	Sec.
• PICKUP DELAY DAX G		0 Sec.	Sec.	Sec.
• PICKUP DELAY DAX H		0 Sec.	Sec.	Sec.
COMPENSATION VALUE	T1:	1300		
	T2:	0		
# ENHANCED DETECTION (ED)	T1:	ON ☐ OFF ☒	ON ☐ OFF ☐	ON ☐ OFF ☐
	T2:	ON ☐ OFF ☐	ON ☐ OFF ☐	ON ☐ OFF ☐
# BACK TO BACK T1 AND T2 (When ED is on)		NO ☒ YES ☐	NO ☐ YES ☐	NO ☐ YES ☐
# STATION STOP TIMER (When ED is on)	T1:	0 Sec.	Sec.	Sec.
	T2:	0 Sec.	Sec.	Sec.
NUMBER OF TRACK WIRES	T1:	4 ☒ 6 ☐	4 ☐ 6 ☐	4 ☐ 6 ☐
	T2:	4 ☐ 6 ☐	4 ☐ 6 ☐	4 ☐ 6 ☐
# LOW EX ADJUSTMENT	T1:	0		
	T2:	0		

EXPANDED PROGRAMMING HISTORY
(Function Mode)

		Initial Programmed Value Date:	Program Change Date:	Program Change Date:
‡LOW EZ DETECTION	T1:	ON ☐ OFF ☒	ON ☐ OFF ☐	ON ☐ OFF ☐
	T2:	ON ☐ OFF ☐	ON ☐ OFF ☐	ON ☐ OFF ☐
‡LOW EZ DETECTION TIMER (When low EZ detection is on)	T1:	0 Min.	Min.	Min.
	T2:	0 Min.	Min.	Min.
‡POSITIVE START (0 =OFF) (Enter EZ value)	T1:	0 EZ	EZ	EZ
	T2:	0 EZ	EZ	EZ
‡POSITIVE START TIMEOUT(0=NONE) (When positive start is on)	T1:	0 Min.	Min.	Min.
	T2:	0 Min.	Min.	Min.
‡SET AT OPERATION		NORMAL ☒ DIAGNOSTIC ☐	NORMAL ☐ DIAGNOSTIC ☐	NORMAL ☐ DIAGNOSTIC ☐
❷† DIAGNOSTIC MESSAGES		ON ☐ OFF ☐	ON ☐ OFF ☐	ON ☐ OFF ☐
❷† DAX MESSAGES		ON ☐ OFF ☐	ON ☐ OFF ☐	ON ☐ OFF ☐
† ADVANCE PREEMPT TIMER		Sec.	Sec.	Sec.

CALIBRATION HISTORY

		CALIBRATION HISTORY		LINEARIZATION HISTORY				
		EZ/EX VALUES (TRACK UNOCCUPIED)		HARDWIRE SHUNT AT TERMINATION SHUNT		HARDWIRE SHUNT AT 50 PERCENT POINT OF TRACK		
		EZ	EX	EZ VALUE	EZ/2 VALUE	NO LINEARIZATION EZ VALUE	LINEARIZATION COMPLETE STEP	LINEARIZATION COMPLETE EZ
	MAIN							
NORTH	TRACK 1							
SOUTH	TRACK 1							
NORTH	TRACK 2							
SOUTH	TRACK 2							
	STAND-BY							
NORTH	TRACK 1							
SOUTH	TRACK 1							
NORTH	TRACK 2							
SOUTH	TRACK 2							

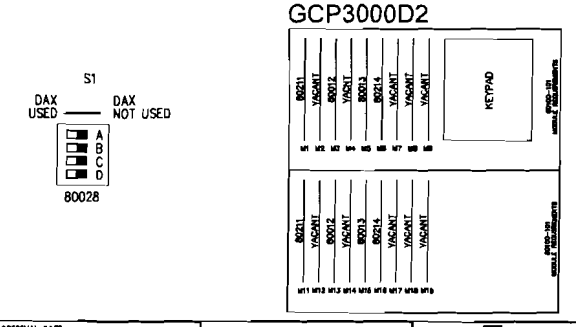

* Applicable to 3008 and 3008D2 8-DAX GCP's only.
•• Dual frequency operation available only in Dual-Frequency 3000 GCP's equipped with 80214 processors
\# Applicable only to 3000 GCP's equipped with 80044 processors.
‡ Applicable only to 3000 GCP's equipped with 80214 processors with A01C revision and later.
† Applicable only to 3000 GCP's equipped with 80214 processors with A01E revision and later.
❷ Applicable only when a SEAR node had been programmed into the GCP from a SEAR.

§ ISLAND CIRCUIT NOTES:
1. Frequencies of 10 kHz and lower should be used on island length of 200 feet or longer, or if lumped ballast at the crossing is anticipated.
2. Island frequencies should not be repeated in the same track section within 3000 feet, unless separated by insulated joints.
3. At multiple track installations, use different frequencies for each island circuit.
4. On adjacent tracks, island frequencies should not be repeated within 1500 feet.

ORIGINAL DATE	09/25/03
DRAFTSMAN	RCL
DESIGNER	RCL
CHECKER	RCL
REVISION A	11-13-07 SIGNAL SHOP REV

RCL Railroad Controls Limited

ILLINOIS RAILWAY

LOCATION: IL 23 OTTAWA, IL ILLINOIS RAILWAY, INC.

TITLE: CONSTANT WARNING SET UP SHEET

SUB	MILEPOST	DOT NO.
OTTAWA	85.10	065 128B
RCL NO. A2719	SCALE N.T.S.	SHEET 9 OF 12

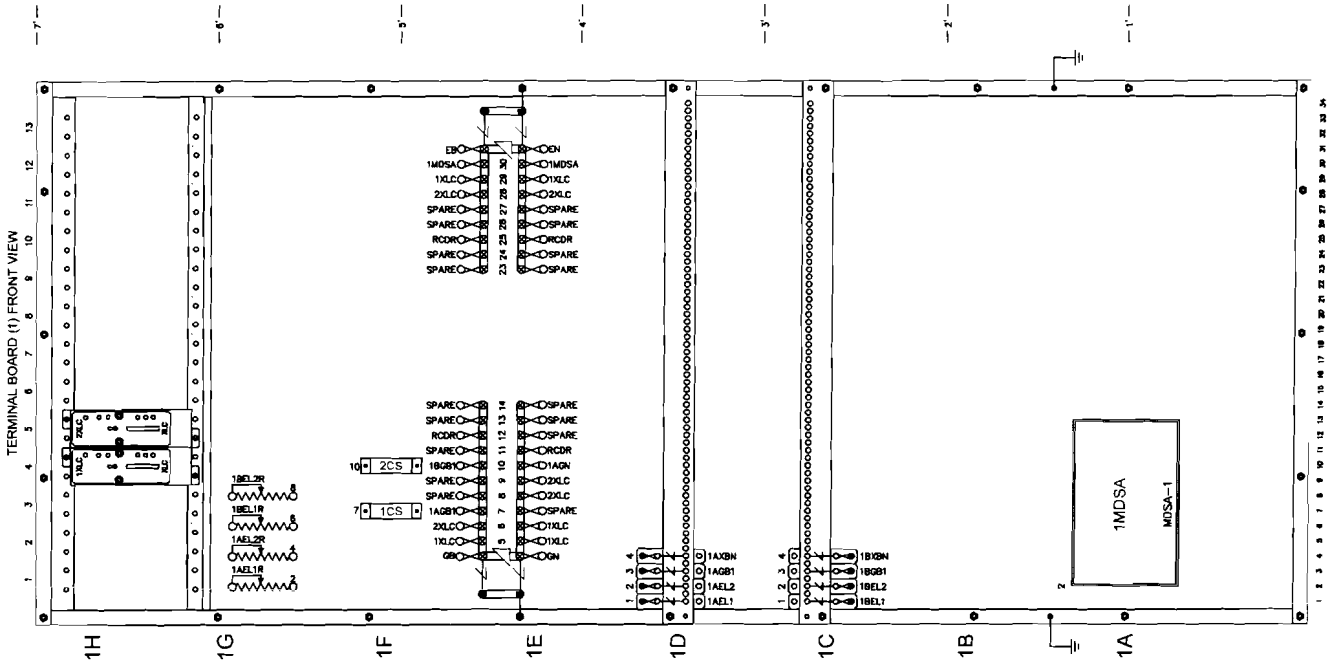

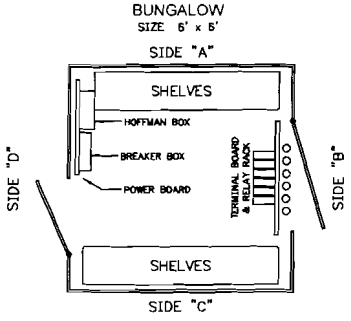

LEGEND:

O = INSULATED NUT

ORIGINAL DATE 09/25/03	RCL Railroad Controls Limited	ILLINOIS RAILWAY	
DRAFTSMAN RCL	LOCATION IL 23 OTTAWA, IL ILLINOIS RAILWAY, INC.		
DESIGNER RCL			
CHECKER RCL			
	TITLE 6X6 CABIN LAYOUT		
REVISION A 11-13-07 SIGNAL SHOP REV	SUB OTTAWA	RRMP 85.10	DOT NO. 065 128B
	RCL NO. A2719	SCALE N.T.S.	SHEET 10 OF 12

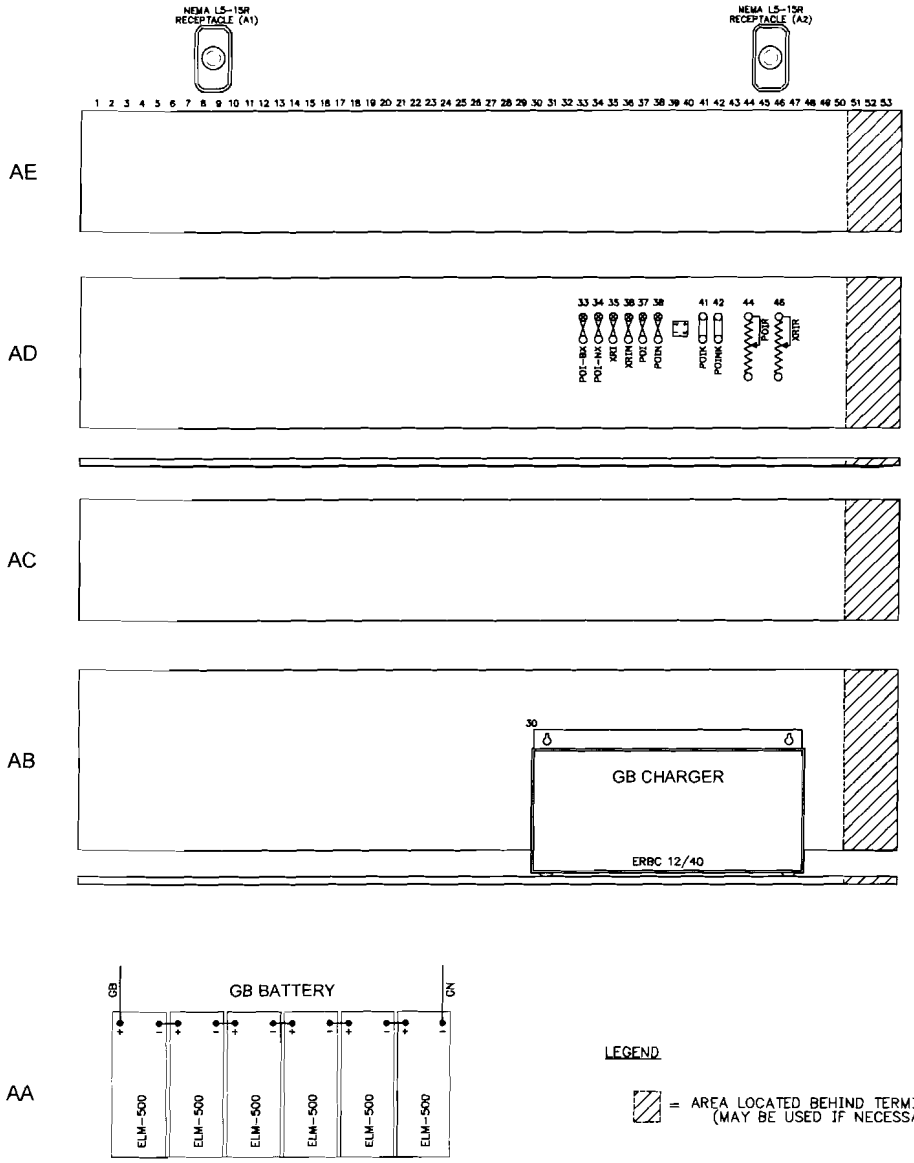

LEGEND

= AREA LOCATED BEHIND TERMINAL BOARD (MAY BE USED IF NECESSARY)

ORIGINAL DATE 09/25/03	RCL Railroad Controls Limited	ILLINOIS RAILWAY	
DRAFTSMAN RCL	LOCATION IL 23 OTTAWA, IL ILLINOIS RAILWAY, INC.		
DESIGNER RCL			
CHECKER RCL	TITLE 6X6 CABIN LAYOUT		
REVISION A 11-13-07 SIGNAL SHOP REV	SUB OTTAWA	MRMP 85.10	DOT NO. 065 128B
	RCL NO. A2719	SCALE N.T.S.	SHEET 11 OF 12

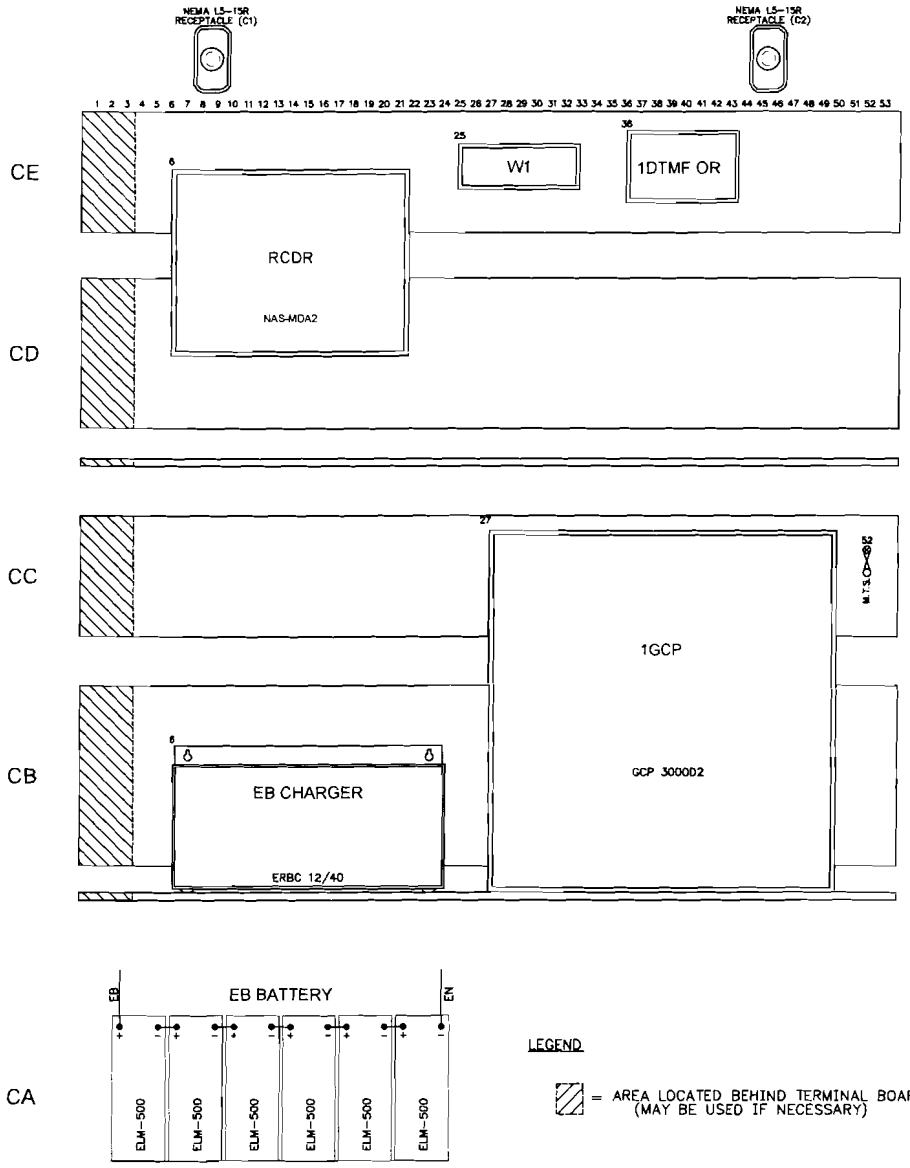

LEGEND

= AREA LOCATED BEHIND TERMINAL BOARD (MAY BE USED IF NECESSARY)

ORIGINAL DATE 09/25/03	RCL Railroad Controls Limited			
DRAFTSMAN RCL	LOCATION IL 23 OTTAWA, IL ILLINOIS RAILWAY, INC.			
DESIGNER RCL				
CHECKER RCL				
	TITLE 6X6 CABIN LAYOUT			
REVISION A	11-13-07 SIGNAL SHOP REV	SUB OTTAWA	RAMP 85.10	DOT NO. 065 128B
		RCL NO. A2719	SCALE N.T.S.	SHEET 12 OF 12