TO PRINCETON

TO LUTHER YARD

N

APPROACH LENGTHS ALLOW FOR:	
TIME IN SECONDS	CWT
	E.B./W.B. APPROACH
STANDARD MUTCD MIN. TIME	20
DESIGNED WARNING TIME	26-30
EQUIPMENT RESPONSE TIME	4
TOTAL TIME	30
MAX SPEED (M.P.H.)	50
APPROACH DISTANCE (FEET)	2190

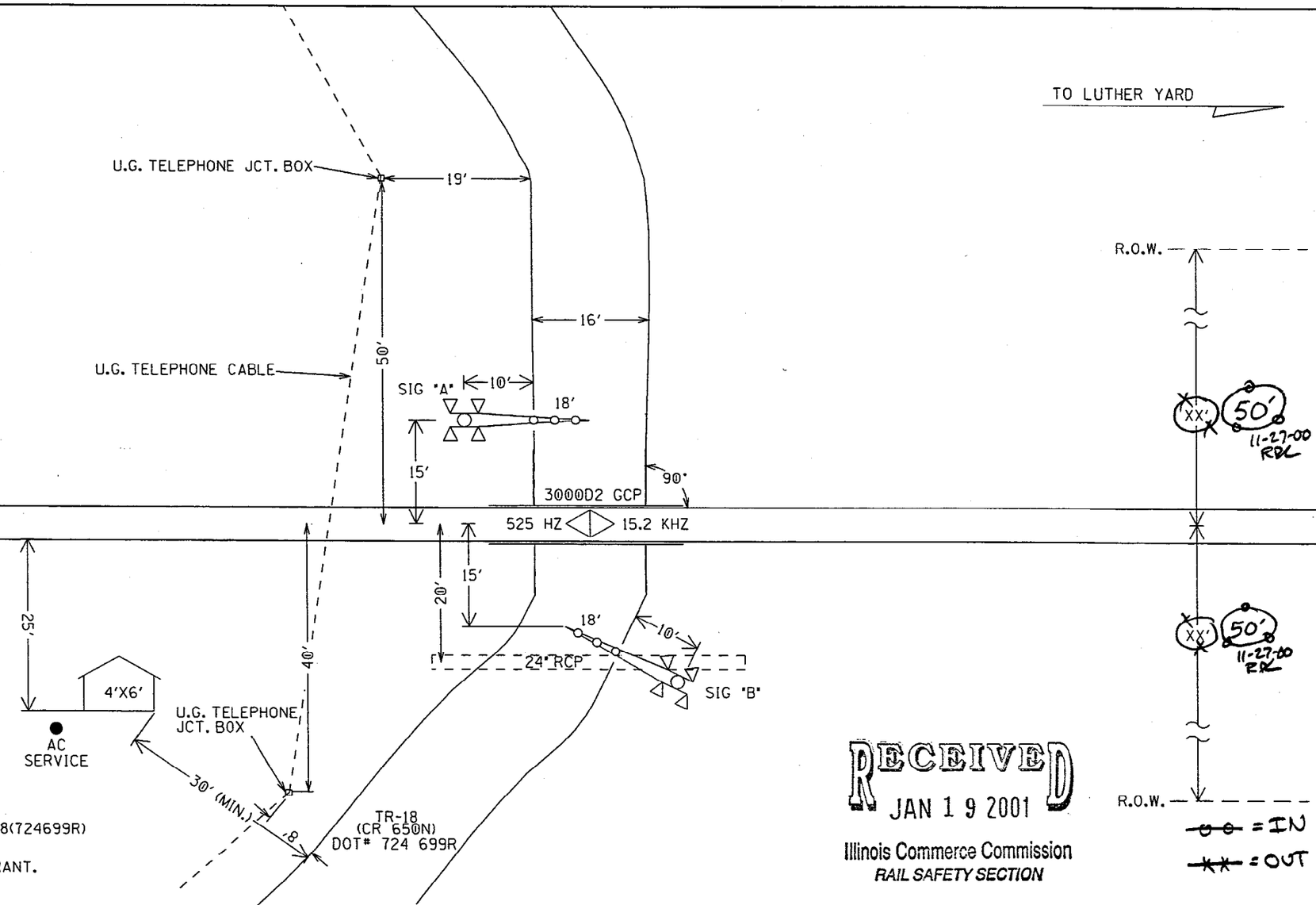

NOTES:

1. MAX. TRAIN SPEED 50 M.P.H.
2. LATITUDE N 28° 48' 25" LONGITUDE W 81° 16' 44"
   ELEVATION 79'
3. RADIO COMBO #1
4. SIGNAL "A" TO HAVE BELL.
5. LOCATE U/G UTILITIES & CABLE BEFORE DIGGING.
6. CROSSING LOCATED IN EDWARDS COUNTY.
7. NEAREST STREET ADDRESS IS
   114 TR 650N
8. NEAREST INTERSECTING STREET IS
   TR 120 E
9. FIELD FORCES TO CLOSE TR-185 (724696V) WHEN TR-18(724699R) AND TR-36(724695N) ARE PLACED IN SERVICE.
10. FIELD FORCES TO EXTEND CULVERT 10' IN NW QUADRANT.
11. UTILITY IN THE AREA - CONTACT:
    FIBER - VERIZON (800) 483-1000
12. NO COMMERCIAL POWER IS AVAILABLE AT TR-18.
    FOR ADDITION SPANS CONTACT:
    POWER - WAYNE-WHITE COUNTIES ELECTRIC COOPERATIVE (888) 871-7695
13. FIELD FORCES AVOID CULVERT IN NW QUADRANT WHEN INSTALLING SIG "B".

RECEIVED
JAN 19 2001
Illinois Commerce Commission
RAIL SAFETY SECTION

STATE PROJECT #R99-305 SCALE: 1" = 20' PROJECT #04.0452 LAYOUT FILE No. 061-04.486

IN SERVICE _____ SIGNED _____ DATE
☐ S&E ENGINEERING COPY
☐ CONSTRUCTION OFFICE COPY
RETURN TO S&E ENG. AFTER COMPLETION
☐ FIELD COPY
RETURN TO CASE AFTER COMPLETION
☐ PROJECT ENGINEER COPY

DESIGNED BY:	
TAH	11-01-00
DRAWN BY:	
RSD	11-01-00
CHECKED BY:	
SAH	11-01-00
IN SERVICE:	
	- -

NORFOLK SOUTHERN

OFFICE OF ASS'T. VICE PRESIDENT COMM. & SIGNAL, ATLANTA, GA.

M.P.: 129.94W

ELLERY, IL
GATES/FLS AT TR-18

FILE No. R-

CADD or DWG. No. SE4021P.01

SHEET No. 1 of 13

REVISION INITIALS

PROPERTY
NORFOLK SOUTHERN RAILWAY CO.

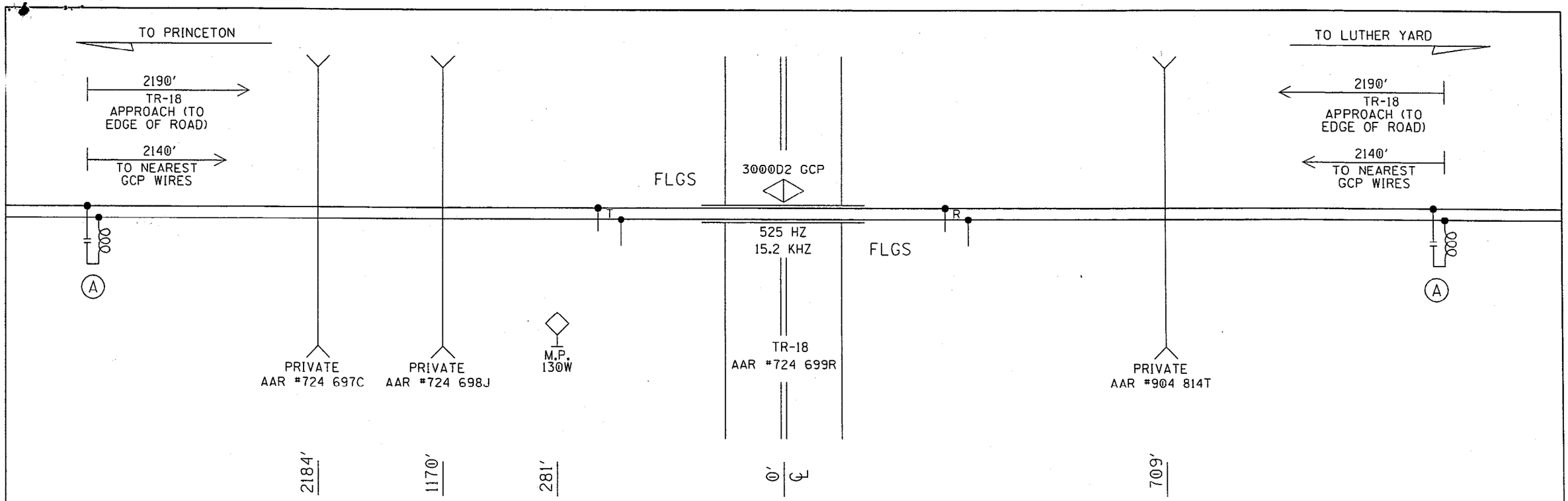

(A) - MF-NBS 62775-3497

PROFILE

DESIGNED BY: TAH 11-01-00	NORFOLK SOUTHERN		
DRAWN BY: RSD 11-01-00	OFFICE OF ASS'T. VICE PRESIDENT COMM. & SIGNAL, ATLANTA, GA.	M.P.:	129.94W
CHECKED BY: SAH 11-01-00	ELLERY, IL GATES/FLS AT TR-18		
IN SERVICE: - -		FILE No.	R-
	CADD or DWG. No. SE4021P.02	SHEET No.	2 of 13

REVISION INITIALS

PROPERTY
NORFOLK SOUTHERN RAILWAY CO.

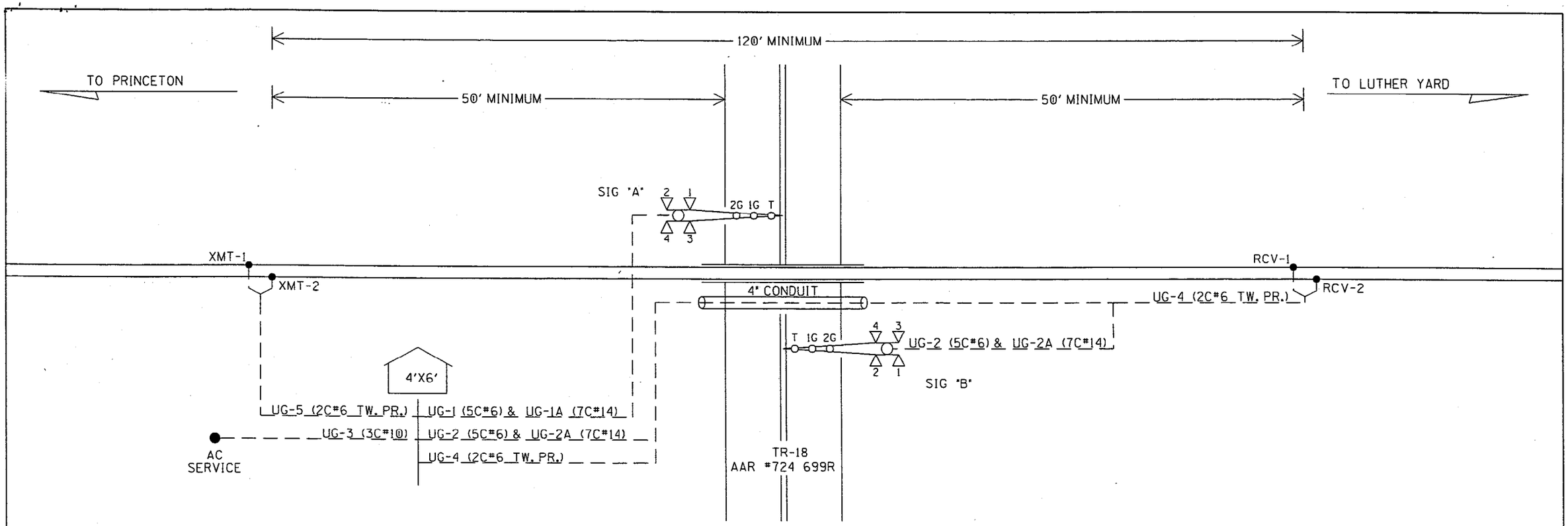

UG-1-5CUG #6
AEZ
AEB
AEC
B16-A
N16-A

UG-2-5CUG #6
BEZ
BEB
BEC
B16-B
N16-B

UG-3-3CUG #10
BX120-A
BX120-B
NX120

UG-4-TW. PR. #6
RCV-1
RCV-2

UG-5-TW. PR. #6
XMT-1
XMT-2

UG-1A-7CUG #14
AXX
AXG
XGP2
1AXX
SPARE
SPARE
SPARE

UG-2A-7CUG #14
BXG
XGP1
XGP
BXX
1BXX
SPARE
SPARE

CABLE

DESIGNED BY: TAH 11-01-00	NORFOLK SOUTHERN		
DRAWN BY: RSD 11-01-00	OFFICE OF ASS'T. VICE PRESIDENT COMM. & SIGNAL, ATLANTA, GA.	M.P.: 129.94W	
CHECKED BY: SAH 11-01-00	ELLERY, IL GATES/FLS AT TR-18		
IN SERVICE: - -		FILE No. R-	
	CADD or DWG. No. SE4021P.03	SHEET No. 3 of 13	

REVISION INITIALS										

PROPERTY
NORFOLK SOUTHERN RAILWAY CO.

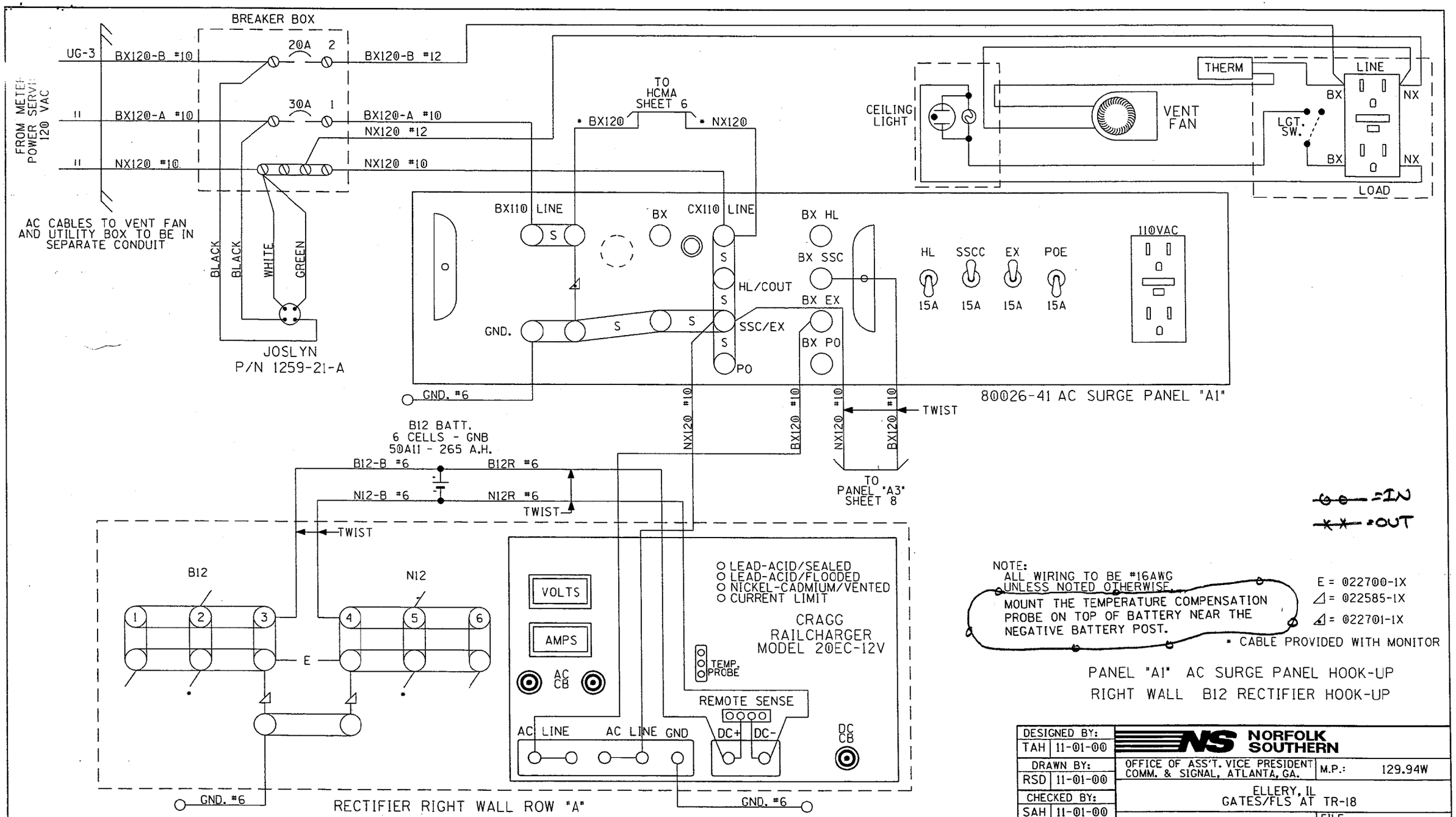

DESIGNED BY: TAH 11-01-00	NORFOLK SOUTHERN		
DRAWN BY: RSD 11-01-00	OFFICE OF ASS'T. VICE PRESIDENT COMM. & SIGNAL, ATLANTA, GA.	M.P.: 129.94W	
CHECKED BY: SAH 11-01-00	ELLERY, IL GATES/FLS AT TR-18		
IN SERVICE: - -		FILE No. R-	
	CADD or DWG. No. SE4021P.04	SHEET No. 4 of 13	

REVISION INITIALS

PROPERTY
NORFOLK SOUTHERN RAILWAY CO.

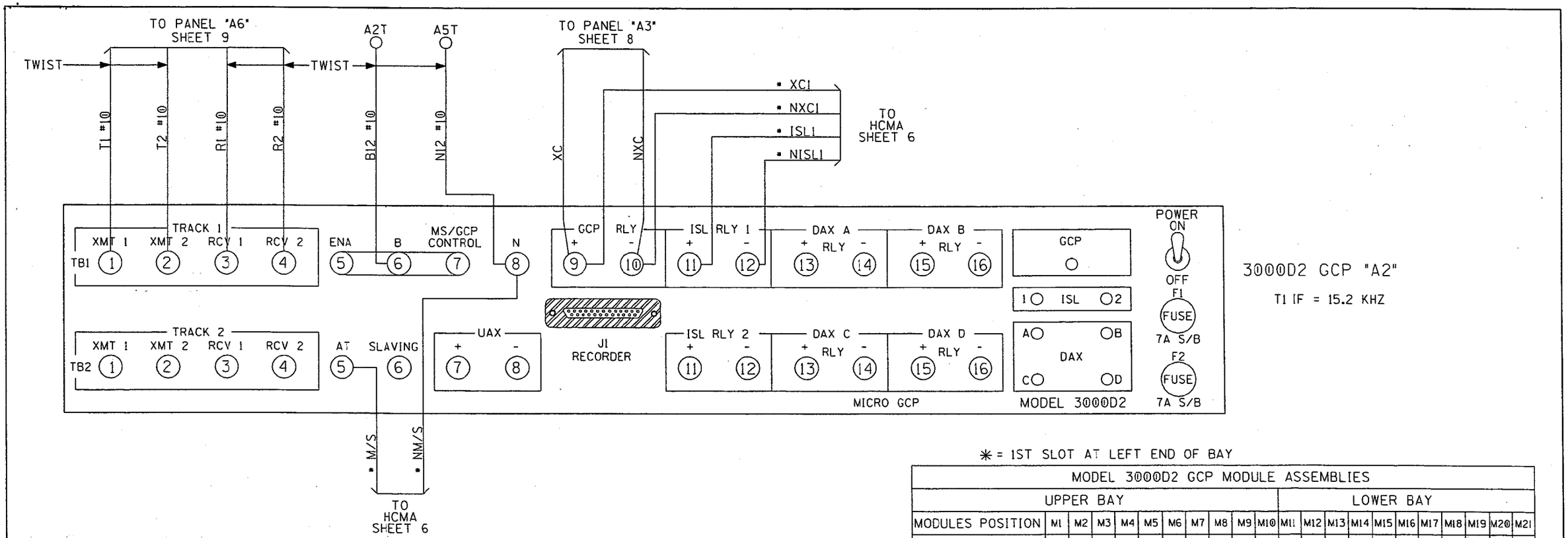

* = 1ST SLOT AT LEFT END OF BAY

MODEL 3000D2 GCP MODULE ASSEMBLIES																						
UPPER BAY											LOWER BAY											
MODULES POSITION	M1	M2	M3	M4	M5	M6	M7	M8	M9	M10	M11	M12	M13	M14	M15	M16	M17	M18	M19	M20	M21
MODULE NUMBERS	80211-f(1)*	80211-f(2)	80012 T/R 1	80012 T/R 2	80013 RLY DRV	80214 PROCS	80015 LOGG	80016 (1) DAX	80016 (2)DAX	80020 +80017	80211-f(1)*	80211-f(2)	80012 T/R 1	80012 T/R 2	80013 RLY DRV	80214 PROCS	80015 LOGG	80016 (1) DAX	80016 (2)DAX	80020 +80017	80028 XFRTMR
MODULES USED	X		X		X	X				X	X		X		X	X				X	X

NOTES:
1 - SEE IPI INSTRUCTION AND INSTALLATION MANUAL FOR 80211 ISLAND CALIBRATION PROCEDURE.

2 - TOGGLE SWITCH ON MOTHER BOARD:
UP = DUAL FREQ.
DOWN = SINGLE FREQ.

3 - ALL WIRING #16AWG UNLESS NOTED OTHERWISE.

* CABLE PROVIDED WITH MONITOR

PANEL "A2" 3000D2 GCP HOOK-UP

3000D2 PROGRAMMING

# OF TKS/TRANSCEIVERS	1
T1 FREQUENCY	525 Hz
T2 FREQUENCY	Hz
T1 UNI/BIDIRECTIONAL	BI
T2 UNI/BIDIRECTIONAL	
T1 POWER-MAX/MED	MED
T2 POWER-MAX/MED	
T1 PRED/MS	PRED
T2 PRED/MS	
T1 WARNING TIME	30 Sec
T2 WARNING TIME	Sec
T1 APPROACH DIST	2140 Ft
T2 APPROACH DIST	Ft
UAX PU DLY (0=OFF)	0 Sec
ENA/UAX PU DLY(0=OFF)	0 Sec
T1 ISL DIST	120 Ft
T2 ISL DIST	Ft
# OF DAX'S	0 Ea

DAX A = T1/T2?	TRACK=
DAX A DIST	Ft
DAX A WARN TIME	Sec
DAX B = T1/T2?	TRACK=
DAX B DIST	Ft
DAX B WARN TIME	Sec
DAX C = T1/T2?	TRACK=
DAX C DIST	Ft
DAX C WARN TIME	Sec
DAX D = T1/T2?	TRACK=
DAX D DIST	Ft
DAX D WARN TIME	Sec
MASTER?/SLAVE?	MASTER
PASSWORD NO/YES	NO
RECORDER NO/YES	NO

EXPANDED PROGRAMMING

T1-SW TO MS AT 10 % OF EZ	
T2-SW TO MS AT % OF EZ	
T1-DELAY MS TO GCP	0 Sec
T2-DELAY MS TO GCP	Sec
T1 PRIME PRE. OFFSET	0 Ft
T2 PRIME PRE. OFFSET	Ft
PRIME PU TIME DELAY	15 Sec
DAX A PU DELAY	Sec
DAX B PU DELAY	Sec
DAX C PU DELAY	Sec
DAX D PU DELAY	Sec
ENHANCED DETECT MODE	OFF
BACK-TO-BACK	OFF
STATION STOP TIMER	10 Sec
T1# OF TRK. WIRES 4/6	4
T2# OF TRK. WIRES 4/6	
LOW EX ADJUSTMENT	0

DESIGNED BY: TAH 11-01-00	NORFOLK SOUTHERN		
DRAWN BY: RSD 11-01-00	OFFICE OF ASS'T. VICE PRESIDENT COMM. & SIGNAL, ATLANTA, GA.	M.P.: 129.94W	
CHECKED BY: SAH 11-01-00	ELLERY, IL GATES/FLS AT TR-18		
IN SERVICE: - -		FILE No. R-	
	CADD or DWG. No. SE4021P.05	SHEET No. 5 of 13	

REVISION INITIALS										

PROPERTY
NORFOLK SOUTHERN RAILWAY CO.

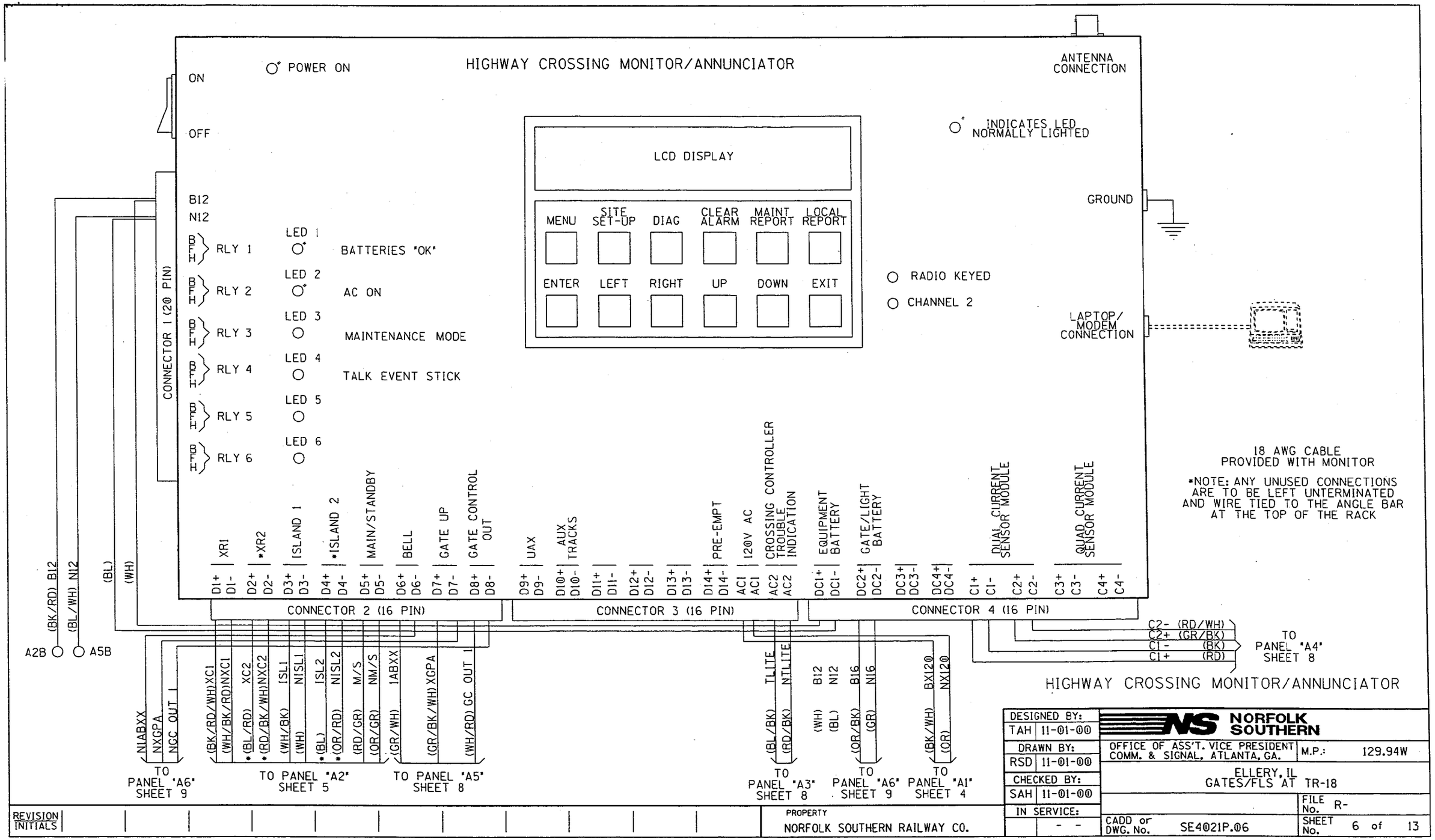
HIGHWAY CROSSING MONITOR/ANNUNCIATOR
POWER ON
ON
OFF
ANTENNA CONNECTION
INDICATES LED NORMALLY LIGHTED
LCD DISPLAY
MENU
SITE SET-UP
DIAG
CLEAR ALARM
MAINT REPORT
LOCAL REPORT
ENTER
LEFT
RIGHT
UP
DOWN
EXIT
GROUND
RADIO KEYED
CHANNEL 2
LAPTOP/ MODEM CONNECTION
B12
N12
CONNECTOR 1 (20 PIN)
RLY 1
RLY 2
RLY 3
RLY 4
RLY 5
RLY 6
LED 1
LED 2
LED 3
LED 4
LED 5
LED 6
BATTERIES "OK"
AC ON
MAINTENANCE MODE
TALK EVENT STICK
18 AWG CABLE PROVIDED WITH MONITOR
*NOTE: ANY UNUSED CONNECTIONS ARE TO BE LEFT UNTERMINATED AND WIRE TIED TO THE ANGLE BAR AT THE TOP OF THE RACK
XR1
*XR2
ISLAND 1
*ISLAND 2
MAIN/STANDBY
BELL
GATE UP
GATE CONTROL OUT
UAX
AUX TRACKS
PRE-EMPT
120V AC
CROSSING CONTROLLER TROUBLE INDICATION
EQUIPMENT BATTERY
GATE/LIGHT BATTERY
DUAL CURRENT SENSOR MODULE
QUAD CURRENT SENSOR MODULE
D1+ D1-
D2+ D2-
D3+ D3-
D4+ D4-
D5+ D5-
D6+ D6-
D7+ D7-
D8+ D8-
D9+ D9-
D10+ D10-
D11+ D11-
D12+ D12-
D13+ D13-
D14+ D14-
AC1 AC1
AC2 AC2
DC1+ DC1-
DC2+ DC2-
DC3+ DC3-
DC4+ DC4-
C1+ C1-
C2+ C2-
C3+ C3-
C4+ C4-
CONNECTOR 2 (16 PIN)
CONNECTOR 3 (16 PIN)
CONNECTOR 4 (16 PIN)
(BK/RD) B12
(BL/WH) N12
(BL)
(WH)
A2B
A5B
C2- (RD/WH)
C2+ (GR/BK)
C1- (BK)
C1+ (RD)
TO PANEL "A4" SHEET 8
HIGHWAY CROSSING MONITOR/ANNUNCIATOR
N1ABXX
NXGPA
NGC OUT 1
(BK/RD/WH)XC1
(WH/BK/RD)NXC1
*(BL/RD) XC2
*(RD/BK/WH)NXC2
(WH/BK) ISL1
(WH) NISL1
*(BL) ISL2
*(OR/RD) NISL2
(RD/GR) M/S
(OR/GR) NM/S
(GR/WH) 1ABXX
(GR/BK/WH) XGPA
(WH/RD) GC OUT 1
(BL/BK) TLITE
(RD/BK) NTLITE
(WH) B12
(BL) N12
(OR/BK) B16
(GR) N16
(BK/WH) BX120
(OR) NX120
TO PANEL "A6" SHEET 9
TO PANEL "A2" SHEET 5
TO PANEL "A5" SHEET 8
TO PANEL "A3" SHEET 8
TO PANEL "A6" SHEET 9
TO PANEL "A1" SHEET 4
REVISION INITIALS
PROPERTY
NORFOLK SOUTHERN RAILWAY CO.
DESIGNED BY: TAH 11-01-00
DRAWN BY: RSD 11-01-00
CHECKED BY: SAH 11-01-00
IN SERVICE: - -
NORFOLK SOUTHERN
OFFICE OF ASS'T. VICE PRESIDENT COMM. & SIGNAL, ATLANTA, GA.
M.P.: 129.94W
ELLERY, IL
GATES/FLS AT TR-18
FILE No. R-
CADD or DWG. No. SE4021P.06
SHEET No. 6 of 13

SITE SET UP PROCEDURE	
FUNCTION	LED DISPLAY
DATE	- -
TIME	:
DAYLIGHT SAVINGS TIME	YES
SITE NAME	TR-18
DOT NUMBER	724 699R
MILEPOST	129.94W
HOP ALARMS ?	NO HOP ALARMS
# OF TRACKS	1

CONTROL SYSTEM CONFIGURATION MENU QUESTIONS	
THE QUESTION	SELECT FROM MENU OPTION
GATES INSTALLED?	GATES INSTALLED
AC/DC POWERED LAMPS?	DC POWERED LAMPS
CROSSING CONTROLLER?	CROSSING CONTROLLER
MAIN/STANDBY GCP?	MASTER/STANDBY
# OF CURRENT SENSOR LOOPS USED?	C1, C2 USED
# OF BATTERY BANKS MONITORED?	TWO BATTERY BANKS
IS THERE A UAX INPUT (IS INPUT D9 WIRED)?	NO UAX INSTALLED
ARE ALARMS BROADCAST ON RADIO?	DO NOT TALK ALARMS
ARE AUXILIARY TRACKS MONITORED (IS INPUT D10 WIRED)?	NO AUXILIARY TRACKS
IS THIS UNIT A FRA TESTER?	NO FRA TESTER
LAMP CONFIGURATION	SIMPLE/NORMAL
IS BELL DETECTOR INSTALLED?	NO BELL DETECTOR INSTALLED
IS PRE-EMPT CIRCUIT USED?	NO PRE-EMPT CIRCUIT
DOUBLE TRACK ONLY. HOW MANY XR INPUTS?	

VERIFY NUMBER OF BULBS	
CURR 1: LAMP SET UP	8 BULBS
CURR 2: LAMP SET UP	8 BULBS
CURR 3: LAMP SET UP	BULBS
CURR 4: LAMP SET UP	BULBS
SIMPLE OR COMPLEX LAMP CALIBRATION	SIMPLE

VERIFY THE BATTERY SUPPLY VOLTAGES	
BATTERY VOLTAGE AT INPUT DC1	VOLT 1: .
BATTERY VOLTAGE AT INPUT DC2	VOLT 2: .
BATTERY VOLTAGE AT INPUT DC3	VOLT 3: .
BATTERY VOLTAGE AT INPUT DC4	VOLT 4: .

HCMA SET UP CHART

DESIGNED BY: TAH 11-01-00	NORFOLK SOUTHERN		
DRAWN BY: RSD 11-01-00	OFFICE OF ASS'T. VICE PRESIDENT COMM. & SIGNAL, ATLANTA, GA.	M.P.: 129.94W	
CHECKED BY: SAH 11-01-00	ELLERY, IL GATES/FLS AT TR-18		
IN SERVICE: - -		FILE No. R-	
	CADD or DWG. No. SE4021P.07	SHEET No. 7 of 13	

REVISION INITIALS										

PROPERTY
NORFOLK SOUTHERN RAILWAY CO.

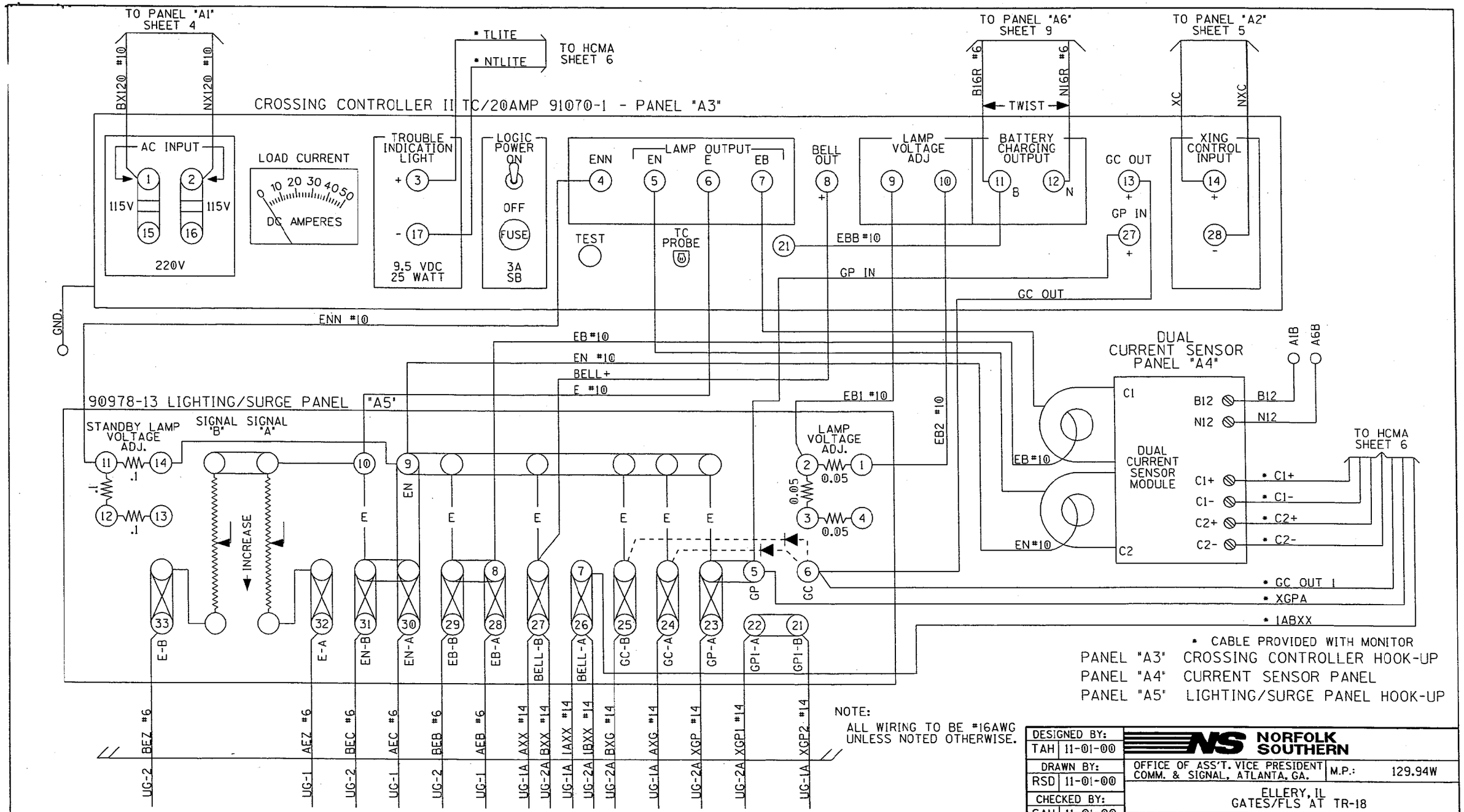

* CABLE PROVIDED WITH MONITOR

PANEL "A3" CROSSING CONTROLLER HOOK-UP
PANEL "A4" CURRENT SENSOR PANEL
PANEL "A5" LIGHTING/SURGE PANEL HOOK-UP

NOTE:
ALL WIRING TO BE #16AWG UNLESS NOTED OTHERWISE.

DESIGNED BY: TAH 11-01-00	NORFOLK SOUTHERN		
DRAWN BY: RSD 11-01-00	OFFICE OF ASS'T. VICE PRESIDENT COMM. & SIGNAL, ATLANTA, GA.	M.P.:	129.94W
CHECKED BY: SAH 11-01-00	ELLERY, IL GATES/FLS AT TR-18		
IN SERVICE: - -		FILE No.	R-
	CADD or DWG. No. SE4021P.08	SHEET No.	8 of 13

REVISION INITIALS											

PROPERTY
NORFOLK SOUTHERN RAILWAY CO.

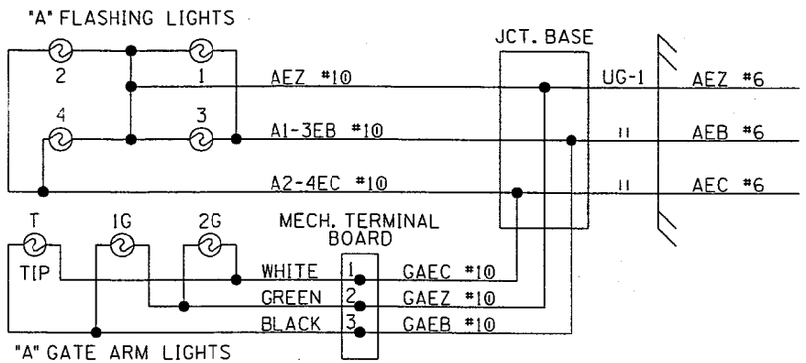

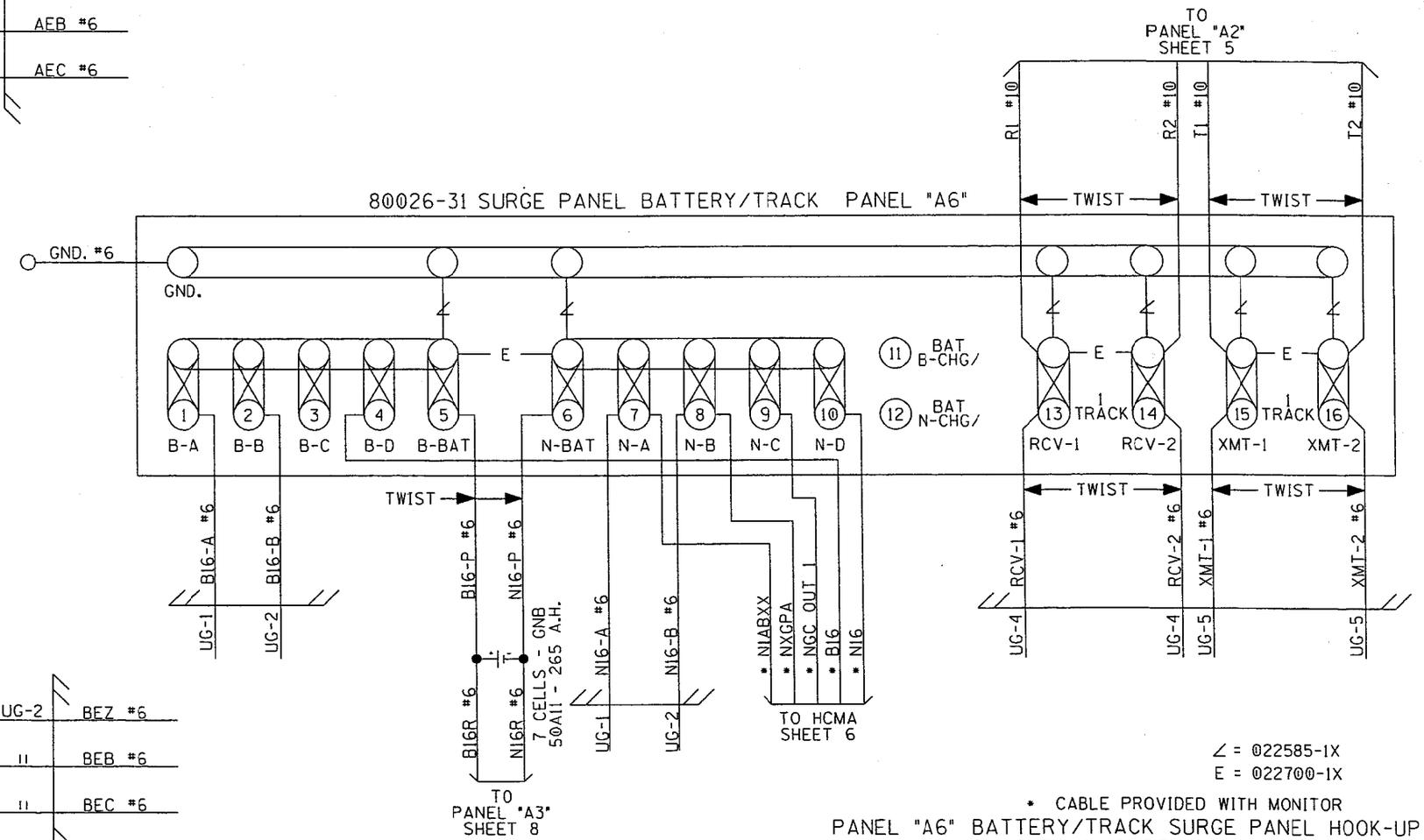

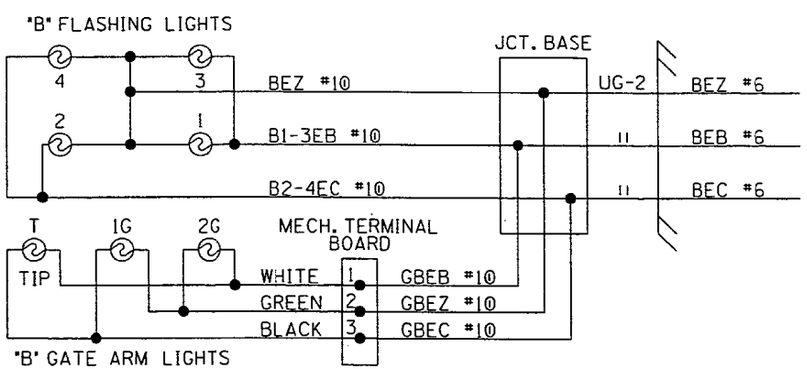

∠ = 022585-1X
E = 022700-1X

* CABLE PROVIDED WITH MONITOR

PANEL "A6" BATTERY/TRACK SURGE PANEL HOOK-UP
FLASHER & GATE LIGHTS

NOTE:

MOUNT THE TEMPERATURE COMPENSATION PROBE ON TOP OF BATTERY NEAR THE NEGATIVE BATTERY POST.

ALL WIRING TO BE #16AWG UNLESS NOTED OTHERWISE.

DESIGNED BY: TAH 11-01-00	NORFOLK SOUTHERN		
DRAWN BY: RSD 11-01-00	OFFICE OF ASS'T. VICE PRESIDENT COMM. & SIGNAL, ATLANTA, GA.	M.P.:	129.94W
CHECKED BY: SAH 11-01-00	ELLERY, IL GATES/FLS AT TR-18		
IN SERVICE: - -		FILE No.	R-
	CADD or DWG. No. SE4021P.09	SHEET No.	9 of 13

REVISION INITIALS										

PROPERTY
NORFOLK SOUTHERN RAILWAY CO.

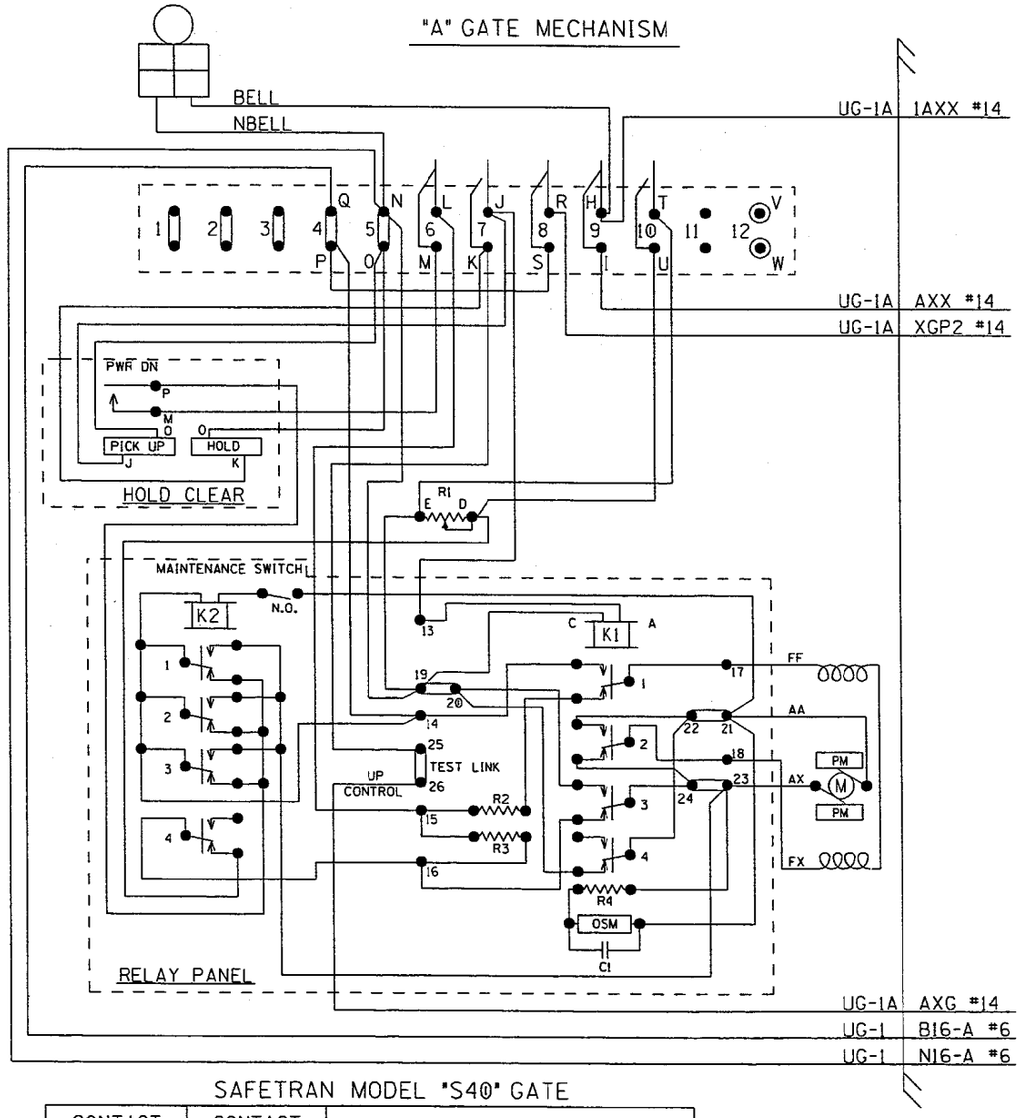

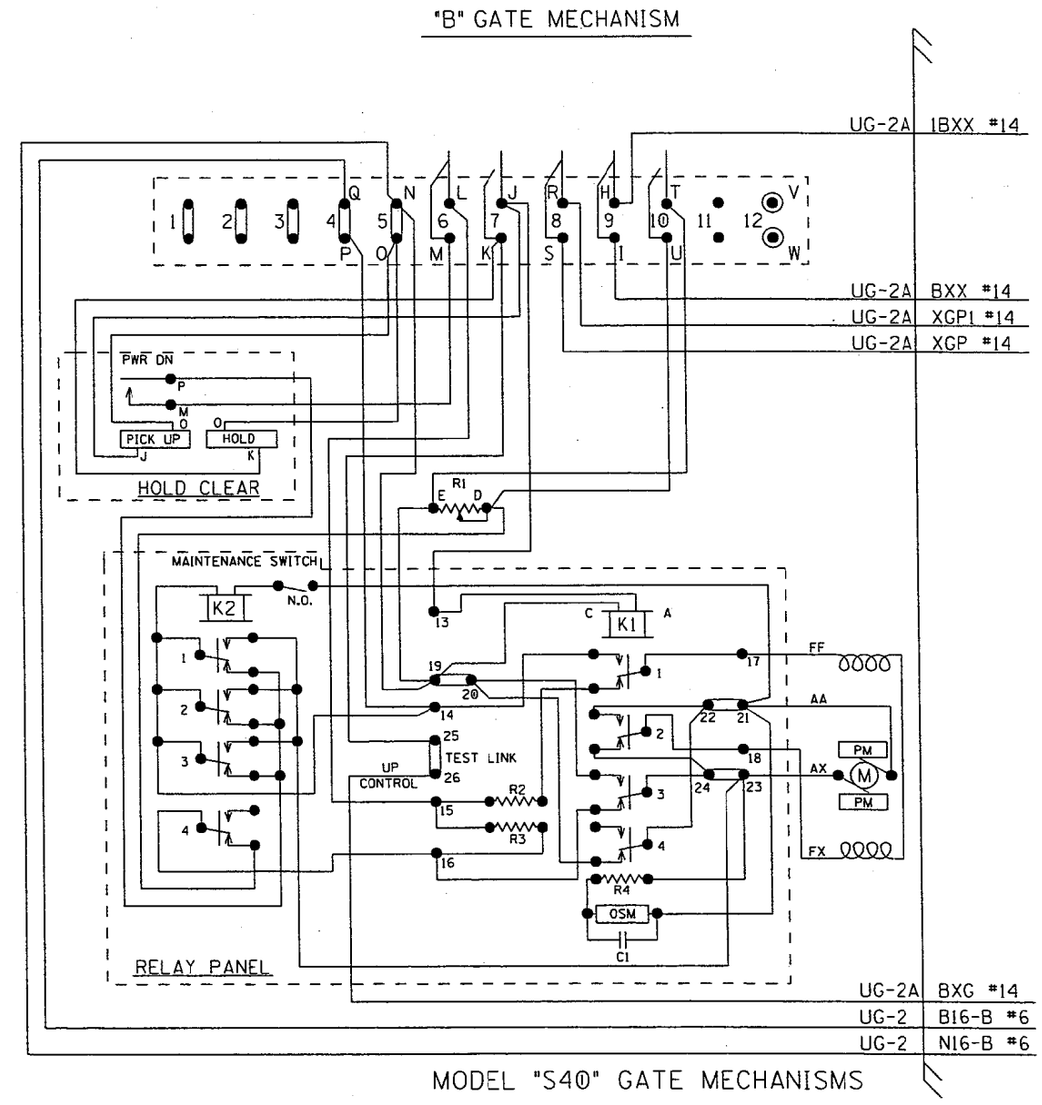

SAFETRAN MODEL "S40" GATE

MODEL "S40" GATE MECHANISMS

CONTACT SPACE	CONTACT CLOSED AT	FUNCTION OF CONTACT
(6) L-M	45°-90°	POWER DOWN CONTROL
(7) J-K	0°-89°	POWER UP CONTROL
(8) R-S	83°-90°	FLASHING LGT. CONTROL
(9) H-I	5°-90°	BELL CONTROL
(10) T-U	0°-5°	HORIZONTAL SNUB

BELL IS TO OPERATE FROM 90 TO 5 DEGREES WHILE GATE IS DESCENDING.
BELL IS NOT TO OPERATE WHILE GATE IS ASCENDING.
SSCC MODULE 90983 (LEVEL "G" AND LATER) SHOULD HAVE BELL ON/OFF PINS SHORTED IN "OFF" POSITION TO ACCOMPLISH THE ABOVE.
SEE SAFETRAN SSCC MANUAL FOR DETAILS.

DESIGNED BY: TAH	11-01-00
DRAWN BY: RSD	11-01-00
CHECKED BY: SAH	11-01-00
IN SERVICE:	- -

NORFOLK SOUTHERN

OFFICE OF ASS'T. VICE PRESIDENT COMM. & SIGNAL, ATLANTA, GA.

M.P.: 129.94W

ELLERY, IL
GATES/FLS AT TR-18

FILE No. R-

CADD or DWG. No. SE4021P.10

SHEET No. 10 of 13

REVISION INITIALS

PROPERTY
NORFOLK SOUTHERN RAILWAY CO.

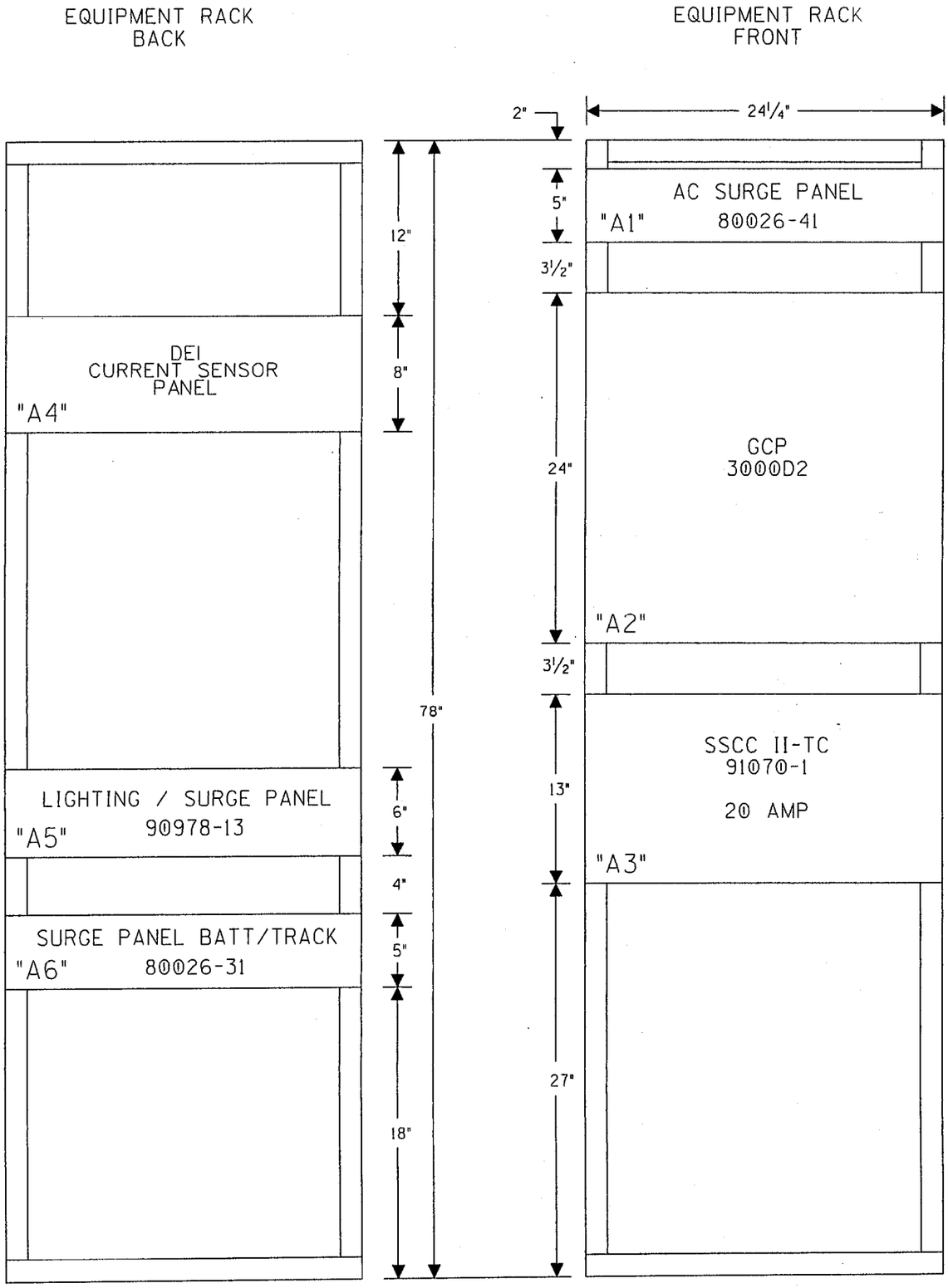

RACK PLACEMENT

REVISION INITIALS

PROPERTY
NORFOLK SOUTHERN RAILWAY CO.

DESIGNED BY: TAH 11-01-00
DRAWN BY: RSD 11-01-00
CHECKED BY: SAH 11-01-00
IN SERVICE: - -

NORFOLK SOUTHERN

OFFICE OF ASS'T. VICE PRESIDENT
COMM. & SIGNAL, ATLANTA, GA.

M.P.: 129.94W

ELLERY, IL
GATES/FLS AT TR-18

CADD or DWG. No. SE4021P.11

FILE No. R-

SHEET No. 11 of 13

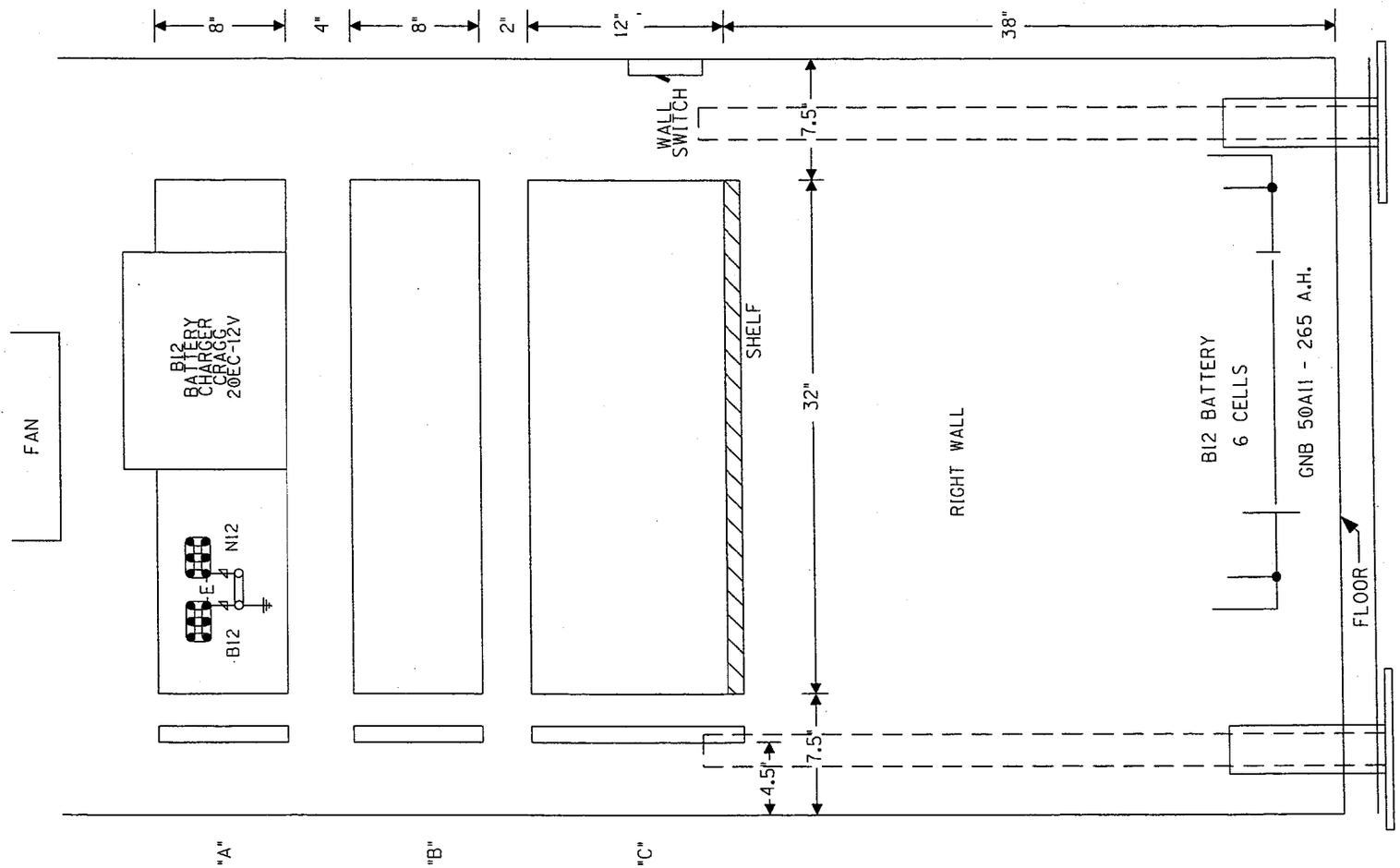

4' X 6' HOUSE (RIGHT SIDE)

DESIGNED BY: TAH 11-01-00	NORFOLK SOUTHERN		
DRAWN BY: RSD 11-01-00	OFFICE OF ASS'T. VICE PRESIDENT COMM. & SIGNAL, ATLANTA, GA.	M.P.:	129.94W
CHECKED BY: SAH 11-01-00	ELLERY, IL GATES/FLS AT TR-18		
IN SERVICE: - -		FILE No.	R-
	CADD or DWG. No. SE4021P.12	SHEET No.	12 of 13

REVISION INITIALS

PROPERTY
NORFOLK SOUTHERN RAILWAY CO.

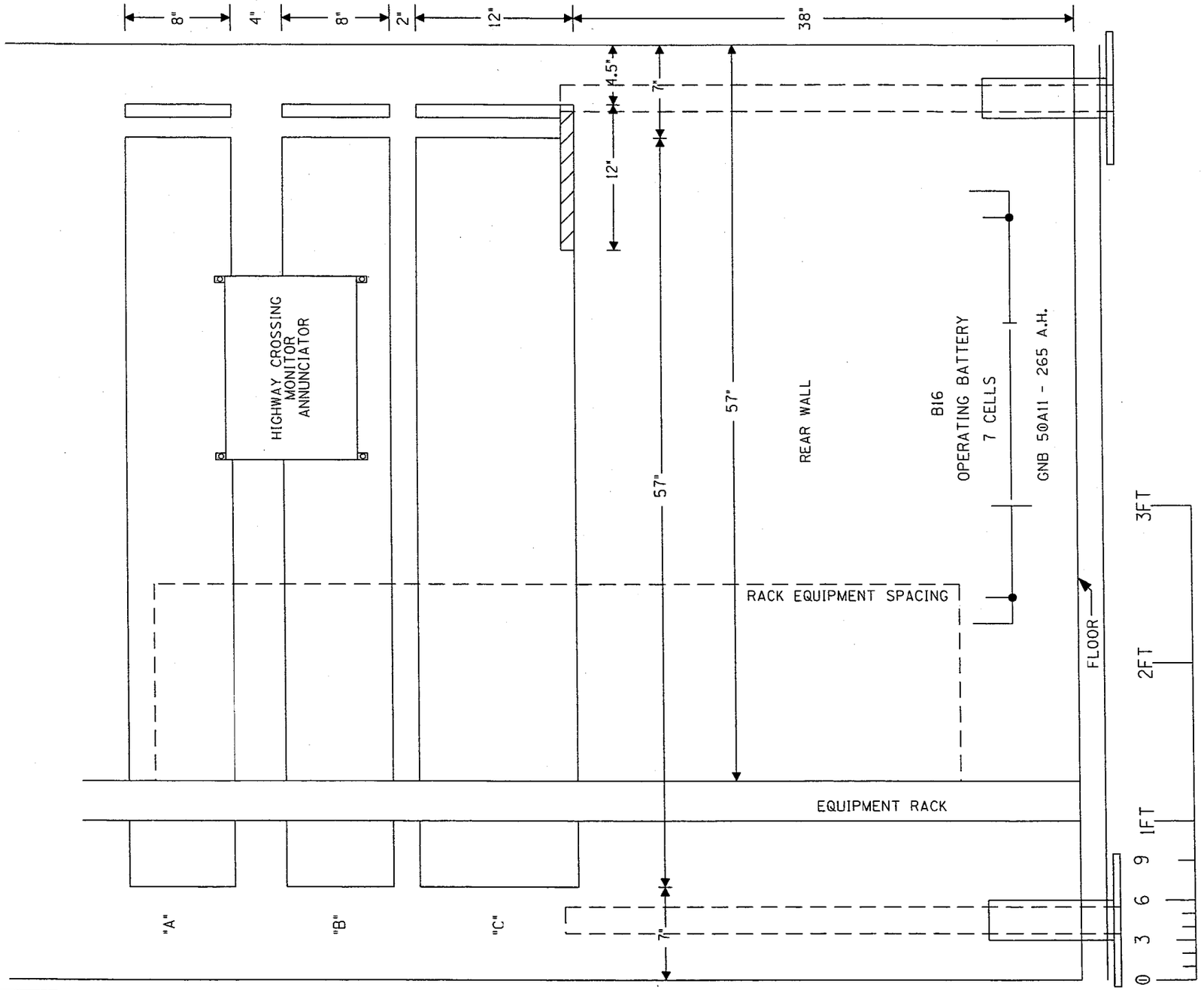

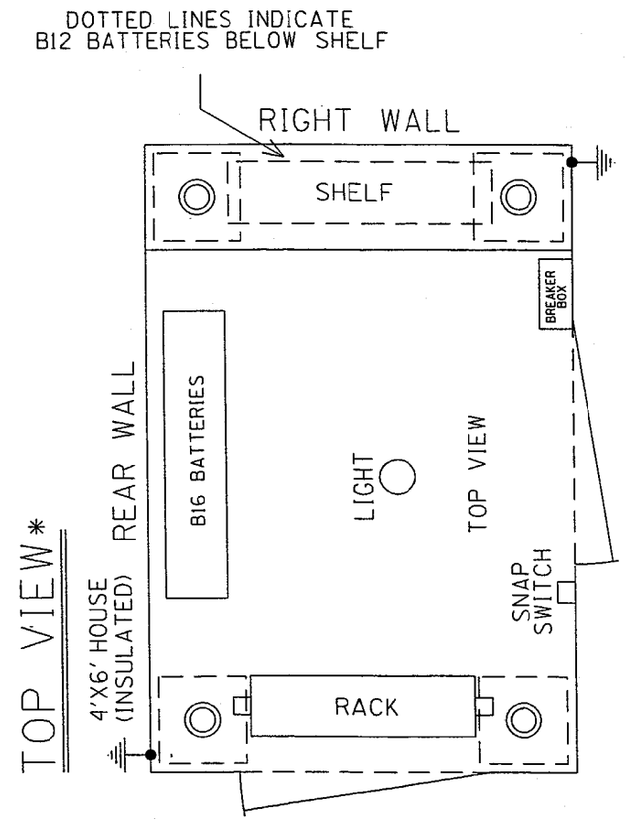

(4) ADJUSTABLE PIERS - 3" O.D. X 48" LONG WITH 12" X 12" PLATE ON BOTTOM, SLEEVE 3.5" X 6" ABOVE FLOOR, SELF DRILLED WITH 4" HOLE TO PERMIT SHIPPING

* - ½ SCALE

4' X 6' HOUSE (REAR & TOP VIEW)

DESIGNED BY: TAH 11-01-00	NORFOLK SOUTHERN		
DRAWN BY: RSD 11-01-00	OFFICE OF ASS'T. VICE PRESIDENT COMM. & SIGNAL, ATLANTA, GA.	M.P.:	129.94W
CHECKED BY: SAH 11-01-00	ELLERY, IL GATES/FLS AT TR-18		
IN SERVICE: - -		FILE No.	R-
	CADD or DWG. No. SE4021P.13	SHEET No.	13 of 13

REVISION INITIALS

PROPERTY
NORFOLK SOUTHERN RAILWAY CO.