# INDEX

## CONTENTS


| SH. NO. | | REVISION NO. 1 | 2 | 3 | 4 | 5 | 6 | 7 | 8 | 9 |
|---|---|---|---|---|---|---|---|---|---|---|
| I01 | INDEX AND REVISIONS | | | | | | | | | |
| S01 | TRACK AND SIGNAL PLAN | | | | | | | | | |
| P01 | MINIMUM PROGRAM STEPS REPORT CWE-47 | | | | | | | | | |
| E01 | POWER DISTRIBUTION | | | | | | | | | |
| C01 | DETECTION DEVICE CONSIST CWE-47 | | | | | | | | | |
| C02 | DETECTION CIRCUITRY CWE-47 | | | | | | | | | |
| C03 | DETECTION CIRCUITRY CWE-47 | | | | | | | | | |
| C04 | CROSSING WARNING DEVICE GATE CIRCUITRY | | | | | | | | | |
| C05 | CROSSING WARNING DEVICE LIGHT CIRCUITRY | | | | | | | | | |
| C06 | CROSSING WARNING DEVICE CIRCUITRY | | | | | | | | | |
| C07 | SEAR II1 CONFIGURATION & FUNCTIONS | | | | | | | | | |


= PLANS SENT TO FIELD (DISTRIBUTED)

= PLANS AS-IN-SERVICED (UP TO DATE)

REVISIONS

| REV. NO. | PROJECT NO. | DESIGN DATE | IN SERVICE DATE | REVISION DATE |
|---|---|---|---|---|
| 1 | IL2007011 | 04-23-07 | | |

TO BE COMPLETED ON A.I.S.

NEW WORK

SAFETRAN systems

PROJECT #: IL2007011

DES/CHKD BY: DCK/SWS

DATE: 04-23-07

= NOTE

4K.I01
REV. 12-19-06

CSX TRANSPORTATION

RAIL TRANSPORT GROUP ENGINEERING
COMMUNICATIONS AND SIGNALS

EE WASHINGTON TO BLACK LANE

TR-54 (500 E) (152845M)

INDEX AND REVISIONS

SUMNER, IL M.P. BC-205.47

| DESIGNED | DIGITIZED | CHECKED | DATE |
|---|---|---|---|
| SAF/DCK | SAF/DCK | SAF/SWS | 04-23-07 |

| DESIGN DATE | REV. NO. | DRAWING | SHEET NO | FILE | SHEET |
|---|---|---|---|---|---|
| 04-23-07 | 1 | ----- | ----- | BC20547 | I01 |

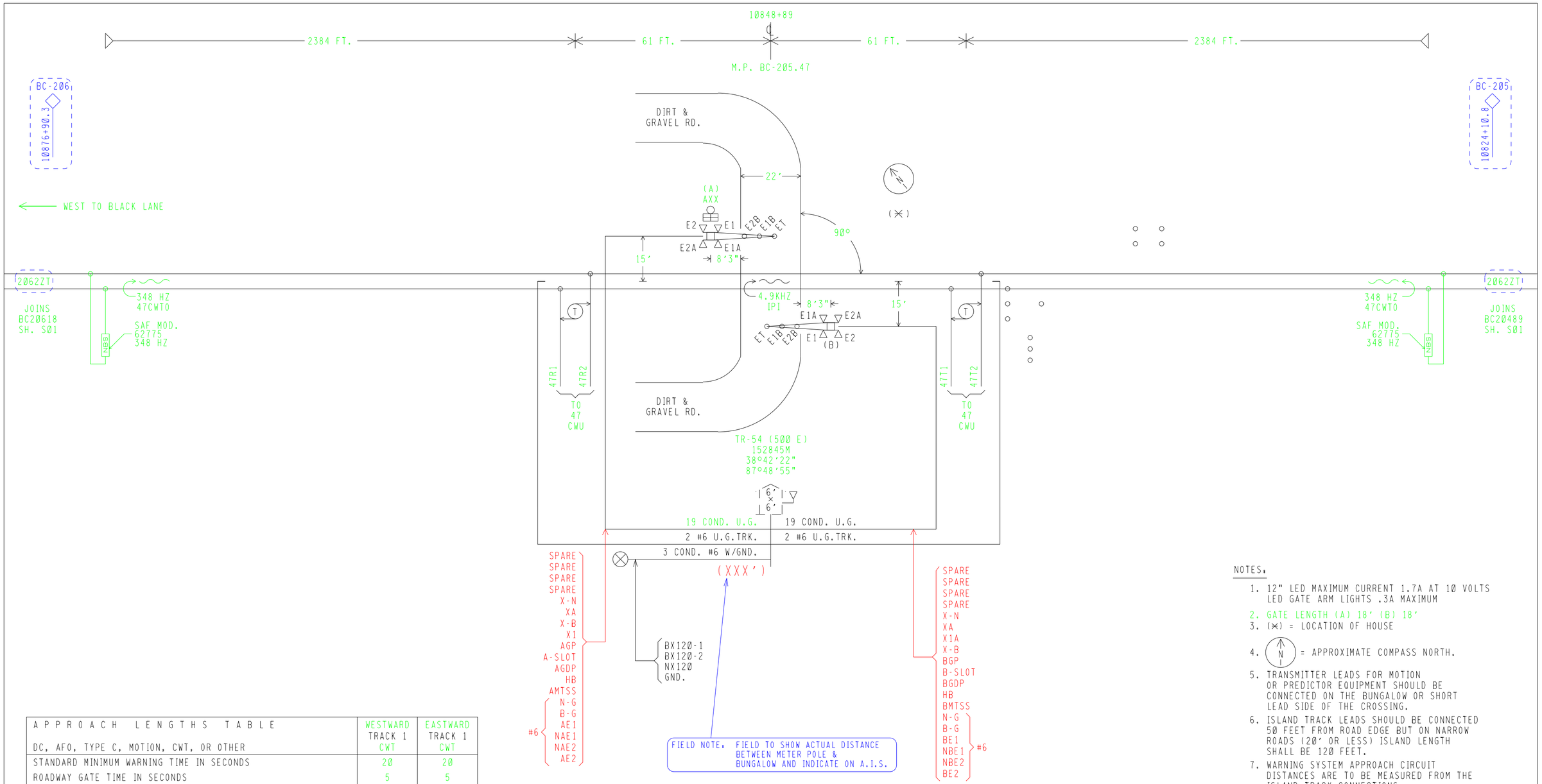


FIELD NOTE. FIELD TO SHOW ACTUAL DISTANCE BETWEEN METER POLE & BUNGALOW AND INDICATE ON A.I.S.

NOTES.

1. 12" LED MAXIMUM CURRENT 1.7A AT 10 VOLTS LED GATE ARM LIGHTS .3A MAXIMUM
2. GATE LENGTH (A) 18' (B) 18'
3. (✕) = LOCATION OF HOUSE
4. (N) = APPROXIMATE COMPASS NORTH.
5. TRANSMITTER LEADS FOR MOTION OR PREDICTOR EQUIPMENT SHOULD BE CONNECTED ON THE BUNGALOW OR SHORT LEAD SIDE OF THE CROSSING.
6. ISLAND TRACK LEADS SHOULD BE CONNECTED 50 FEET FROM ROAD EDGE BUT ON NARROW ROADS (20' OR LESS) ISLAND LENGTH SHALL BE 120 FEET.
7. WARNING SYSTEM APPROACH CIRCUIT DISTANCES ARE TO BE MEASURED FROM THE ISLAND TRACK CONNECTIONS.

| APPROACH LENGTHS TABLE<br>DC, AFO, TYPE C, MOTION, CWT, OR OTHER | WESTWARD TRACK 1 CWT | EASTWARD TRACK 1 CWT |
|---|---|---|
| STANDARD MINIMUM WARNING TIME IN SECONDS | 20 | 20 |
| ROADWAY GATE TIME IN SECONDS | 5 | 5 |
| CLEARANCE TIME IN SECONDS | 0 | 0 |
| DOT TRAFFIC LIGHT SIMULTANEOUS PREEMPT TIME IN SECONDS ✕ | 0 | 0 |
| DESIGNED WARNING TIME FOR TRAINS AT TIME TABLE SPEED | 25 SEC. | 25 SEC. |
| DOT TRAFFIC LIGHT ADVANCE PREEMPT TIME IN SECONDS ✕ | 0 | 0 |
| CONTROL EQUIPMENT DECISION TIME IN SECONDS | 5 | 5 |
| DESIGNED DETECTION TIME FOR TRAINS AT TIME TABLE SPEED | 30 SEC. | 30 SEC. |
| TIME TABLE MAXIMUM TRAIN SPEED IN MILES PER HOUR | 50 | 50 |
| BUFFER SPEED IN MILES PER HOUR | 5 | 5 |
| TOTAL WARNING SYSTEM DESIGN SPEED IN MILES PER HOUR | 55 | 55 |
| APPROACH DISTANCE TO ISLAND EDGE IN FEET | 2384 | 2384 |
| HALF WIDTH OF ISLAND IN FEET | 61 | 61 |
| APPROXIMATE MILE POSTS FOR APPROACH CIRCUIT | 205.93 | 205.01 |

✕AUTHORIZING AGENCY. "NONE"
✕DATE OF REQUIREMENT. "NONE"
✕AMOUNT OF TIME (SEC.). "NONE"

NEW WORK EXCEPT
( ) = EXISTING

SAFETRAN systems

PROJECT #. IL2007011
DES/CHKD BY. DCK/SWS
DATE. 04-23-07

CSX TRANSPORTATION
RAIL TRANSPORT GROUP ENGINEERING
COMMUNICATIONS AND SIGNALS

EE WASHINGTON TO BLACK LANE
TR-54 (500 E) (152845M)
TRACK AND SIGNAL PLAN
SUMNER, IL M.P. BC-205.47

4K.S01
REV. 12-22-06

| DESIGNED | DIGITIZED | CHECKED | DATE |
|---|---|---|---|
| SAF/DCK | SAF/DCK | SAF/SWS | 04-23-07 |

| DESIGN DATE | REV. NO. | DRAWING | SHEET NO | FILE | SHEET |
|---|---|---|---|---|---|
| 04-23-07 | 1 | ----- | ----- | BC20547 | S01 |

## Minimum Program Steps Report

### Location and SIN

DOT Number: 152845M
Milepost Number: BC-205.47
Site Name: TR 54

SIN: 712543202416 *

* Parameter is part of office check number calculation.

### MCF and Template Selection

MCF Name: GCP-T6X-01-2.mcf
MCF Revision: 012
MCFCRC: 0DFE7A0C

Template = 1A.6 Trk Bi *

* Parameter is part of office check number calculation.

## Minimum Program Steps

TEMPLATE: track 1-Bi, Island
Track 1 : GCP Frequency = 348 Hz
Track 1 : Approach Distance = 2384 ft See Plans
Track 1 : Prime Warning Time = 25 sec *
Track 1 : GCP Transmit Level = High Set in Field
Track 1 : Isl Frequency = 4.9 kHz

TEMPLATE: SSCC
SSCC-1 Number of GDs = 1 *
SSCC-2 Number of GPs = 1 *
SSCC-2 Number of GDs = 1 *

TEMPLATE: IP assignment SSCC
IN 7.2 = Not Used *
IN 8.2 = Out Of Service IP 1 *
IN 8.4 = GD 2.1 *
IN 8.5 = GP 2.1 *

TEMPLATE: SEAR
SP 3.1 = Not Used *

GCP: track 1
Track 1 : Island Distance = 122 ft *

ADVANCED: out of service
OOS Control = Display+OOS IPs *

ADVANCED: site options
Daylight Savings = On *

SSCC: 1
SSCC-1 Gate Delay = 5 sec *
SSCC 1 : Flash Rate = 55 *
SSCC 1 : Lamp Neutral Test = Off *

SSCC: 2
SSCC-2 Gate Delay = 5 sec *
SSCC 2 : Flash Rate = 55 *
SSCC 2 : Lamp Neutral Test = Off *

SEAR
DI 1 = Gnd Flt Tester 1 *
DI 2 = Gnd Flt Tester 2 *
Rly 1 = Ground Fault Test *
Rly 2 = AC Control *

SEAR: slot 7-8 inputs
IN 7.1 = TSS 1 *
IN 8.1 = TSS 2 *
IN 8.3 = POK 2 *

* Parameter is part of office check number calculation.

### Office Configuration Check Number

Check Number: 6024E6F7
(Based on MCF Revision 012)

Parameters not part of office check number calculation:

Track 1 : GCP Frequency = 348 Hz
Track 1 : Approach Distance = 2384 ft See Plans
Track 1 : GCP Transmit Level = High Set in Field
Track 1 : Isl Frequency = 4.9 kHz

NEW WORK

SAFETRAN systems

PROJECT #: IL2007011
DES/CHKD BY: DCK/SWS
DATE: 04-23-07

CSX TRANSPORTATION
RAIL TRANSPORT GROUP ENGINEERING
COMMUNICATIONS AND SIGNALS

EE WASHINGTON TO BLACK LANE
TR-54 (500 E) (152845M)
MINIMUM PROGRAM STEPS REPORT CWE-47
SUMNER, IL M.P. BC-205.47

4K.P01
REV. 12-21-06

| DESIGNED | DIGITIZED | CHECKED | DATE |
|---|---|---|---|
| SAF/DCK | SAF/DCK | SAF/SWS | 04-23-07 |

| DESIGN DATE | REV. NO. | DRAWING | SHEET NO | FILE | SHEET |
|---|---|---|---|---|---|
| 04-23-07 | 1 | ----- | ----- | BC20547 | P01 |

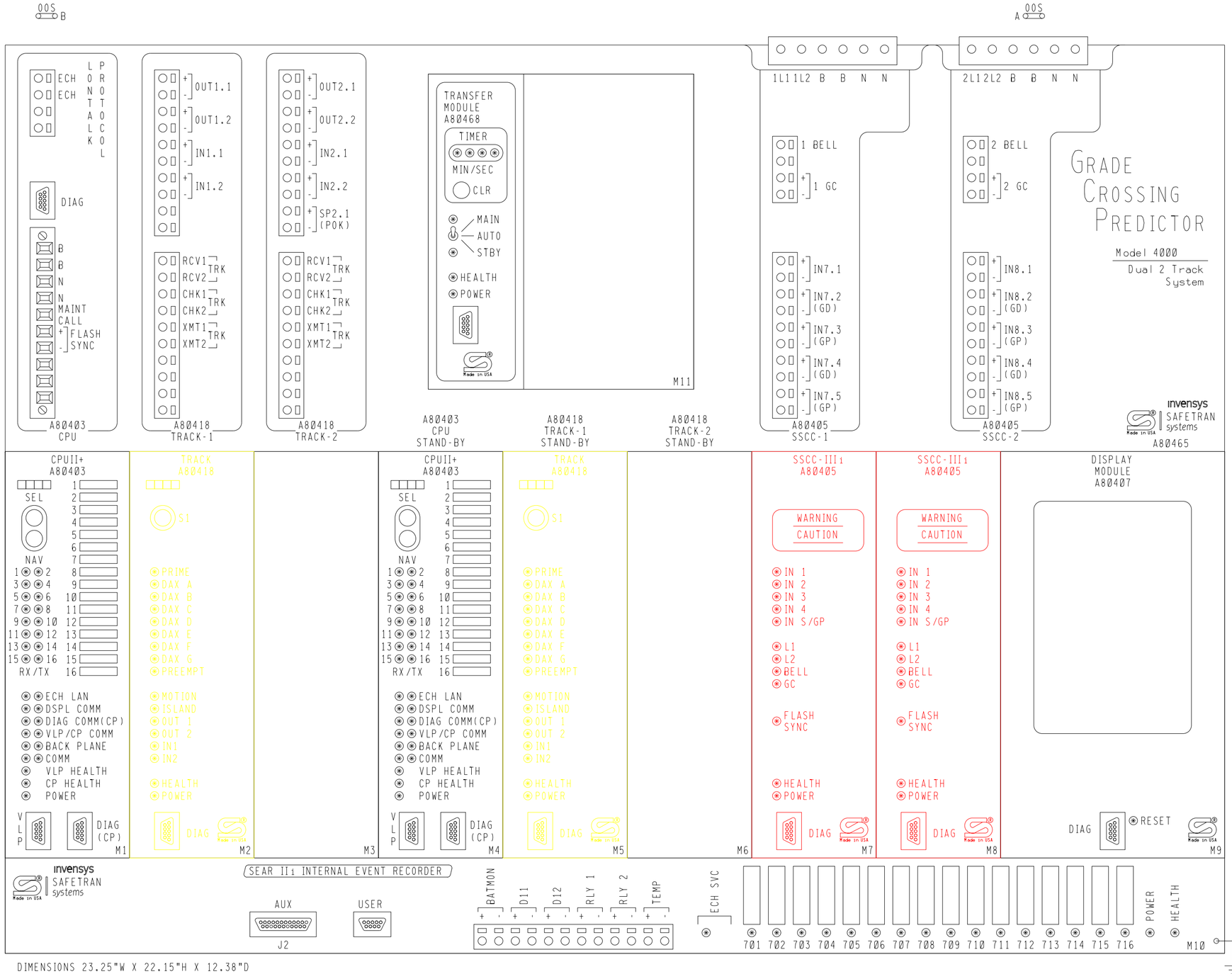


DIMENSIONS 23.25"W X 22.15"H X 12.38"D

GCP 4000 APPLICATION NOTES.

1. THE GRADE CROSSING PREDICTOR (GCP) IS A MODULAR MICROPROCESSOR CONTROLLED SYSTEM THAT IS DEPLOYED TO CONTINUALLY MONITOR THE APPROACHES TO RAILROAD GRADE CROSSINGS AND TO CONTROL THE LAMPS, GATES AND BELLS ASSOCIATED WITH THOSE CROSSINGS. WHEN EQUIPPED WITH THE SEAR II1 MODULE THE GCP 4000 WILL RECORD EVENTS AND REPORT ALARMS WHEN CONNECTED TO AN OFFICE SYSTEM.

2. THE GCP 4000 GCP (A80465) IS A TWO TRACK REDUNDANT UNIT CAPABLE OF DRIVING 4 INDEPENDENT FLASHER AND GATE SIGNALS AND RECORDING EVENTS AND REPORTING ALARMS. THE STANDARD A80465 INCLUDES THE FOLLOWING MODULES.

| SLOT | MODULE | FUNCTION | PART NO. |
|---|---|---|---|
| M1 | CPU-II+ | MAIN | A80403 |
| M2 | TRACK-1 | MAIN | A80418 |
| M3 | PANEL | NONE | D39325 |
| M4 | CPU-II+ | STANDBY | A80403 |
| M5 | TRACK-1 | STANDBY | A80418 |
| M6 | PANEL | NONE | D39325 |
| M7 | SSCC-III1 | A SIGNAL | A80405 |
| M8 | SSCC-III1 | B SIGNAL | A80405 |
| M9 | DISPLAY MODULE | | A80407 |
| TOP CENTER | TRANSFER UNIT | | A80468 |
| LOWER BAY | SEAR II1 | RECORDER | A80410 |
| OPTIONAL MODULES. | | | A80413 |
| RIO MODULE | | | |

3. EACH TRACK MODULE HAS TWO PROGRAMMABLE INPUTS AND TWO PROGRAMMABLE OUTPUTS.

4. THE SEAR II1 INTERNAL EVENT RECORDER HAS INPUTS FOR ONE BATTERY MONITOR, TWO NON-VITAL INPUTS AND TWO PROGRAMMABLE RELAY DRIVES (HEEL/FRONT).

5. LOCATED ON THE FRONT OF EACH MODULE THERE ARE LED LIGHTS TO INDICATE THE ACTIVITY OF CERTAIN FUNCTIONS OCCURRING INSIDE THE GCP.

6. BETWEEN SLOT 1 & 2 THERE IS A CHASSIS INDENTIFICATION CHIP (CIC) SOCKET AND AN ECD CONNECTOR (DB-25 FEMALE).

7. UPON THE FAILURE OF A MODULE IN SLOTS M1-M3 THE AUTOMATIC TRANSFER UNIT SWITCHES TO THE STANDBY MODULES IN SLOTS M4-M6.

NEW WORK

SAFETRAN systems

PROJECT #. IL2007011
DES/CHKD BY. DCK/SWS
DATE. 04-23-07

CSX TRANSPORTATION
RAIL TRANSPORT GROUP ENGINEERING
COMMUNICATIONS AND SIGNALS

EE WASHINGTON TO BLACK LANE
TR-54 (500 E) (152845M)
DETECTION DEVICE CONSIST CWE-47
SUMNER, IL M.P. BC-205.47

4K-CHASSIS.DGN
REV. 12-22-06

| DESIGNED | DIGITIZED | CHECKED | DATE |
|---|---|---|---|
| SAF/DCK | SAF/DCK | SAF/SWS | 04-23-07 |

| DESIGN DATE | REV. NO. | DRAWING | SHEET NO | FILE | SHEET |
|---|---|---|---|---|---|
| 04-23-07 | 1 | ----- | ----- | BC20547 | C01 |

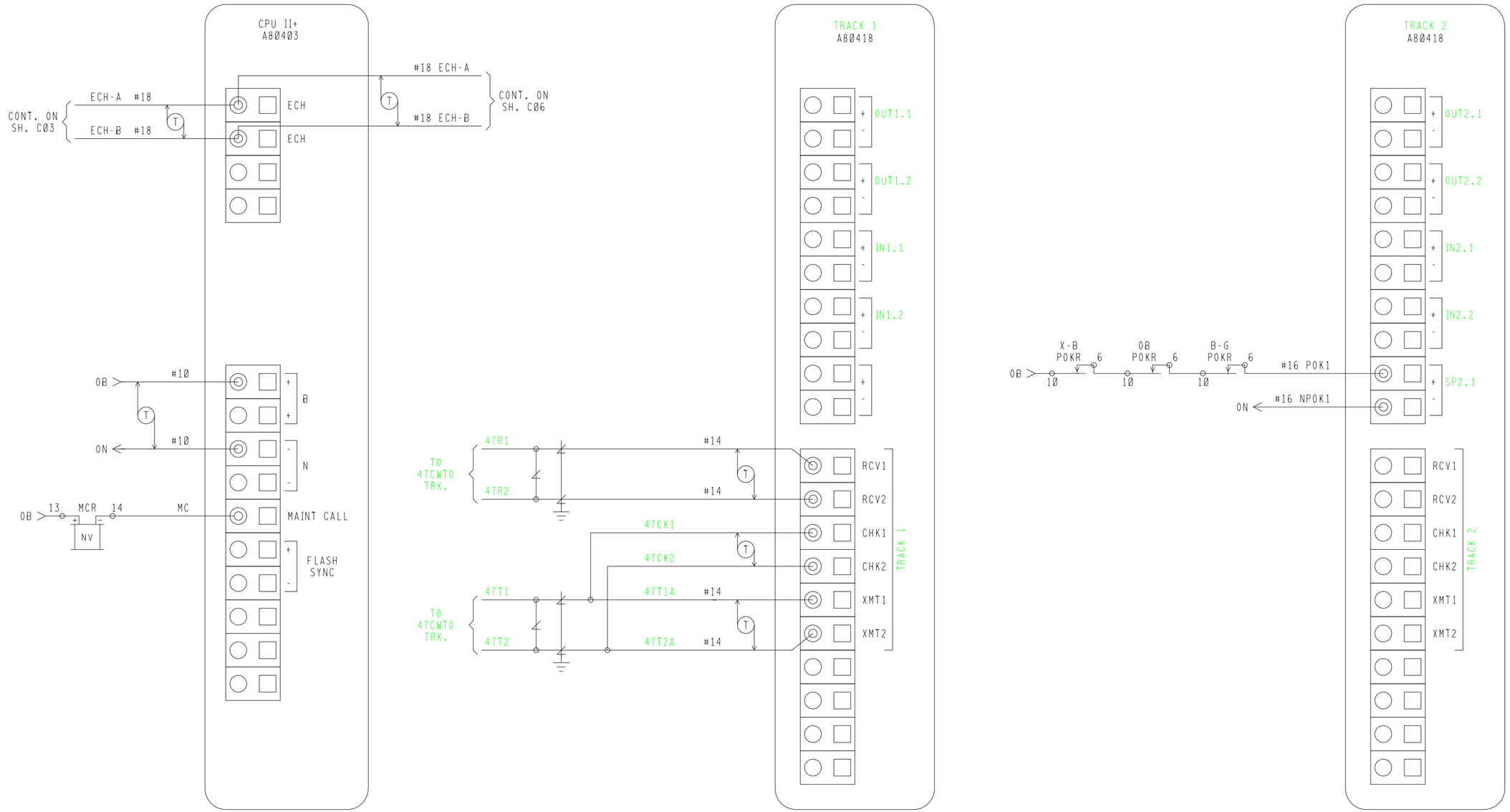


NOTE:

ECHELON CONNECTIONS NOT TO EXCEED 53' IN LENGTH AND TOTAL LENGTH COMBINED NOT TO EXCEED 430' WITH A MAXIMUM OF 8 NODES. RECOMMEND USE BELDEN WIRE CABLE #8461 OR EQUIVALENT.

NEW WORK

SAFETRAN systems

PROJECT #: IL2007011
DES/CHKD BY: DCK/SWS
DATE: 04-23-07

CSX TRANSPORTATION
RAIL TRANSPORT GROUP ENGINEERING
COMMUNICATIONS AND SIGNALS

EE WASHINGTON TO BLACK LANE
TR-54 (500 E) (152845M)
DETECTION CIRCUITRY CWE-47
SUMNER, IL M.P. BC-205.47

4K-TERMINALS.DGN
REV. 12-22-06

| DESIGNED | DIGITIZED | CHECKED | DATE |
|---|---|---|---|
| SAF/DCK | SAF/DCK | SAF/SWS | 04-23-07 |

| DESIGN DATE | REV. NO. | DRAWING | SHEET NO | FILE | SHEET |
|---|---|---|---|---|---|
| 04-23-07 | 1 | ----- | ----- | BC20547 | C02 |

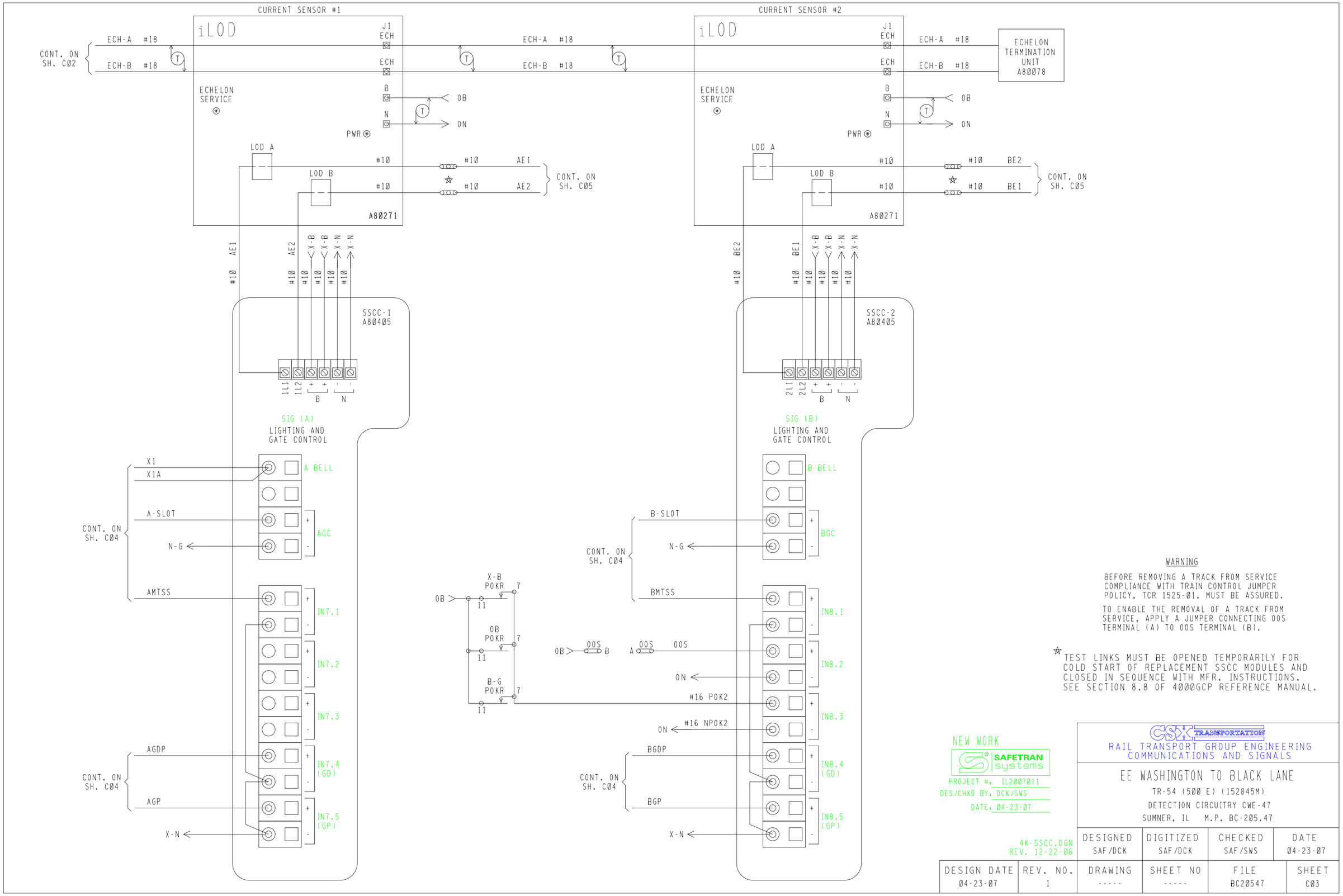


WARNING

BEFORE REMOVING A TRACK FROM SERVICE COMPLIANCE WITH TRAIN CONTROL JUMPER POLICY, TCR 1525-01, MUST BE ASSURED.

TO ENABLE THE REMOVAL OF A TRACK FROM SERVICE, APPLY A JUMPER CONNECTING 00S TERMINAL (A) TO 00S TERMINAL (B).

☆ TEST LINKS MUST BE OPENED TEMPORARILY FOR COLD START OF REPLACEMENT SSCC MODULES AND CLOSED IN SEQUENCE WITH MFR. INSTRUCTIONS. SEE SECTION 8.8 OF 4000GCP REFERENCE MANUAL.

NEW WORK

SAFETRAN systems

PROJECT #, IL2007011
DES/CHKD BY, DCK/SWS
DATE, 04-23-07

CSX TRANSPORTATION
RAIL TRANSPORT GROUP ENGINEERING
COMMUNICATIONS AND SIGNALS

EE WASHINGTON TO BLACK LANE
TR-54 (500 E) (152845M)
DETECTION CIRCUITRY CWE-47
SUMNER, IL M.P. BC-205.47

4K-SSCC.DGN
REV. 12-22-06

| DESIGNED | DIGITIZED | CHECKED | DATE |
|---|---|---|---|
| SAF/DCK | SAF/DCK | SAF/SWS | 04-23-07 |

| DESIGN DATE | REV. NO. | DRAWING | SHEET NO | FILE | SHEET |
|---|---|---|---|---|---|
| 04-23-07 | 1 | ----- | ----- | BC20547 | C03 |

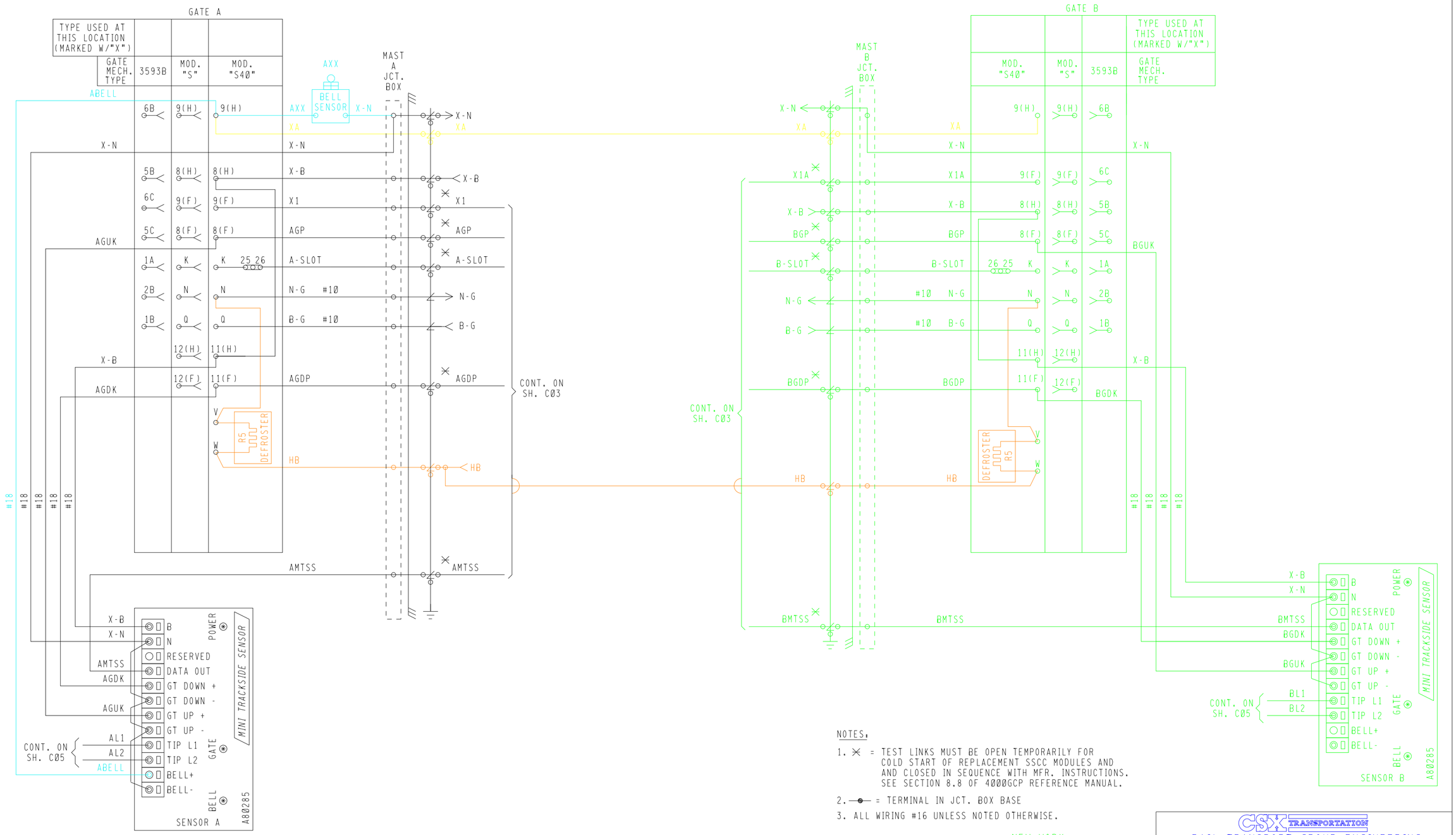


NOTES:

1. ✕ = TEST LINKS MUST BE OPEN TEMPORARILY FOR COLD START OF REPLACEMENT SSCC MODULES AND AND CLOSED IN SEQUENCE WITH MFR. INSTRUCTIONS. SEE SECTION 8.8 OF 4000GCP REFERENCE MANUAL.
2. —●— = TERMINAL IN JCT. BOX BASE
3. ALL WIRING #16 UNLESS NOTED OTHERWISE.

NEW WORK

SAFETRAN systems

PROJECT #: IL2007011
DES/CHKD BY: DCK/SWS
DATE: 04-23-07

CSX TRANSPORTATION

RAIL TRANSPORT GROUP ENGINEERING
COMMUNICATIONS AND SIGNALS

EE WASHINGTON TO BLACK LANE

TR-54 (500 E) (152845M)

CROSSING WARNING DEVICE GATE CIRCUITRY

SUMNER, IL M.P. BC-205.47

4K-GMECHS.DGN
REV. 12-22-06

| DESIGNED | DIGITIZED | CHECKED | DATE |
|---|---|---|---|
| SAF/DCK | SAF/DCK | SAF/SWS | 04-23-07 |

| DESIGN DATE | REV. NO. | DRAWING | SHEET NO | FILE | SHEET |
|---|---|---|---|---|---|
| 04-23-07 | 1 | ----- | ----- | BC20547 | C04 |

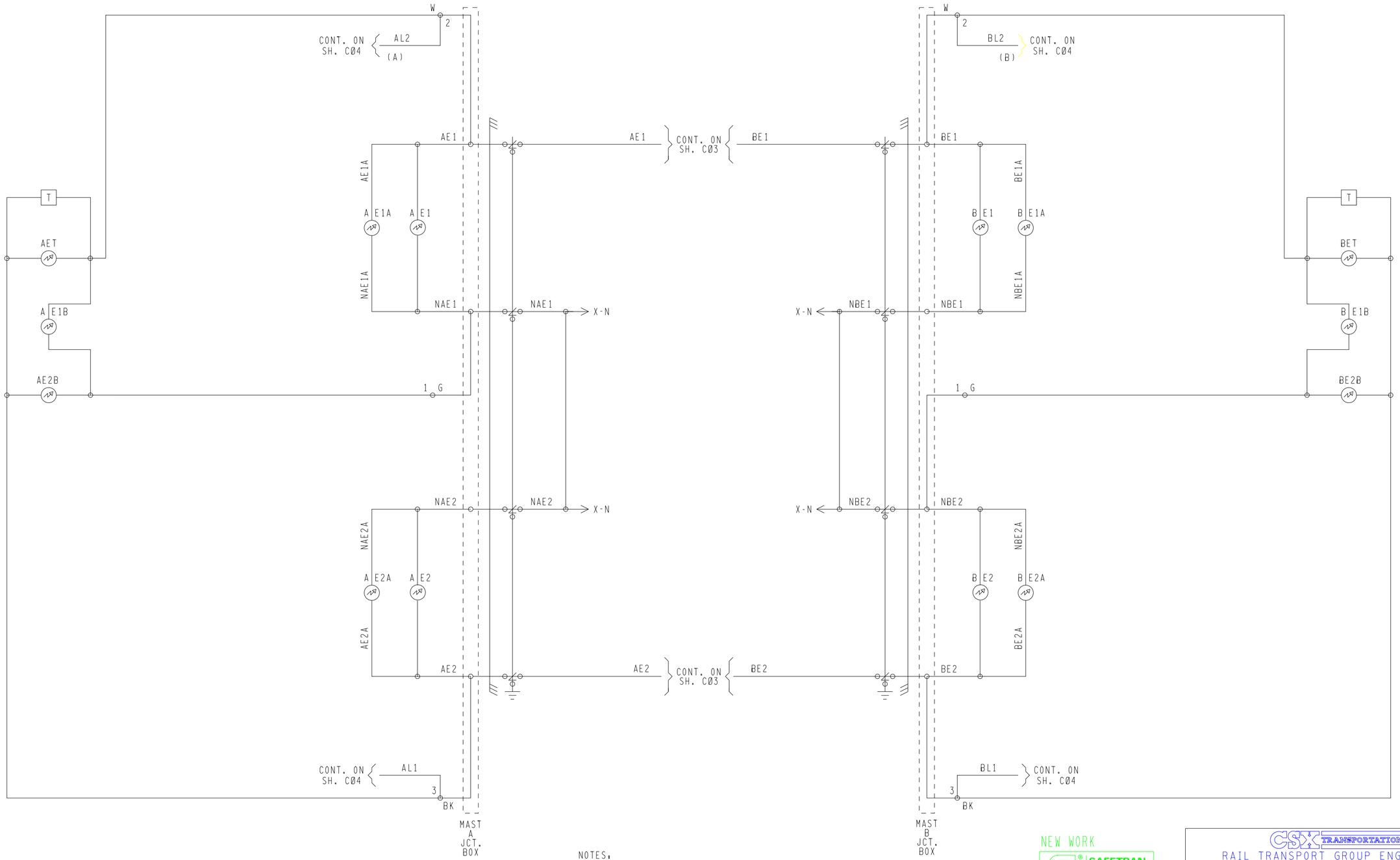


NOTES:

1. = TERMINAL IN JUNCTION BOX
2. WHEN 7 OR MORE LIGHTS ON A SINGLE STRUCTURE REFER TO SS382 FOR REQUIRED ARRESTERING
3. FEEDS TO ALL BUSSES AND LIGHT CIRCUITS ARE #10 FLEX
4. UNLESS NOTED ALL OTHER WIRING #16
5. CABLING SPECIFICATIONS SHOWN ON SH. S01
6. T = TIP SENSOR

NEW WORK

SAFETRAN systems

PROJECT #: IL2007011
DES/CHKD BY: DCK/SWS
DATE: 04-23-07

CSX TRANSPORTATION
RAIL TRANSPORT GROUP ENGINEERING
COMMUNICATIONS AND SIGNALS

EE WASHINGTON TO BLACK LANE
TR-54 (500 E) (152845M)
CROSSING WARNING DEVICE LIGHT CIRCUITRY
SUMNER, IL M.P. BC-205.47

4K-LAMP WIRING.DGN
REV. 08-28-06

| DESIGNED | DIGITIZED | CHECKED | DATE |
|---|---|---|---|
| SAF/DCK | SAF/DCK | SAF/SWS | 04-23-07 |

| DESIGN DATE | REV. NO. | DRAWING | SHEET NO | FILE | SHEET |
|---|---|---|---|---|---|
| 04-23-07 | 1 | ----- | ----- | BC20547 | C05 |

SEAR II₁ INTERNAL EVENT RECORDER I/O

| WAYSIDE ACCESS GATEWAY CONFIGURATION | |
|---|---|
| SITE ATCS ADDRESS | 7.125.432.024.07.01<br>7.125.LLL.GGG.SS.DD |
| SERIAL INTERFACE | 38,400,NONE,8,1/NOFLOW |
| SERIAL FORMAT | RAW |
| WAG TEST MODE | DISABLED |
| ECHELON ADDRESS | 01.07 |
| UDP PORTS | 5000, 5001, 5002, 5003 |
| ROUTE TABLE EXPIRY | 5400 SEC |
| BROADCAST MEDIUM | IP ETHERNET |
| TCP PORTS | 23, 10023, 6001, 6002 |
| DHCP SERVER | DISABLED |
| IP ADDRESS | 192.168.13.1 |
| TYPE 7 ROUTE LENGTH | 12--7RRLLLGGGSS |
| IP NETWORK MASK | 255.255.255.0 |
| WAG CIRCUIT ID | DISABLE |
| ROUTING REGION DOMAIN 1 | OCGSERVER1.JAX.COM |
| ATCS SERVER UDP PORT NUMBER | 6001 |
| TELNET NUMBERS | WAG 6002, SERIAL 10023 |
| DEFAULT GATEWAY IP | 192.168.013.031 |

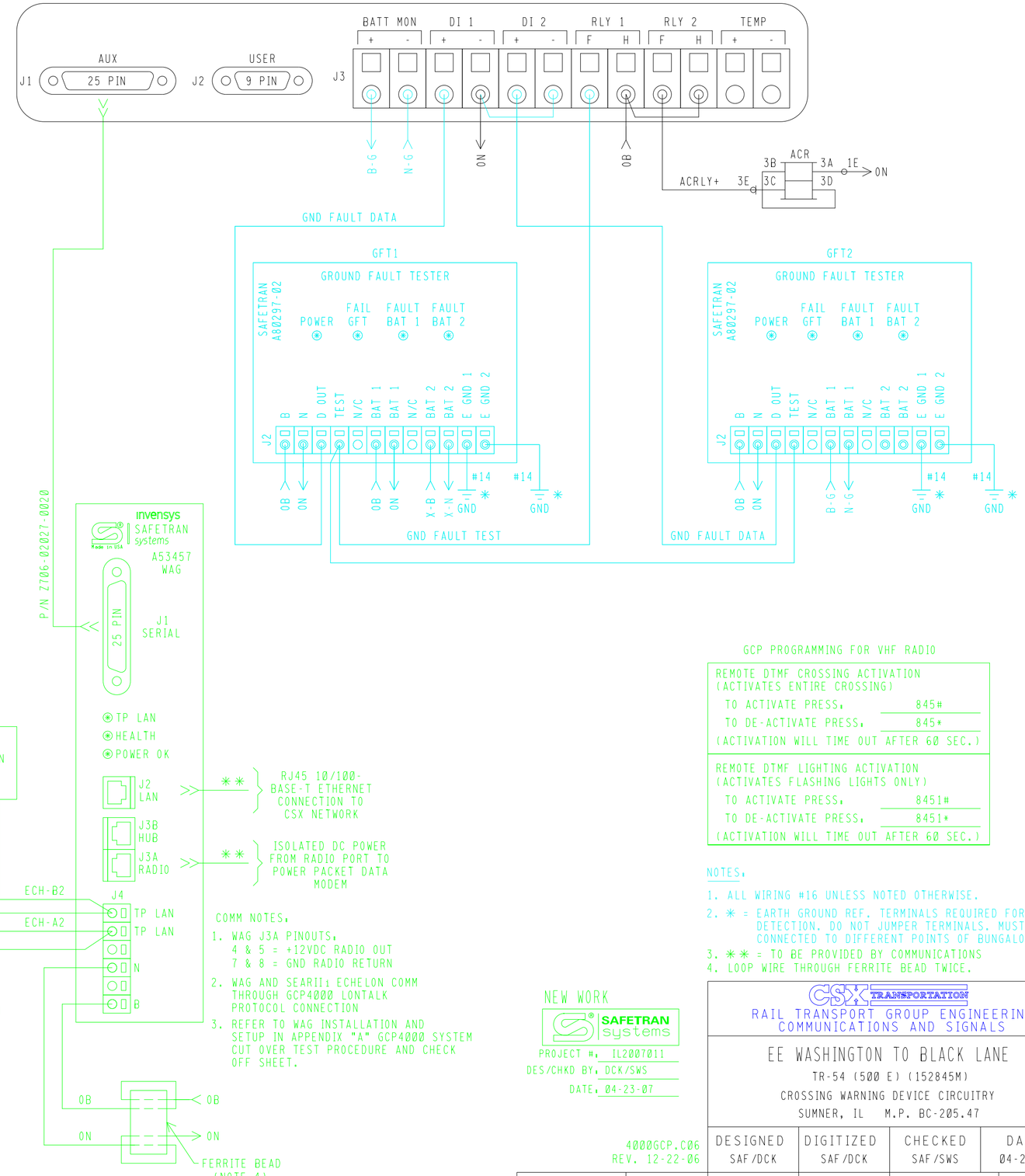


COMM NOTES:

1. WAG J3A PINOUTS:
   4 & 5 = +12VDC RADIO OUT
   7 & 8 = GND RADIO RETURN
2. WAG AND SEARII₁ ECHELON COMM THROUGH GCP4000 LONTALK PROTOCOL CONNECTION
3. REFER TO WAG INSTALLATION AND SETUP IN APPENDIX "A" GCP4000 SYSTEM CUT OVER TEST PROCEDURE AND CHECK OFF SHEET.

GCP PROGRAMMING FOR VHF RADIO

| | |
|---|---|
| REMOTE DTMF CROSSING ACTIVATION (ACTIVATES ENTIRE CROSSING) | |
| TO ACTIVATE PRESS: | 845# |
| TO DE-ACTIVATE PRESS: | 845* |
| (ACTIVATION WILL TIME OUT AFTER 60 SEC.) | |
| REMOTE DTMF LIGHTING ACTIVATION (ACTIVATES FLASHING LIGHTS ONLY) | |
| TO ACTIVATE PRESS: | 8451# |
| TO DE-ACTIVATE PRESS: | 8451* |
| (ACTIVATION WILL TIME OUT AFTER 60 SEC.) | |

NOTES:

1. ALL WIRING #16 UNLESS NOTED OTHERWISE.
2. ✳ = EARTH GROUND REF. TERMINALS REQUIRED FOR DETECTION. DO NOT JUMPER TERMINALS. MUST BE CONNECTED TO DIFFERENT POINTS OF BUNGALOW.
3. ✳✳ = TO BE PROVIDED BY COMMUNICATIONS
4. LOOP WIRE THROUGH FERRITE BEAD TWICE.

NEW WORK

SAFETRAN systems

PROJECT #: IL2007011
DES/CHKD BY: DCK/SWS
DATE: 04-23-07

CSX TRANSPORTATION
RAIL TRANSPORT GROUP ENGINEERING
COMMUNICATIONS AND SIGNALS

EE WASHINGTON TO BLACK LANE
TR-54 (500 E) (152845M)
CROSSING WARNING DEVICE CIRCUITRY
SUMNER, IL M.P. BC-205.47

4000GCP.C06
REV. 12-22-06

| DESIGNED | DIGITIZED | CHECKED | DATE |
|---|---|---|---|
| SAF/DCK | SAF/DCK | SAF/SWS | 04-23-07 |

| DESIGN DATE | REV. NO. | DRAWING | SHEET NO | FILE | SHEET |
|---|---|---|---|---|---|
| 04-23-07 | 1 | ----- | ----- | BC20547 | C06 |

| | DEFAULTS AND/OR STYLE | FIELD RECORD |
|---|---|---|
| SEAR II1 EXECUTIVE PROGRAM | VERSION: 9V725A01 | VERSION: _____ |
| APPLICATION PROGRAM (IF LOADED) | VERSION: 9V864A01 | VERSION: _____ |

NOTE TO INSPECTOR: AT IN SERVICE OF SEAR II1 OR UPDATE OF ITS INTERNAL EXECUTIVE PROGRAM OR ITS CSXT APPLICATION PROGRAM, THE VERSION NUMBER OF EACH PROGRAM MUST BE INSERTED IN THE BLANK FIELDS.

| SITE SET UP PROCEDURE | |
|---|---|
| FUNCTION | LED DISPLAY |
| DATE/TIME | XX-XX-XXXX XX:XX:XX |
| AUTOMACTIC DST ADJUSTMENT | YES |
| TIME ZONE | EASTERN |
| SITE NAME | TR 54 (500 E) |
| MILEPOST | BC-205.47 |
| DOT NUMBER | 152845M |
| TESTER TYPE | CROSSING |
| DATE FORMAT | MM-DD-YYYY |
| TEMP FORMAT | FAHRENHEIT |
| INDICATE HOLD (SEC) | 0 |
| SITE TYPE | COLLECTOR |
| SITE ATCS ADDRESS | 7.125.432.024.99.01 (7.RRR.LLL.GGG.99.01) |
| POLL ID | 1 |
| OFFICE ADDRESS | 2.125.00.0000 (2.RRR.NN.DDDD) |
| FIELD COMM. DEVICE | VHF COMM. (ECHELON) |
| MODE | GEN/ATCS |
| WAMS XID | ENABLED |
| OFFICE COMM. DEVICE | WAG (ECHELON) |
| USER PORT BAUD | 9600 |
| USER PORT DATA BITS | 8 |
| USER PORT PARITY | NONE |
| USER PORT STOP BITS | 1 |
| USER PORT FLOW CONTROL | NONE |
| AUX PORT BAUD | 38,400 |
| AUX PORT DATA BITS | 8 |
| AUX PORT PARITY | NONE |
| AUX PORT STOP BITS | 1 |
| AUX PORT FLOW CONTROL | NONE |
| COMM PORT BAUD | 9600 |
| COMM PORT DATA BITS | 8 |
| COMM PORT PARITY | NONE |
| COMM PORT STOP BITS | 1 |
| COMM PORT FLOW CONTROL | NONE |

INSPECTOR NOTE:
CURRENT VALUES MAY VARY DEPENDANT ON FIELD CONDITIONS, MARK UP PER ACTUAL READINGS FOR IN-SERVICE REVISION.

| LIT BULB COUNT ON EACH CIRCUIT | NO. | TYPE OF BULB | CURRENT READING IN AMP. AT APPROX. 10.0 V ARRAY VOLTAGE |
|---|---|---|---|
| CURRENT SENSOR (1) AE1, LAMP SET UP | 4 | ☐BULBS ☐LED | 4.0 |
| CURRENT SENSOR (1) AE2, LAMP SET UP | 4 | ☐BULBS ☐LED | 4.0 |
| CURRENT SENSOR (2) BE1, LAMP SET UP | 4 | ☐BULBS ☐LED | 4.0 |
| CURRENT SENSOR (2) BE2, LAMP SET UP | 4 | ☐BULBS ☐LED | 4.0 |

| VHF RADIO CHANNELS | | | |
|---|---|---|---|
| 1 | 161.130 | 5 | 161.550 |
| 2 | 160.710 | 6 | 160.785 |
| 3 | 160.560 | 7 | 160.785 |
| 4 | 160.860 | 8 | 160.785 |

NOTE 9

| MENU ⟶ CONFIGURATION | |
|---|---|
| MODULE TYPE | WAG |
| MODULE NAME | DEFAULT |
| WAG ECHELON NODE | 7 |

NOTE:
REFER TO WAG INSTALLATION AND SETUP IN APPENDIX "A" GCP4000 SYTEM CUT OVER, TEST PROCEDURE AND CHECK OFF SHEET.

| MEASURE BATTERY VOLTAGE AT INPUT | | |
|---|---|---|
| BATTERY VOLTAGE | 0B | _____ VOLTS |
| BATTERY VOLTAGE | X-B | _____ VOLTS |
| BATTERY VOLTAGE | B-G | _____ VOLTS |

| | CONTROL SYSTEM CONFIGURATION MENU QUESTIONS | |
|---|---|---|
| | OPTION | SELECTION |
| NOTE 1 - | RESET NAMES AND MODULES* | YES ☐ NO ☐ |
| | RAILROAD NUMBER | 125 |
| | ENTRANCE GATES* | 0 ☐ 1 ☐ 2 ☐ 3 ☐ 4 ☐ 5 ☐ 6 ☐ 7 ☐ 8 ☐ |
| NOTE 2 - | EXIT GATES* | 0 ☐ 1 ☐ 2 ☐ 3 ☐ 4 ☐ |
| | GATE POSITION FAIL* | 20 SECS. |
| | BATTERY BANKS* | 1 ☐ 2 ☐ 3 ☐ |
| | BATT MON USED* | NO ☐ YES ☐ |
| | INTERNAL CROSSING CONTROLLERS* | 0 ☐ 1 ☐ 2 ☐ |
| | EXTERNAL CROSSING CONTROLLERS* | 0 ☐ 1 ☐ 2 ☐ |
| | VHF COMMUNICATOR* | YES ☐ NO ☐ |
| NOTE 3 | ACTIVATION CODE | 845 |
| | ACTIVATION TIMEOUT | (60 SEC) |
| | 1LOD MODULES* | 0 ☐ 1 ☐ 2 ☐ 3 ☐ 4 ☐ |
| NOTE 4 - | ANY LED BULBS USED* | NO ☐ YES ☐ |
| | AUTO INSPECTIONS* | YES ☐ NO ☐ |
| | BELL SENSOR* | 0 ☐ 1 ☐ 2 ☐ 3 ☐ 4 ☐ |
| | BELL SENSOR TSS 1* | NO ☐ YES ☐ |
| | BELL SENSOR TSS 2* | NO ☐ YES ☐ |
| | BELL SENSOR TSS 3* | NO ☐ YES ☐ |
| | BELL SENSOR TSS 4* | NO ☐ YES ☐ |
| NOTE 5 | BELL SENSOR TSS 5* | NO ☐ YES ☐ |
| | BELL SENSOR TSS 6* | NO ☐ YES ☐ |
| | BELL SENSOR TSS 7* | NO ☐ YES ☐ |
| | BELL SENSOR TSS 8* | NO ☐ YES ☐ |
| | BELL ON* | GATES LOWERING ☐ GATES MOVING ☐ ALWAYS ☐ |
| | GFT'S | YES ☐ NO ☐ |
| | BATTERIES ON GFT1 | 1 ☐ 2 ☐ |
| NOTE 6 - | GATE TIP SENSORS* | YES ☐ NO ☐ |
| | RTU | NO ☐ YES ☐ |
| NOTE 7 | VHF VOICE CHANNEL | 1 ☐ 2 ☐ 3 ☐ 4 ☐ 5 ☐ 6 ☐ 7 ☐ 8 ☐ |
| | DATA CHANNEL | 1 ☐ 2 ☐ 3 ☐ 4 ☐ 5 ☐ 6 ☐ 7 ☐ 8 ☐ |
| | FULL APPROACH MOVE ALARMS* | ACTIVATED ☐ DO NOT ACTIVATE ☐ |

NOTE 8

| | | |
|---|---|---|
| EDIT DIGITAL INPUTS | ☐ NO | ☐ YES |
| EDIT BATTERIES | ☐ NO | ☐ YES |
| EDIT RELAYS | ☐ NO | ☐ YES |
| EDIT INDICATOR LEDS | ☐ NO | ☐ YES |
| EDIT TEST LED'S | ☐ NO | ☐ YES |
| EDIT ILOD SENSOR | ☐ NO | ☐ YES |
| EDIT VHF SETTINGS | ☐ NO | ☐ YES |

NOTES:

1. SELECT YES ON INITIAL SET-UP.
2. OPTION AVAILABLE IF GATES = YES
3. OPTION AVAILABLE IF VHF COMMUNICATOR = YES LAST 3 DIGITS OF DOT NUMBER.
4. OPTION AVAILABLE IF 1LODS.
5. OPTION AVAILABLE IF BELL SENSORS.
6. OPTION AVAILABLE IF GATES.
7. OPTION AVAILABLE IF VHF RADIO.
8. ONLY YES IN SPECIAL CIRCUMSTANCES.
9. SELECT "MENU" THEN "CONFIGURATION" FROM SEAR II INTERFACE KEYPAD TO ACCESS MODULE CONFIGURATION MENU.

NEW WORK

SAFETRAN systems

PROJECT #: IL2007011
DES/CHKD BY: DCK/SWS
DATE: 04-23-07

= NOTE

CSX TRANSPORTATION
RAIL TRANSPORT GROUP ENGINEERING
COMMUNICATIONS AND SIGNALS

EE WASHINGTON TO BLACK LANE
TR-54 (500 E) (152845M)
SEAR II1 CONFIGURATION & FUNCTIONS
SUMNER, IL M.P. BC-205.47

4000GCP.C07
REV. 10-26-06

| DESIGNED | DIGITIZED | CHECKED | DATE |
|---|---|---|---|
| SAF/DCK | SAF/DCK | SAF/SWS | 04-23-07 |

| DESIGN DATE | REV. NO. | DRAWING | SHEET NO | FILE | SHEET |
|---|---|---|---|---|---|
| 04-23-07 | 1 | ----- | ----- | BC20547 | C07 |