Completion of this form is necessary to accomplish the statutory purpose as outlined in the Illinois Public Utilities Act, chapter 111 2/3, Sec. 9. Failure to provide the requested information may prevent your request from being processed. This form has been approved by the Forms Management Center.

Form 3

(File original and two duplicates)

STATE OF ILLINOIS

ILLINOIS COMMERCE COMMISSION

RECEIVED
AUG 15 2007
Illinois Commerce Commission
RAIL SAFETY SECTION

Petition for permission to make a major change in crossing protection, or to install new protection under 92 Illinois Administration Code 1535.400 (d)

X-12621

T07-0066

289925M

Date: August 13, 2007

To the Illinois Commerce Commission:

The petitioner Chicago Central & Pacific Railroad shows

(1) That it is a railroad company operating a line of railroad in the State of Illinois.

(2) That petitioner proposes and hereby makes application for authority to make a major change in crossing protection, or to install new protection, under 92 Illinois Administrative Code 1535.400 (d) adopted by this Commission.

(3) That the location of the crossing, the nature of protection now established and proposed to be established, and other pertinent facts in connection therewith, are set forth in the statement attached to and forming part of this petition.

(4) That petitioner's reasons and purpose, with reference to its said proposal are in accordance with an Agreement from the Illinois Department of Transportation executed by the Railroad on January 17, 2007.

(5) That the facts set forth in this petition and in the statement and plans or plats attached thereto, are, all of them, true and correct to the best of petitioner's knowledge and belief.

WHEREFORE, the petitioner prays that the Commission will, if deemed desirable by the Commission, set the aforesaid matter for hearing, and that the Commission enter an order or adopt a resolution consenting to and granting authority for the making of the said proposed changes in or additions to crossing protection.

Chicago Central & Pacific Railroad

By Arne Skrodal
Arne Skrodal Signal Design Officer

(Attorney for Petitioner)

(Attorney's Address)

Statement, attached to and part of an application for permission to make a major change in crossing protection or to install new protection, under 92 Ill. Adm. Code 1535.400 (d).

1. Name of Railroad Company Chicago Central & Pacific Railroad

2. Crossing Number CCP-48.85-W DOT-289 925M

3. Village or City near Burlington (Plato Center)

4. Name of Street or Highway Illinois Route 47

5. Public Agency Maintaining Highway IDOT

6. Protection now established: (Give full description. Indicate the hours of any manual protection.)

   SE quadrant – One automatic flashing light signal,
   NW quadrant – One AFLS with bell, controlled by controlled by constant warning time circuitry.

7. Protection desired: (Give details)

   SE quadrant – One automatic flashing light signal with gate,
   NW quadrant – One AFLS with gate and bell, controlled by constant warning time circuitry.

8. Number of main tracks 1 Other tracks 0

9. Number of passenger train movements: 6 a.m. to 6 p.m. 0 6 p.m. to 6 a.m. 0

10. Number of freight train movements: 6 a.m. to 6 p.m. 4 6 p.m. to 6 a.m. 4

11. Approximate number of switch movements: 6 a.m. to 6 p.m. 0 6 p.m. to 6 a.m. 0

12. Maximum speed of trains at crossing on each track in each direction 50 MPH

13. Passenger platforms served by tracks within the limits of track circuits, if any None

14. Where automatic signals or gates are proposed, approximate number of train or engine movements daily which would cause false indications or operation None

15. Nature and approximate amount of street or highway traffic over crossing Vehicular, ADT- not available

16. In addition to the information listed hereinbefore in Form 3, attach a track plan or plat of the proposed crossing. This plan should show:

    (a) Width and surface of highway.
    (b) Highway intersections (including private driveways to be so indicated) and location of established highway signs or signals within 100 feet of crossing.
    (c) Location of tracks, switches and other railroad facilities such as block signals etc. within limits of track circuits, present and/or proposed.
    (d) Where automatic protection is proposed, show proposed location of signals (side lights, cantilevers, etc., if any).
    (e) Show the length of each operating track section within the control limits of the crossing protection and its function.

ADDITIONAL INFORMATION

Attached are Plans SD1015, SD1015X and SD1015C dated January 4, 2007

VERIFICATION

I, Arne Skrodal, first being duly sworn upon oath depose and say that I am Signal Design Officer of the Chicago Central & Pacific Railroad, a Delaware corporation; that I have read the above and foregoing petition by me subscribed and know the contents thereof; that said contents are true in substance and in fact, except as to those matters stated upon information and belief, and as to those, I believe same to be true.

Arne Skrodal

Arne Skrodal Signal Design Officer

Subscribed and sworn to before me this 13th day of August 2007.

Patricia A. Zieminski

Notary Public, Illinois.

NOTARY PUBLIC OFFICIAL SEAL STATE OF ILLINOIS
PATRICIA A. ZIEMINSKI
MY COMMISSION EXPIRES
SEPTEMBER 25, 2010

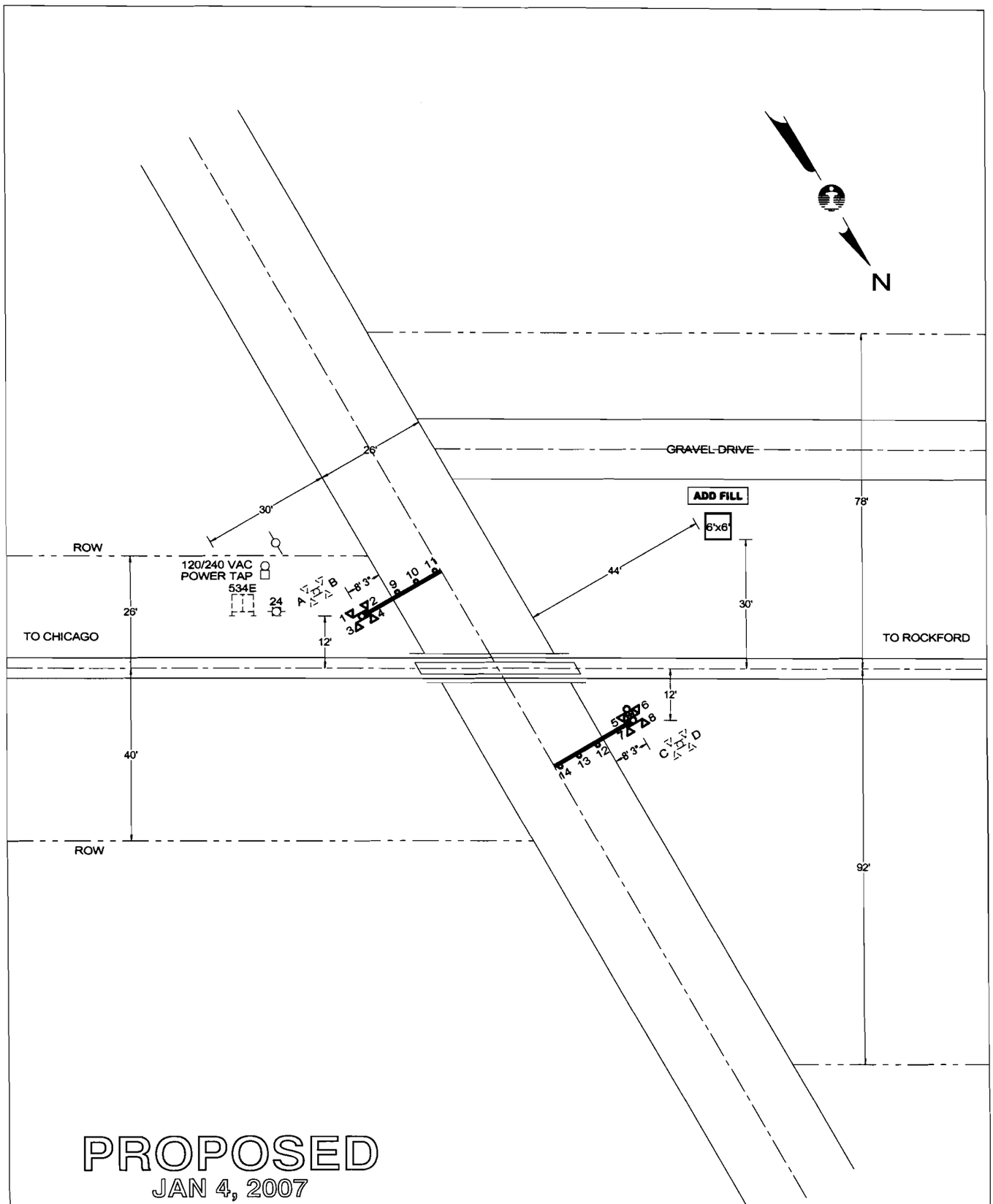

PROPOSED
JAN 4, 2007

PROPOSED SIGNAL WORK

- REMOVE EXISTING AFLS, CASE & BATTERY WELL
- INSTALL NEW LED AFLS W/ GATES & 6x6 HOUSE

RECEIVED
AUG 15 2007
Illinois Commerce Commission
RAIL SAFETY SECTION

QUADRANT	SE	NW
STANDARD AFLS	LED	LED
CANTILEVER, FT.	-	-
GATE, FT.	21	21
ADDED LIGHTS	-	-
BARRICADE	-	-
MULTI-TK SIGN	-	-
BELL	-	X
REVISIONS	2-2-05	

CN — SIGNALS & COMMUNICATIONS, ENGINEERING DEPARTMENT

CITY & STATE: PLATO CENTER, IL	SD 1015X
CROSSING: IL RTE 47	DATE: AUGUST 13, 2004
CCP - 48.85-W	DOT - 289 925M
MIDWEST DIVISION	FREEPORT SUBDIVISION
IN SERVICE: 12/15/1938	SCALE: 1"=30'
DRAWN BY: AVS	

E:\DWG\FRE\04885X.CAD

SD 1015 - MP 48 TO 49

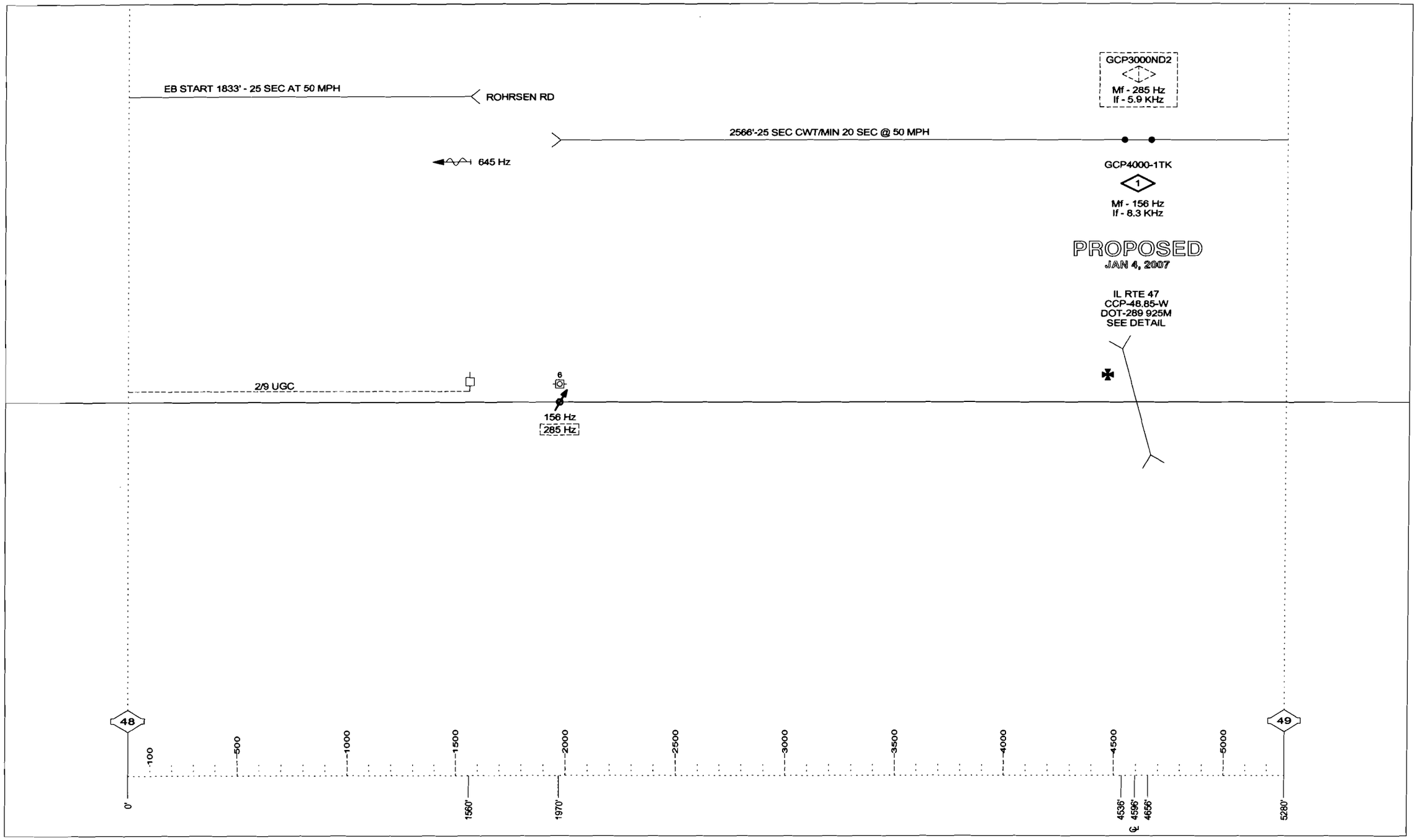

DRAWING SCALE 1" = 500'

2-2-05

SD 1015 - MP 49 TO 50

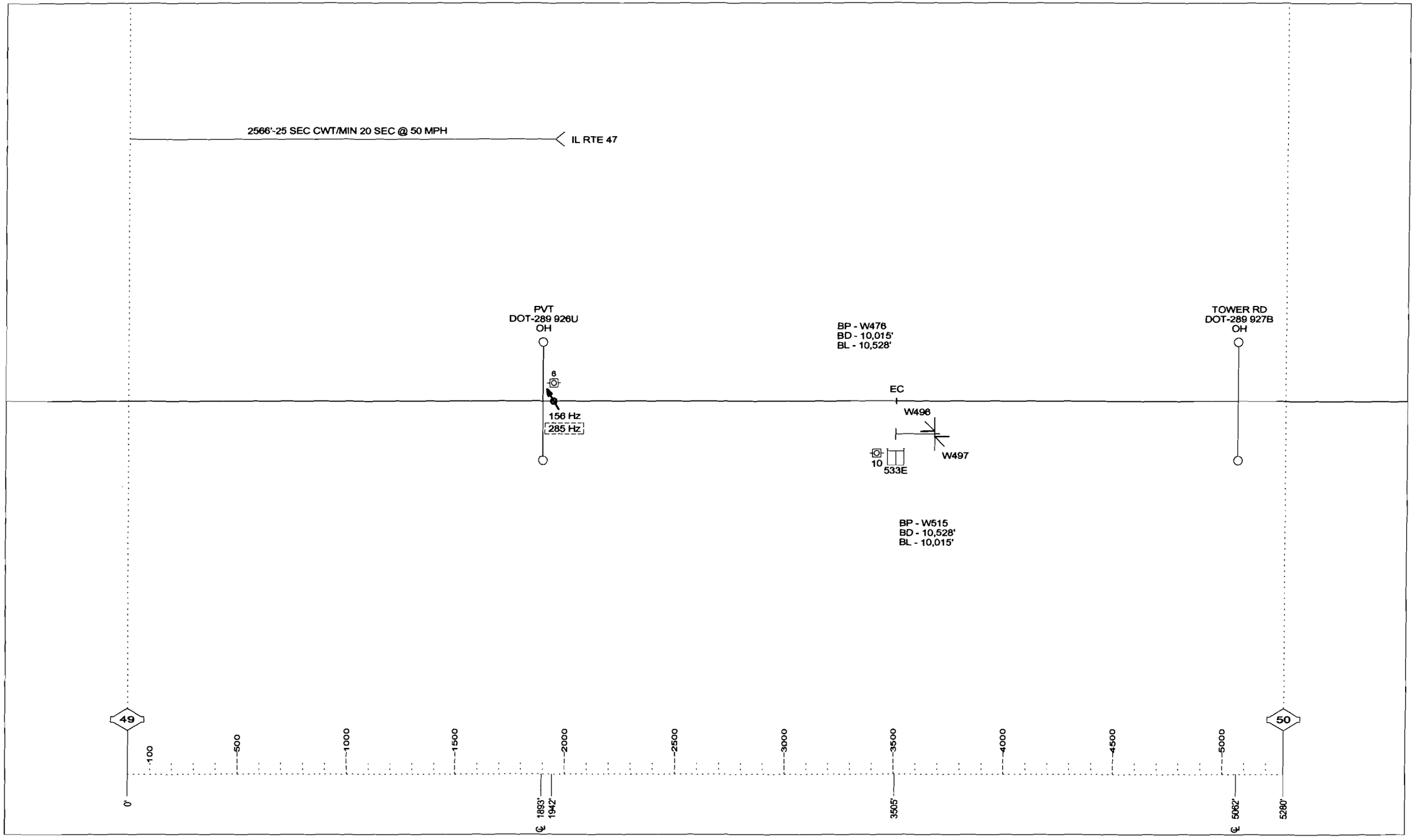

DRAWING SCALE 1" = 500'

2-2-05

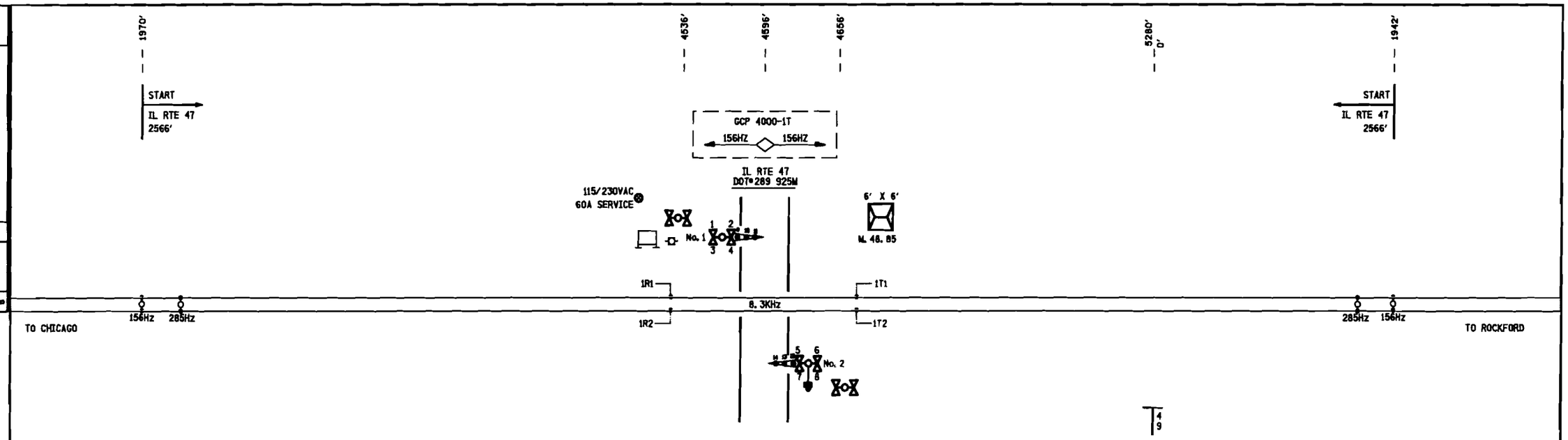

NOTES:

1) DENOTES MULTI-FREQ. NARROW BAND SHUNT 62775-8621.

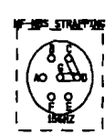

PROPOSED
DES. No. _____
RED-IN YELLOW-OUT
AS INSTALLED
DATE _____
BY _____

6' X 6' BUNGALOW

PROPOSED D	M	Y	REVISIONS	D	C	COMPLETED D	M	Y	C

DIVISION MIDWEST
SUB. FREEPORT
SD. 1015 C
MP. 48.23 TO 49.70

SIGNALS AND COMMUNICATIONS
EDMONTON, ALBERTA
30 APRIL 2007

DES. RLC
CH. PWW

TRACK LAYOUT
IL RTE 47
PLATO CENTER, IL

M 04823C01

14

SAFETRAN SYSTEM CORP.

REVISIONS

NO.	DATE	BY	DESCRIPTION	APP. BY
1				
2				
3				
4				
5				

SAFETRAN SYSTEMS CORPORATION

DES.: RLC	DATE: 04/28/07	JOB NO.: PICA10113
CKD.: PWW	ISSUE DATE: N/A	EST. NO.: N/A
DRN.: RLC	PLAN NO.: N/A	SHEET N/A OF N/A
P TIME: 10:27	P DATE: 08-AUG-2007	CAD ID.: 04823C01

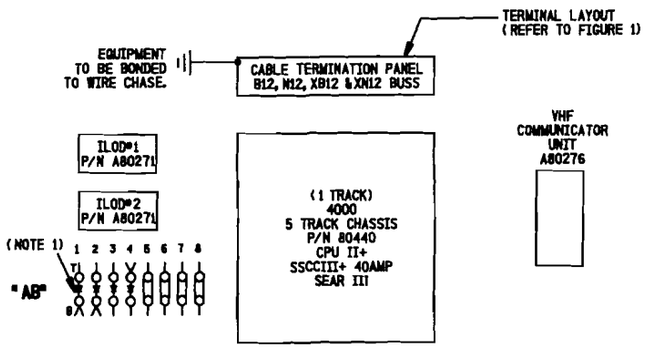

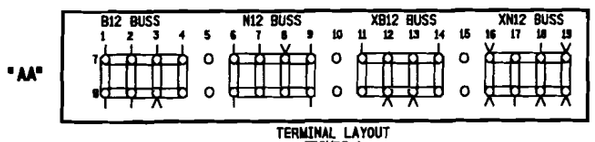

TERMINAL LAYOUT
FIGURE 1

NOTE:
1) -|◄|- DENOTES RECTIFIER : (SAFETRAN# 8008A299006)

SIDE "A"

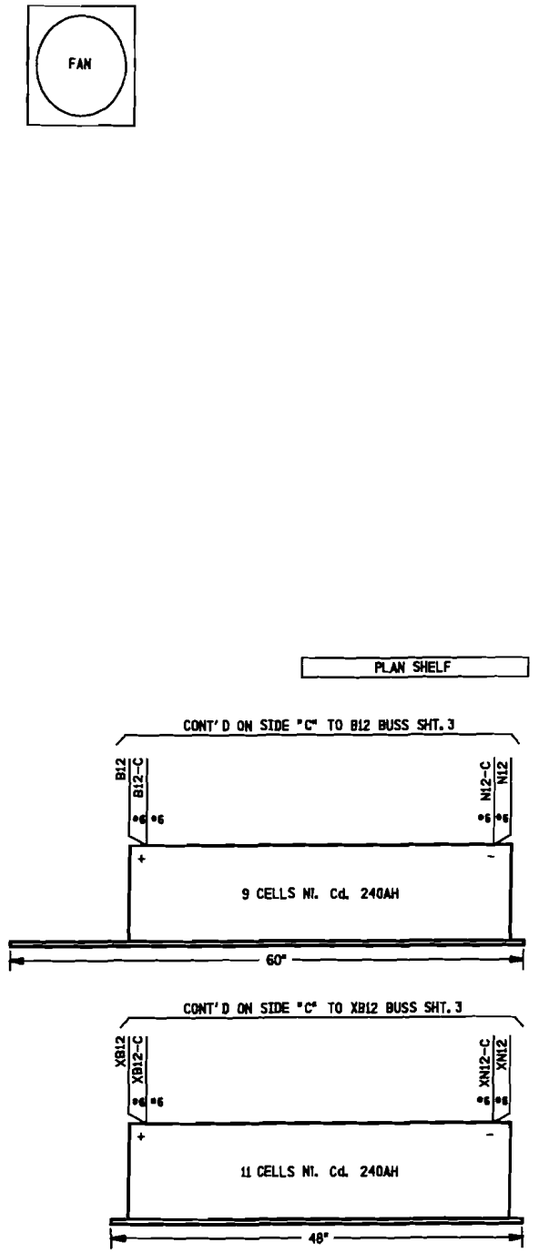

SIDE "B"

PROPOSED
DES. No. _____
RED-IN YELLOW-OUT
AS INSTALLED
DATE _____
BY _____

6' X 6' BUNGALOW

PROPOSED			REVISIONS	D	C	COMPLETED			C
D	M	Y				D	M	Y	

DIVISION MIDWEST
SUB. FREEPORT
SD. 1015 C
MP. 48.23 TO 49.70

SIGNALS AND COMMUNICATIONS
EDMONTON, ALBERTA
30 APRIL 2007

DES. RLC
CH. PWW

BUNGALOW LAYOUT
SIDE "A" & "B"
IL RTE 47

PLATO CENTER, IL

M 04823C02

SAFETRAN SYSTEM CORP.
LOUISVILLE DIVISION, LOUISVILLE, KY

REVISIONS

NO.	DATE	BY	DESCRIPTION	APP. BY
1				
2				
3				
4				
5				

SAFETRAN SYSTEMS CORPORATION

DES. : RLC	DATE: 04/30/07	JOB NO. : PICA10413
CKD. : PWW	ISSUE DATE: N/A	EST. NO. : N/A
DRN. : RLC	PLAN NO. : N/A	SHEET N/A OF N/A
P TIME: 10:27	P DATE: 08-AUG-2007	CAD ID. : 04823C02

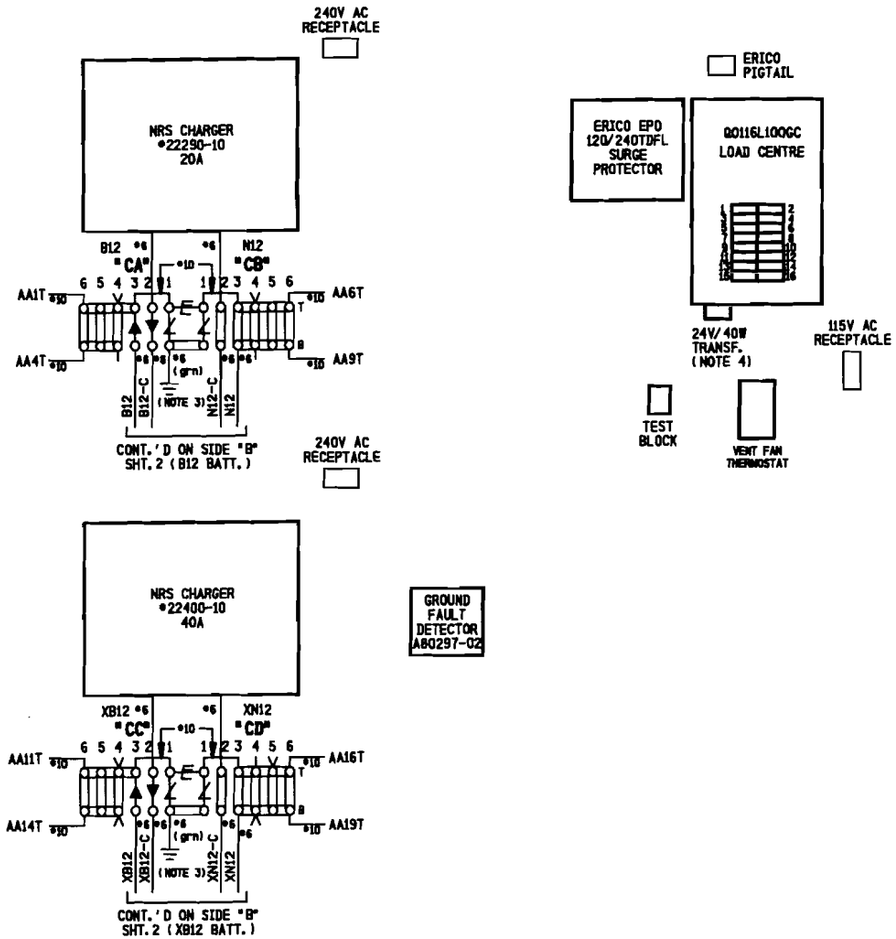

SIDE "C"

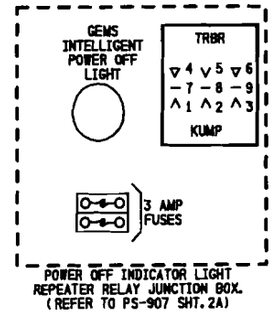

SIDE "D"
ABOVE ENTRY DOOR

NOTES:

1) ⋕ DENOTES EQUALIZER TYPE: (SAFETRAN #022700-1X)
2) ⊸ DENOTES LIGHTNING ARRESTER TYPE: (SAFETRAN #022585-1X)
3) SURGE PROTECTION SHOULD BE BONDED TO BUNGALOW.
4) 24V-40W TRANSFORMER (CN STOCK #02-45-367)

NO.	DATE	BY	DESCRIPTION	APP. BY
1				
2				
3				
4				
5				

SAFETRAN SYSTEMS CORPORATION

DES. : RLC	DATE: 04/30/07	JOB NO. : P12A10113	
CKD. : PWW	ISSUE DATE: N/A	SET. NO. : N/A	
DWN. : RLC	PLAN NO. : N/A	SHEET N/A OF N/A	
P TIME: 10:27	P DATE: 06-AUG-2007	CAD ID. : 04823C03	

PROPOSED
DES. No. _____
RED-IN YELLOW-OUT
AS INSTALLED
DATE _____
BY _____

6' X 6' BUNGALOW

PROPOSED D	M	Y	REVISIONS	D	C	COMPLETED D	M	Y	C

DIVISION MIDWEST
SUB. FREEPORT
SD. 1015 C
MP. 48.23 TO 49.70

SIGNALS AND COMMUNICATIONS EDMONTON, ALBERTA
DES. RLC
30 APRIL 2007
CH. PWW

BUNGALOW LAYOUT
SIDE "C" & OVER DOOR SIDE "D"
IL RTE 47

PLATO CENTER, IL

M 04823C03

SAFETRAN SYSTEM CORP.

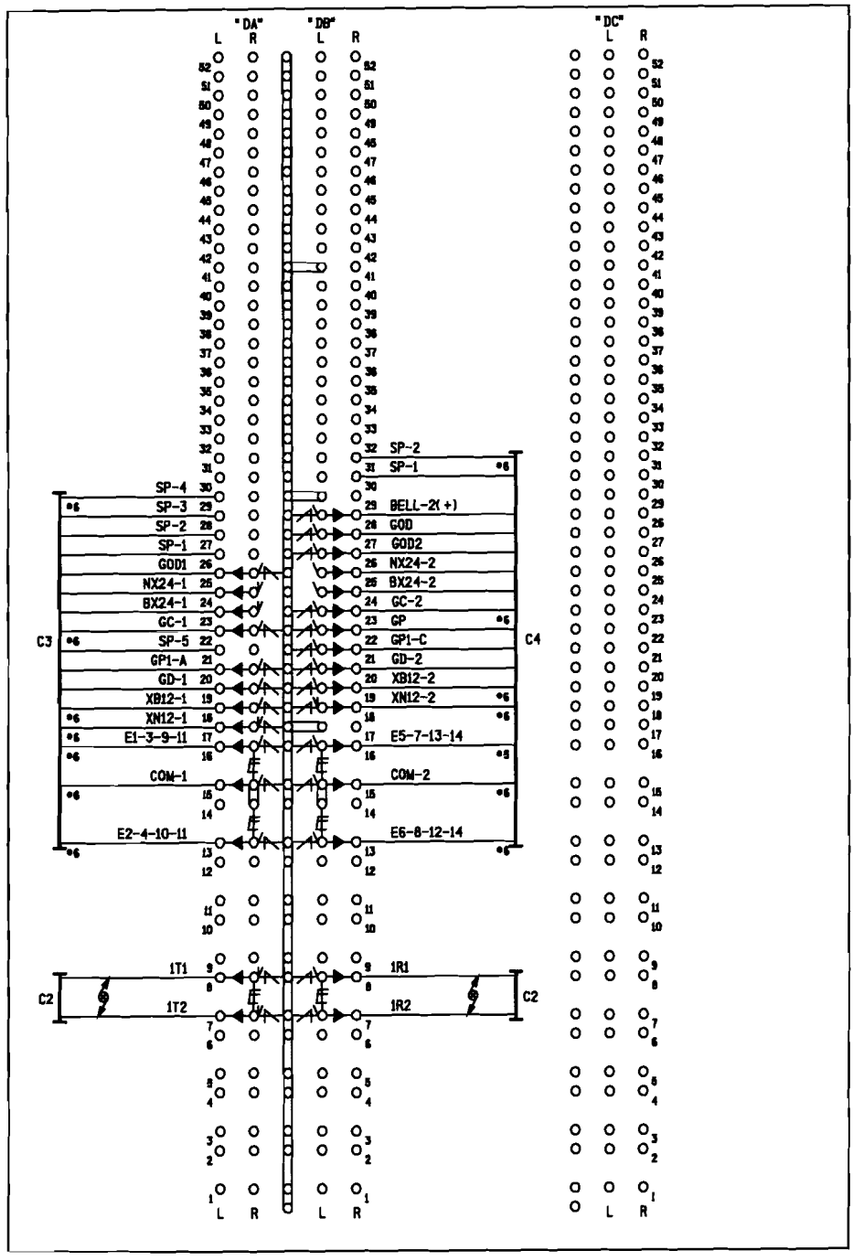

SIDE "D" (INSIDE)

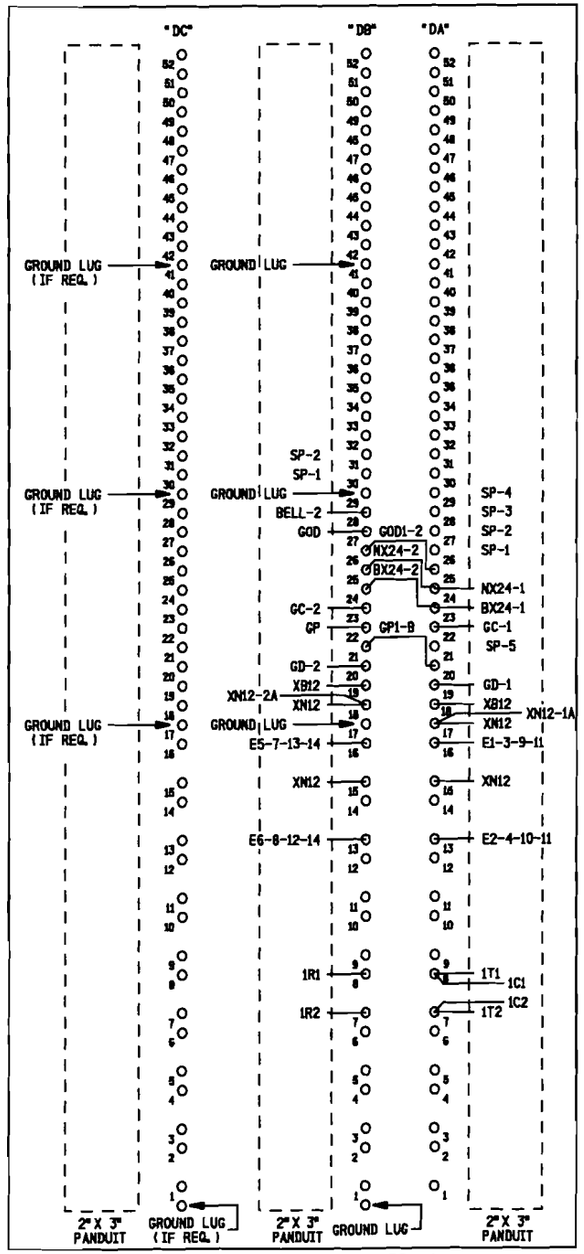

SIDE "D" (OUTSIDE)

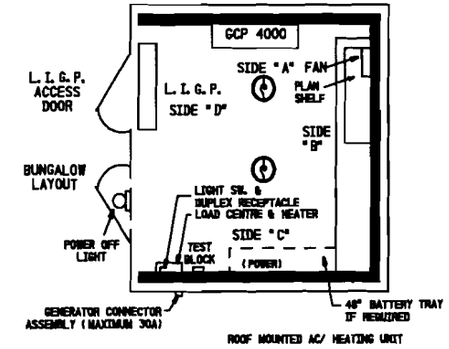

CABLE CONSIST:

C1-3C*6 TECK 90 U/G TO MAIN SERVICE
C2-(2)-2SC*6 TW. TO TRACK
C3-16C (7*6, 9*14) TO GATE (SIG.*1)
C4-16C (7*6, 9*14) TO GATE (SIG.*2)

NOTES:

1) DENOTES LIGHTNING ARRESTER TYPE:(SAFETRAN *022585-1X)
2) DENOTES EQUALIZER TYPE:(SAFETRAN *022700-1X)
3) DENOTES TWISTED PAIR.
4) ENSURE DOUBLE NUTTING OF ALL TERMINALS.

PROPOSED
DES. No. _____
RED-IN YELLOW-OUT
AS INSTALLED
DATE _____
BY _____

6' X 6' BUNGALOW

PROPOSED D	M	Y	REVISIONS	D	C	COMPLETED D	M	Y	C

DIVISION MIDWEST
SUB. FREEPORT
SD. 1015 C
MP. 48.23 TO 49.70

SIGNALS AND COMMUNICATIONS EDMONTON, ALBERTA — DES. RLC
30 APRIL 2007 — CH. PWW

BUNGALOW LAYOUT SIDE "D"
LOW IMPEDANCE GROUND PLANE
IL RTE 47

PLATO CENTER, IL

M 04823C04

SAFETRAN SYSTEM CORP.

NO.	DATE	BY	DESCRIPTION	APP. BY
1				
2				
3				
4				
5				

REVISIONS

SAFETRAN SYSTEMS CORPORATION

DES.: RLC	DATE: 04/30/07	JOB NO.: PTCA40013	
CKD.: PWW	ISSUE DATE: N/A	EST. NO. N/A	
DRN.: RLC	PLAN NO. N/A	SHEET N/A OF N/A	
P. TIME: 10:27	P. DATE: 06-JUN-2007	CAD ID.: 04823C04	

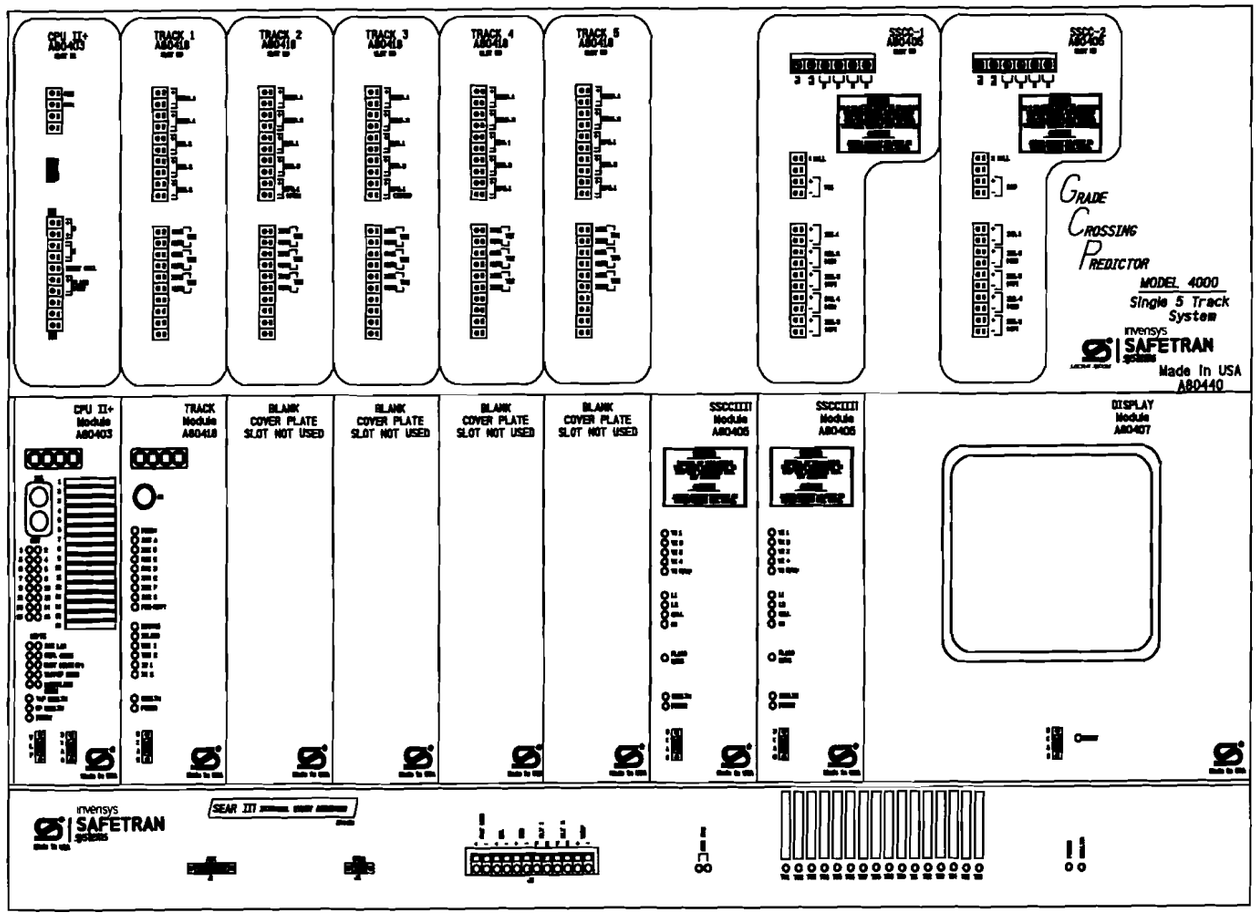

ATTENTION!

ENSURE THE DISPLAY MODULE HEATER IS DISABLED. LEAVING THE DISPLAY HEATER ENABLE WILL REDUCE THE AMOUNT OF BATTERY STANDBY TIME IN THE EVENT OF AN AC POWER FAILURE.

HEATER FUNCTION IS
JUMPER SELECTABLE ON
THE DISPLAY MODULE BOARD.
THREE OPTIONS ARE AVAILABLE.
NORMAL LCD HTR (DEFAULT)
HI CURRENT
NO JUMPER (HEATER DISABLED)

PROPOSED
DES. No. _____
RED-IN YELLOW-OUT
AS INSTALLED
DATE _____
BY _____

6' X 6' BUNGALOW

PROPOSED D	M	Y	REVISIONS	D	C	COMPLETED D	M	Y	C

DIVISION MIDWEST
SUB. FREEPORT
SD. 1015 C
MP. 48.23 TO 49.70

CN

SIGNALS AND COMMUNICATIONS
EDMONTON, ALBERTA
30 APRIL 2007

DES. RLC
CH. PWW

GCP 4000 NON REDUNDANT
5 TRK CHASSIS & MOD. LAYOUT
IL RTE 47

PLATO CENTER, IL

M 04823C05

SAFETRAN SYSTEM CORP.

REVISIONS

NO.	DATE	BY	DESCRIPTION	APP. BY
1				
2				
3				
4				
5				

SAFETRAN SYSTEMS CORPORATION

DES. : RLC	DATE: 04/30/07	JOB NO. : PICA10113
CKD. : PWW	ISSUE DATE: N/A	EST. NO. : N/A
DRN. : RLC	PLAN NO. : N/A	SHEET N/A OF N/A
P TIME: 10:27	P DATE: 08-AUG-2007	CAD ID. : 04823C05

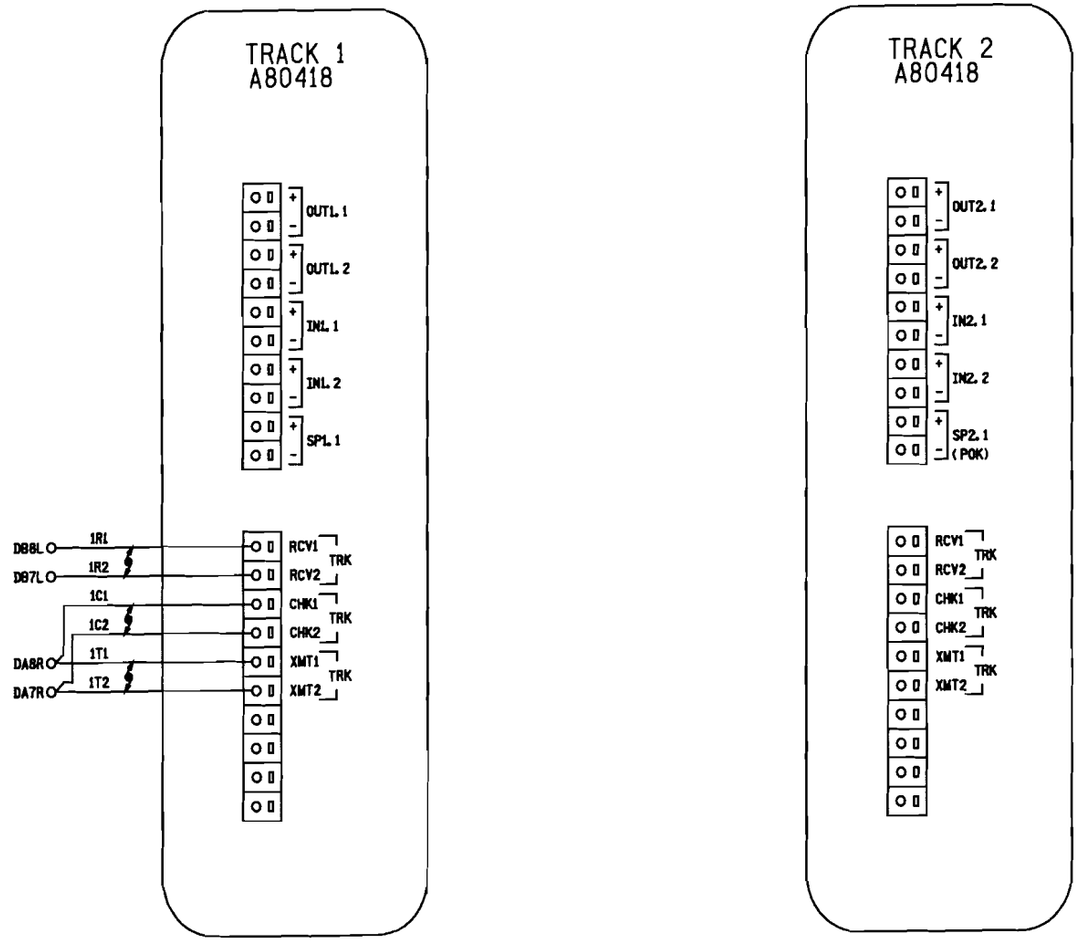

NOTES:

1) ALL WIRING #16 AWG MINIMUM UNLESS OTHERWISE NOTED. WIRE SIZES SHOWN ARE MINIMUM GAUGE.

2) DENOTES TWISTED PAIR.

PROPOSED
DES. No. _____
RED-IN YELLOW-OUT
AS INSTALLED
DATE _____
BY _____

6' X 6' BUNGALOW

PROPOSED D	M	Y	REVISIONS	D	C	COMPLETED D	M	Y	C

DIVISION MIDWEST
SUB. FREEPORT
SD. 1015 C
MP. 48.23 TO 49.70

SIGNALS AND COMMUNICATIONS
EDMONTON, ALBERTA

DES. RLC
CH. PWW

30 APRIL 2007

GCP 4000 NON REDUNDANT
TRACK CONNECTIONS
IL RTE 47

PLATO CENTER, IL

M 04823C06

SAFETRAN SYSTEM CORP.

NO.	DATE	BY	DESCRIPTION	APP. BY
1				
2				
3				
4				
5				

REVISIONS

SAFETRAN SYSTEMS CORPORATION

DES. : RLC
DATE: 04/30/07
JOB NO. : PICA10113
CKD. : PWW
ISSUE DATE: N/A
EST. NO. : N/A
DWN. : RLC
PLAN NO. : N/A
SHEET N/A OF N/A
P TIME: 10:27
P DATE: 08-AUG-2007
CAD ID. : 04823C06

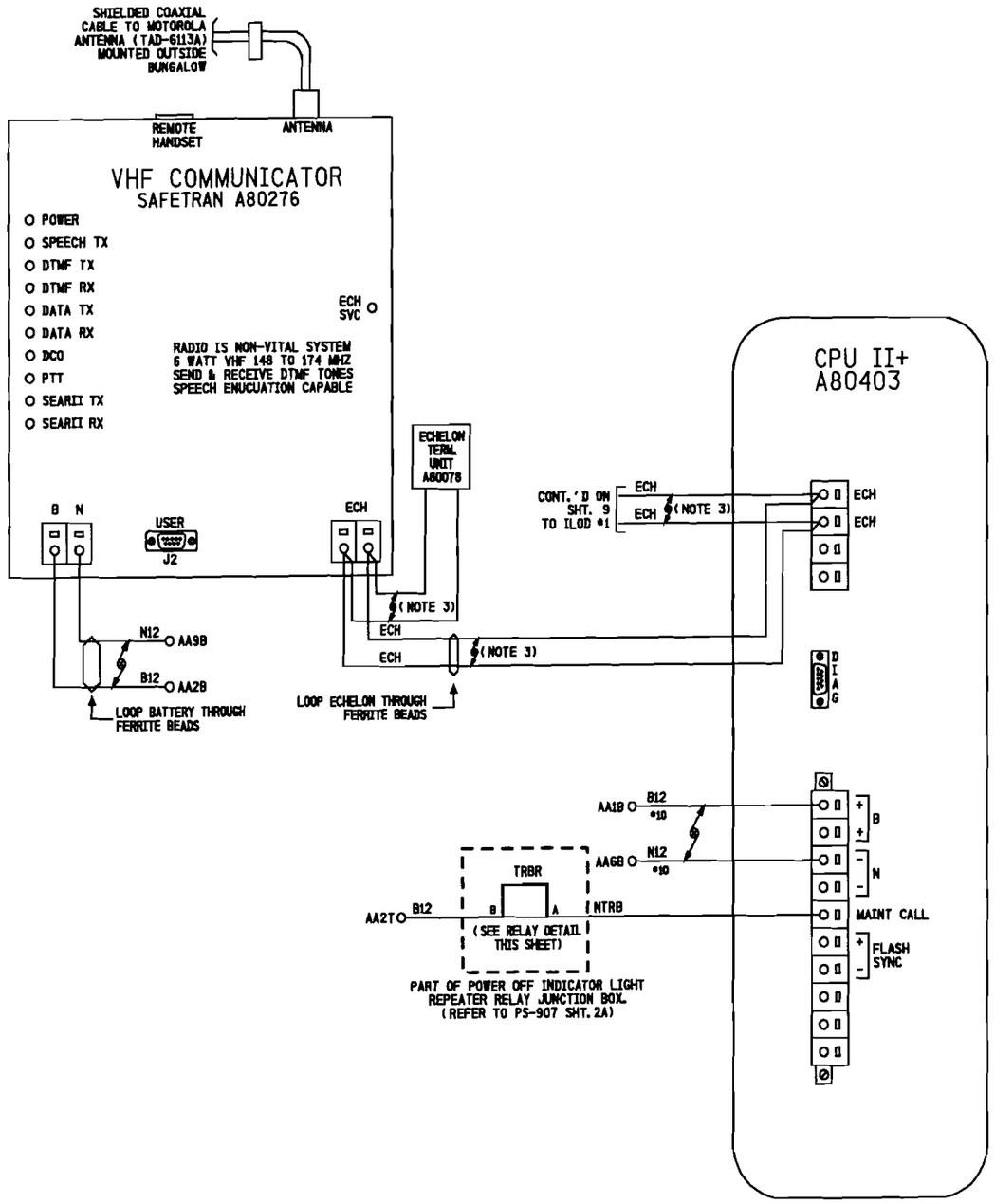

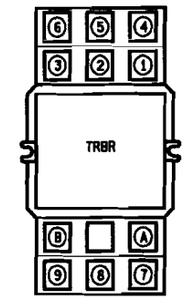

LOCATED OVER ENTRY DOOR

RELAY DETAIL

RELAY - POTTER & BRUMFIELD
MODEL KUMP-14D18-12 SOCKET MOUNTABLE
12 VDC W/ 3 FORM C CONTACTS.

SOCKET - SCREW TERMINAL
MODEL 27E121.

RELAY WIRING DIAGRAM (REAR VIEW)

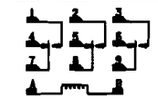

NOTE:
SOCKET NUMBERING CORRESPONDS DIRECTLY WITH RELAY NUMBERING.
(COIL SHOWN ENERGIZED)

NOTES:

1) ALL WIRING #16 AWG UNLESS OTHERWISE NOTED.
2) DENOTES TWISTED PAIR.
3) USE BELDEN CABLE, PART #8461-u500-60 FOR ALL ECHELON AND LAN WIRING.

PROPOSED
DES. No. _____
RED-IN YELLOW-OUT
AS INSTALLED
DATE _____
BY _____

6' X 6' BUNGALOW

PROPOSED D	M	Y	REVISIONS	D	C	COMPLETED D	M	Y	C

DIVISION MIDWEST
SUB. FREEPORT
SD. 1015 C
MP. 48.23 TO 49.70

SIGNALS AND COMMUNICATIONS
EDMONTON, ALBERTA
30 APRIL 2007

DES. RLC
CH. PWW

SAFETRAN INTERNAL EVENT ANALYZER
CPUII+ & VHF COMMUNICATOR
IL RTE 47
PLATO CENTER, IL

M 04823C07

SAFETRAN SYSTEM CORP.

SAFETRAN SYSTEMS CORPORATION

DES.: RLC	DATE: 04/30/07	JOB NO.: PICA10113
CKD.: PWW	ISSUE DATE: N/A	EST. NO.:
DWN.: RLC	PLAN NO.: N/A	SHEET N/A OF N/A
P TIME: 10:27	P DATE: 08-AUG-2007	CAD ID.: 04823C07

NO.	DATE	BY	DESCRIPTION	APP. BY
1				
2				
3				
4				
5				

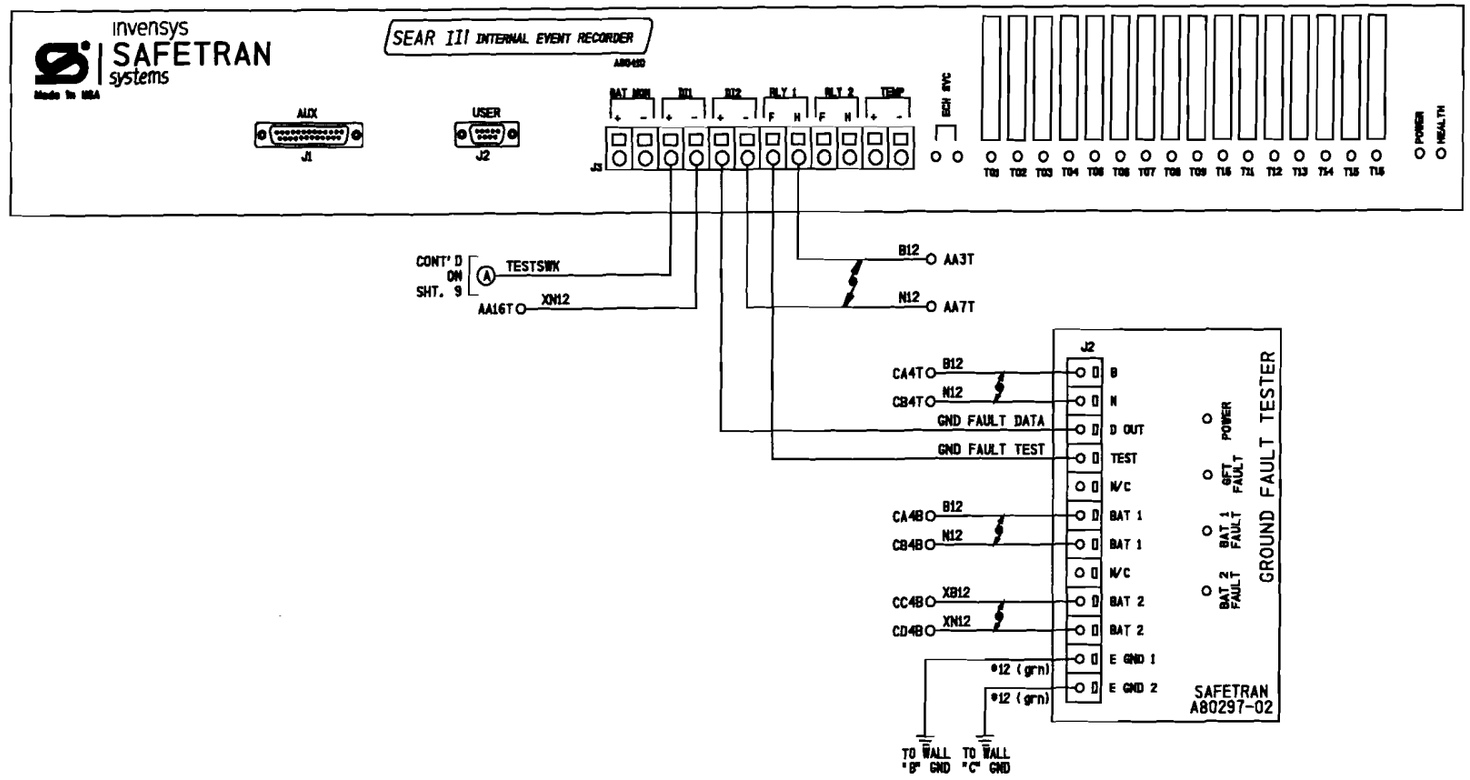

PROPOSED
DES. No. _____
RED-IN YELLOW-OUT
AS INSTALLED
DATE _____
BY _____

6' X 6' BUNGALOW

PROPOSED D	M	Y	REVISIONS	D	C	COMPLETED D	M	Y	C

DIVISION MIDWEST
SUB. FREEPORT
SD. 1015 C
MP. 48.23 TO 49.70

SIGNALS AND COMMUNICATIONS
EDMONTON, ALBERTA
30 APRIL 2007

DES. RLC
CH. PWW

SAFETRAN INTERNAL EVENT ANALYZER
SEARIII WITH GFT
IL RTE 47
PLATO CENTER, IL

M 04823C08

SAFETRAN SYSTEM CORP.

NOTES:

1) ALL WIRING #16 AWG UNLESS OTHERWISE NOTED.

2) DENOTES TWISTED PAIR.

REVISIONS

NO.	DATE	BY	DESCRIPTION	APP. BY
1				
2				
3				
4				
5				

SAFETRAN SYSTEMS CORPORATION

DES.: RLC	DATE: 04/30/07	JOB NO.: PICA10113
CKD.: PWW	ISSUE DATE: N/A	EST. NO.:
DRN.: RLC	PLAN NO.: N/A	SHEET N/A OF N/A
P TIME: 10:27	P DATE: 08-AUG-2007	CAD ID.: 04823C08

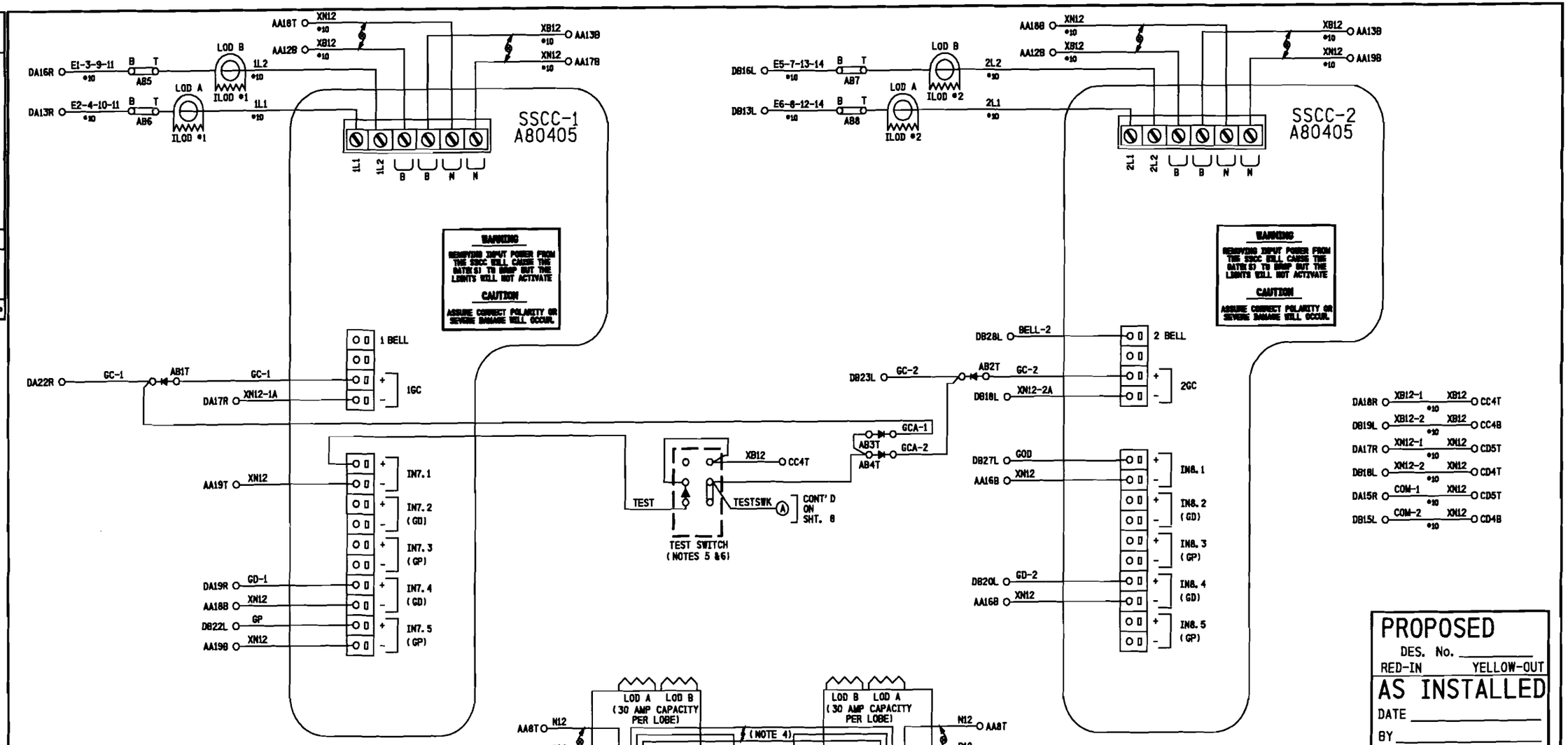

NOTES:

1) DENOTES RECTIFIER : (SAFETRAN #8008A299006)

2) DENOTES TWISTED PAIR.

3) ALL WIRING TO BE #16 AWG MINIMUM UNLESS OTHERWISE NOTED.

4) USE BELDEN CABLE, PART #8461-u500-60 FOR ALL ECHELON AND LAN WIRING.

5) MULTI-UNIT TERMINAL BLOCK

6) IF LINK IS CONNECTED BETWEEN XB12 AND TESTSWK TERMINAL GATES WILL REMAIN IN UP POSTION.

PROPOSED
DES. No. _____
RED-IN YELLOW-OUT
AS INSTALLED
DATE _____
BY _____

6' X 6' BUNGALOW

PROPOSED D	M	Y	REVISIONS	D	C	COMPLETED D	M	Y	C

DIVISION MIDWEST
SUB. FREEPORT
SD. 1015 C
MP. 48.23 TO 49.70

SIGNALS AND COMMUNICATIONS EDMONTON, ALBERTA | DES. RLC
30 APRIL 2007 | CH. PWW

GCP 4000 SSCC3+ MODULE
ISOLATED GATE 40AMP CONTROLLER
IL RTE 47

PLATO CENTER, IL

M 04823C09

SAFETRAN SYSTEM CORP.

SAFETRAN SYSTEMS CORPORATION
DES.: RLC | DATE: 04/30/07 | JOB NO.: PTCA10413
CKD.: PWW | ISSUE DATE: N/A | SHT. NO.: N/A
DWN.: RLC | PLAN NO.: N/A | SHEET N/A OF N/A
P TIME: 10:27 | P DATE: 06-AUG-2007 | CAD ID.: 04823C09

NO.	DATE	BY	REVISIONS DESCRIPTION	APP. BY
1				
2				
3				
4				
5				

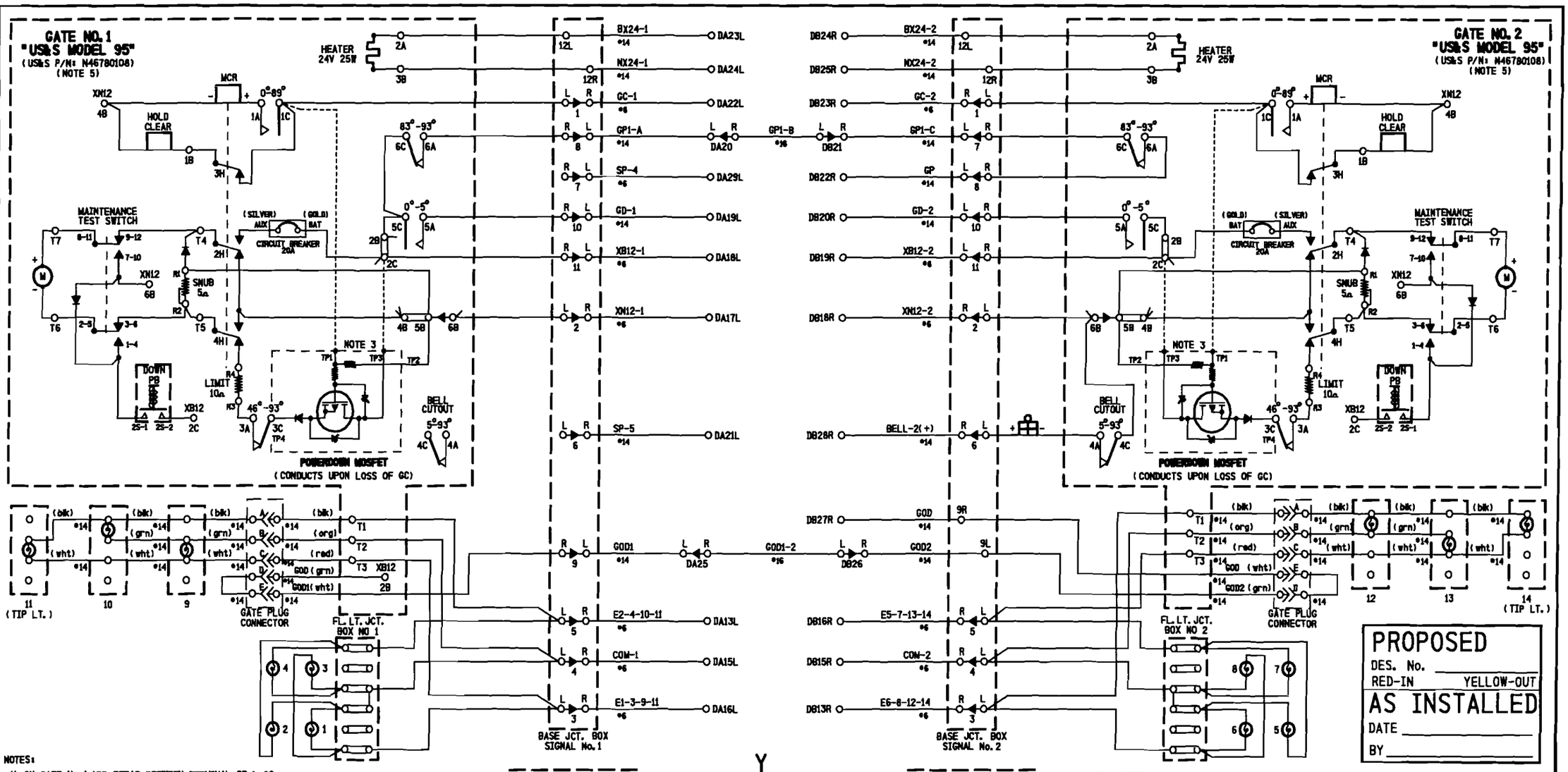

NOTES:

1) ON GATE No. 1 ADD STRAP BETWEEN TERMINAL 2B & 2C
ADD JUMPER BETWEEN TERMINAL 2B & 5C
AND BETWEEN TERMINAL 5C & 6C

2) ON GATE No. 2 ADD STRAP BETWEEN TERMINAL 2B & 2C
ADD JUMPER BETWEEN TERMINAL 2B & 5C
AND CONNECT GP AS SHOWN

3) POWERDOWN PCB TERMINALS TP1, TP3 & TP4 FIT
OVER TERMINALS 1C, 2C & 3C RESPECTIVELY

4) ALL WIRING #10 AWG MINIMUM UNLESS
OTHERWISE NOTED. WIRE SIZES SHOWN
ARE MINIMUM GAUGE.

5) GATE DESCENT TIME (RELEASE FROM VERTICAL TO FULLY
HORIZONTAL) TO BE WITHIN 11 SECONDS.

6) ENSURE ALL TERMINALS HAVE TWO SHOULDER NUTS.

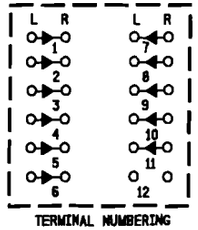

TERMINAL NUMBERING
BASE JCT. BOX 1

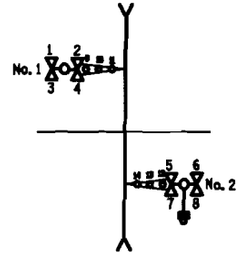

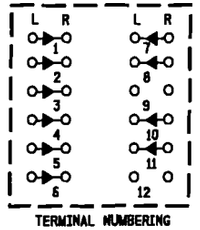

TERMINAL NUMBERING
BASE JCT. BOX 2

PROPOSED			REVISIONS	D	C	COMPLETED			C
D	M	Y				D	M	Y	

PROPOSED
DES. No. _____
RED-IN YELLOW-OUT
AS INSTALLED
DATE _____
BY _____

DIVISION MIDWEST
SUB. FREEPORT
SD. 1015 C
MP. 48.23 TO 49.70

SIGNALS AND COMMUNICATIONS
EDMONTON, ALBERTA
30 APRIL 2007

DES. RLC
CH. PWW

GATE MECHANISM CONTROL CIRCUITS

IL RTE 47
PLATO CENTER, IL

M 04823C10

SAFETRAN SYSTEM CORP.

SAFETRAN SYSTEMS CORPORATION
DES.: RLC | DATE: 04/30/07 | JOB NO.: PICA10113
CKD.: PWW | ISSUE DATE: N/A | EST. NO.: N/A
DRN.: RLC | PLAN NO.: N/A | SHEET N/A OF N/A
P TIME: 10:27 | P DATE: 06-AUG-2007 | CAD ID.: 04823C10

NO.	DATE	BY	DESCRIPTION	APP. BY
1				
2				
3				
4				
5				

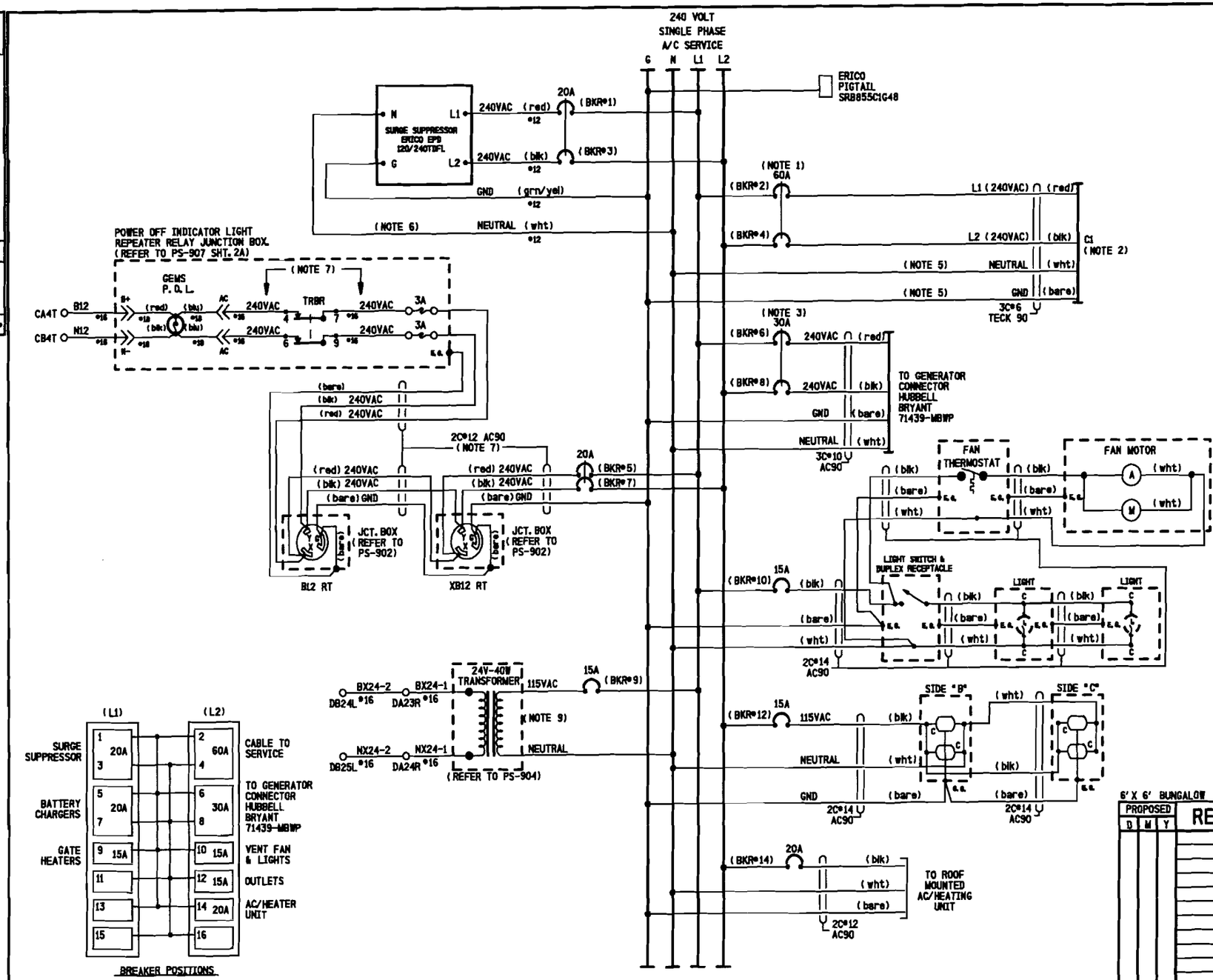

NOTES:

1) CIRCUIT BREAKER NOT TO EXCEED 60 AMPERES. RETAINING KIT PK4MB2LA MUST BE USED WITH 60A BREAKER.
2) FEEDER CIRCUIT BREAKER, AT STUB POLE SERVICE PANEL, NOT TO EXCEED 60 AMPERES.
3) A SWITCH TRANSFER KIT MUST BE INSTALLED BETWEEN THE SERVICE DISCONNECT BREAKER AND THE GENERATOR HOOK UP.
4) WHERE SEPARATE GROUND WIRE EXISTS BETWEEN THE SERVICE AND THE LOAD CENTER, REMOVE THE BRASS COLORED BONDING SCREW. (REFER TO SCHEMATIC ON BOX COVER FOR EXACT LOCATION)
5) S.C. #6 STRANDED, CSA TYPE R90 (X-LINK)
6) KEEP LEADS AS SHORT AS POSSIBLE
7) THE WHITE CONDUCTOR MUST BE MADE PERMANENTLY UNIDENTIFIABLE BY TAPING THIS CONDUCTOR RED. TAPING MUST BE CONTINUOUS WHERE THE SEPARATE CONDUCTORS HAVE BEEN MADE ACCESSIBLE AND VISIBLE.
8) « DENOTES WAGO TERMINAL
9) 24 VOLT - 40 WATT TRANSFORMER (CN STOCK #02-45-367)

PROPOSED
DES. No. _____
RED-IN YELLOW-OUT
AS INSTALLED
DATE _____
BY _____

6' X 6' BUNGALOW

PROPOSED			REVISIONS	D	C	COMPLETED			C
D	M	Y				D	M	Y	

DIVISION MIDWEST
SUB. FREEPORT
SD. 1015 C
MP. 48.23 TO 49.70

SIGNALS AND COMMUNICATIONS
EDMONTON, ALBERTA
30 APRIL 2007
DES. RLC
CH. PWW

POWER DISTRIBUTION

IL RTE 47
PLATO CENTER, IL

M 04823C11

SAFETRAN SYSTEM CORP.

SAFETRAN SYSTEMS CORPORATION
DES. : RLC | DATE: 04/30/07 | JOB NO. : PTCA10113
CKD. : PWW | ISSUE DATE: N/A | EST. NO. :N/A
DRN. : RLC | PLAN NO. :N/A | SHEET N/A OF N/A
P TIME: 10:27 | P DATE: 09-AUG-2007 | CAD ID. : 04823C11

NO.	DATE	BY	DESCRIPTION	APP. BY
1				
2				
3				
4				
5				

NO.	DATE	BY	DESCRIPTION	APP. BY
1				
2				
3				
4				
5				

REVISIONS

Program Report

Location and SIN

DOT Number: 289925M
Milepost Number: 48.85
Site Name: IL RTE 47

SIN: 762010010016

MCF and Template Selection

MCF Name: GCP-T6X-01-2.mcf
MCF Revision: 012
MCFCRC: 0DFE7A0C

Template = 1A:6 Trk BI

Program

BASIC: module configuration
Track 1 Slot = Track
Track 2/RIO 1 Slot = Not Used
Track 3 Slot = Not Used
Track 4 Slot = Not Used
Track 5/RIO 2 Slot = Not Used
Track 6/RIO 3 Slot = Not Used
SSCC-1 Slot = SSCC3I
SSCC-2 Slot = SSCC3I
SEAR Used = Yes

BASIC: MS/GCP operation
Track 1 : MS/GCP Operation = Yes

BASIC: Island operation
Track 1 : Island Used = Internal

BASIC: preemption
Preempt Logic = No

BASIC: radio Dax links
Radio DAX link A Used = No
Radio DAX link B Used = No

BASIC: Vital Comms links
Vital Comms link 1 Used = No
Vital Comms link 2 Used = No

PREDICTORS: track 1
Track 1 : Prime Used = Yes
Track 1 : Dax A Used = No
Track 1 : Dax B Used = No
Track 1 : Dax C Used = No
Track 1 : Dax D Used = No
Track 1 : Dax E Used = No
Track 1 : Dax F Used = No
Track 1 : Dax G Used = No

GCP: track 1
Track 1 : GCP Freq Category = Standard
Track 1 : GCP Frequency = 156 Hz
Track 1 : Approach Distance = 2566 ft
Track 1 : Uni/Bi/Sim-Bidirni = Bidirni
Track 1 : GCP Transmit Level = High
Track 1 : Island Connection = Isl1
Track 1 : Island Distance = 120 ft
Track 1 : Computed Distance = 9999 ft
Track 1 : Linearization Steps = 100

GCP: track 1 prime
Track 1 : Prime Warning Time = 25 sec
Track 1 : Prime Offset Distance = 0 ft
Track 1 : Switch MS EZ Level = 20
Track 1 : Prime MS/GCP Mode = Pred
Track 1 : Prime Pickup Delay = 30 sec
Track 1 : Prime UAX = Not Used

GCP: track 1 low EZ detect
Track 1 : Low EZ Detection Used = No
Track 1 : Positive Start = Off
Track 1 : Enhanced Detectn Used = Yes
Track 1 : Station Stop Timer = 10 sec
Track 1 : False Activate Level = Normal
Track 1 : Poor Shunting Level = 2

GCP: track 1 MS Control
Track 1 : MS/GCP Ctrl IP Used = No
Track 1 : MS Sensitivity Level = 0
Track 1 : Compensation Level = 1300
Track 1 : Low EX Adjustment = 39
Track 1 : Bidirn Dax Passthru = No

ISLAND: track 1
Track 1 : Isl Frequency = 8.3 kHz
Track 1 : Pickup Delay (2s +) = 0 sec

AND: track Anding
AND 1 XR Used = Yes
AND 2 Used = No
AND 3 Used = No
AND 4 Used = No
AND 5 Used = No
AND 6 Used = No
AND 7 Used = No
AND 8 Used = No

AND: AND 1 XR
AND 1 XR Track 1 = Prime
AND 1 Enable Used = Yes
And 1 Enable Pickup = 3 sec
AND 1 Enable Drop = 0 sec
AND 1 Wrap Used = No

ADVANCED: MS restart
MS/GCP Restart Used = No

ADVANCED: out of service
OOS Control = Display
OOS Timeout = Yes
OOS Timeout = 1 hrs

ADVANCED: track wrap circuits
Wrap LOS Timer = 5 sec
Track 1 Wrap Used = No

ADVANCED: trk 1 overrides
Track 1 : All Predictors Override Used = No

ADVANCED: OR logic
OR 1 Used = No
OR 2 Used = No
OR 3 Used = No
OR 4 Used = No

ADVANCED: Internal I/O 1
Pass Thrus = No
Int.1 Sets = Not Used
Int.1 Set by = Not Used
Int.2 Sets = Not Used
Int.2 Set by = Not Used
Int.3 Sets = Not Used
Int.3 Set by = Not Used
Int.4 Sets = Not Used
Int.4 Set by = Not Used

ADVANCED: Internal I/O 2
Int.5 Sets = Not Used
Int.5 Set by = Not Used
Int.6 Sets = Not Used
Int.6 Set by = Not Used
Int.7 Sets = Not Used
Int.7 Set by = Not Used
Int.8 Sets = Not Used
Int.8 Set by = Not Used

ADVANCED: site options
Daylight Savings = On
Units = Standard
Ext Maint Call Input = No
Emergency Activate IP = No
EZ/EX Logging = Change
EZ/EX Point Change = 3

SSCC
Gates Used = Yes
SSCCi+2 GPs Coupled = Yes
Min Activation = 20 sec
Rmt Activation Cancel = 3 min
Bell On Gate Rising = No
Mute Bell On Gate Down = No
SSCCIV Controller Used = No

SSCC: 1
SSCC-1 Activation = AND 1 XR
SSCC-1 Gate Delay = 3 sec
SSCC-1 Number of GPs = 1
SSCC-1 Number of GDs = 1
SSCC 1 : Flash Rate = 60
SSCC 1 : Low Battery Detection = No
SSCC 1 : Flash Sync = master
SSCC 1 : Invert Gate Output = No
SSCC 1 : Lamp Neutral Test = Off
Aux-1 Xng Ctrl Used = No

SSCC: 2
SSCC-2 Activation = AND 1 XR
SSCC-2 Gate Delay = 3 sec
SSCC-2 Number of GPs = 0
SSCC-2 Number of GDs = 1
SSCC 2 : Flash Rate = 60
SSCC 2 : Low Battery Detection = No
SSCC 2 : Flash Sync = slave
SSCC 2 : Invert Gate Output = No
SSCC 2 : Lamp Neutral Test = Off
Aux-2 Xng Ctrl Used = No

OUTPUT: assignment page 1
OUT L.1 = Not Used
OUT L.2 = Not Used

INPUT: assignment page 1
IN L.1 = Not Used
IN L.2 = Not Used

IO: assignment SSCC
OUT GC 1 = Gate Output 1
OUT GC 2 = Gate Output 2
IN 7.1 = AND 1 XR Enable
IN 7.2 = Not Used
IN 7.3 = Not Used
IN 7.4 = GD L.1
IN 7.5 = GP L.1
IN 8.1 = Not Used
IN 8.2 = Not Used
IN 8.3 = Not Used
IN 8.4 = GD 2.1
IN 8.5 = Not Used

SEAR
SEAR Subnode = 99
DI 1 = General1
DI 2 = Gnd Flt Tester 1
Rly 1 = Ground Fault fast
Rly 2 = Not Used

SEAR: Inputs
SP 2.1 = Not Used
SP 3.1 = Not Used
SP 4.1 = Not Used
SP 5.1 = Not Used
SP 6.1 = Not Used

SEAR: slot 1-4 Inputs
IN L.1 = Not Used
IN L.2 = Not Used
IN 2.1 = Not Used
IN 2.2 = Not Used
IN 3.1 = Not Used
IN 3.2 = Not Used
IN 4.1 = Not Used
IN 4.2 = Not Used

SEAR: Inputs slot 5
IN 5.1 = Not Used
IN 5.2 = Not Used

SEAR: Inputs slot 6
IN 6.1 = Not Used
IN 6.2 = Not Used

SEAR: slot 7-8 Inputs
IN 7.2 = Not Used
IN 7.3 = Not Used
IN 8.1 = General2
IN 8.2 = Not Used
IN 8.3 = Not Used
IN 8.5 = Not Used

SITE: programming
Radio Subnode = 1
Password Access = Off
Low Battery Enabled = Off

Configuration Package File

Filename: 289925M.pec

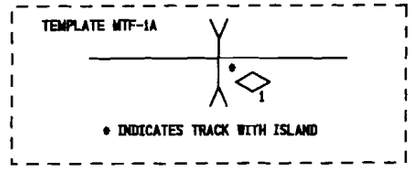

NOTES:

1) DISTANCE(S) TO BE VERIFIED AT INSTALLATION.
INDICATE SELECTED PROGRAMMED VALUE IF DIFFERENT THAN SHOWN.
REFER TO 4000 GCP INSTRUCTION/INSTALLATION MANUAL
FOR PROGRAMMING PARAMETERS.

2) EACH CONSTANT WARNING DEVICE SYSTEM TO BE PROGRAMMED TO
CONVERT TO A MOTION SENSOR 300 FEET FROM EDGE OF ROAD
TRAVELLED WAY.
SHUNT TRACK 300 FEET FROM EDGE OF ROAD TRAVELLED WAY
AND NOTE "EZ" VALUE.
PROGRAM EACH SYSTEM WITH THE INDICATED "EZ" VALUE +2.

4) VERIFY SET TIMER VALUE TO MATCH ACTUAL TRAIN MOVEMENT
WITHIN THE CROSSING APPROACH CIRCUITS.

PROPOSED
DES. No. _____
RED-IN YELLOW-OUT
AS INSTALLED
DATE _____
BY _____

PROPOSED D	M	Y	REVISIONS	D	C	COMPLETED D	M	Y	C

DIVISION MIDWEST
SUB. FREEPORT
SD. 1015 C
MP. 48.23 TO 49.70

SIGNALS AND COMMUNICATIONS
EDMONTON, ALBERTA

DES. RLC
CH. PWW

30 APRIL 2007

GCP 4000 NON REDUNDANT
PROGRAM INFORMATION
IL RTE 47

PLATO CENTER, IL

M 04823C12

SAFETRAN SYSTEM CORP.

SAFETRAN SYSTEMS CORPORATION
DWN. = RLC | DATE = 04/30/07 | JOB NO. = PIC4U0813
CKD. = PWW | ISSUE DATE = N/A | DWG. NO. = N/A
DWN. = RLC | PLAN NO. = N/A | SHEET N/A OF N/A
P. TIME = 10:37 | P. DATE = 08-AUG-2007 | CAD ID. = 04823C12

NO.	DATE	BY	DESCRIPTION	APP. BY
1				
2				
3				
4				
5				

REVISIONS

TO CONFIGURE SEARII & SEARIII PRESS SITE SETUP KEY. USE ARROW KEYS TO MAKE SELECTION, PRESS ENTER AFTER SELECTION HAS BEEN MADE.

STAGE 1

PROGRAM MENU QUESTIONS	PROGRAM	OPTIONS/RANGE
DATE/TIME?	CURRENT DATE/TIME	CURRENT DATE/TIME
AUTOMATIC DST ADJUSTMENT?	YES	YES, NO
TIME ZONE?	CENTRAL	EASTERN, CENTRAL, MOUNTAIN, PACIFIC, ALASKA, HAWAII, ATLANTIC, SASKATCHEWAN, NEW FOUNLAND
SITE NAME?	IL RTE 47	STREET NAME
MILE POST?	48.85	MILEAGE
DOT/CROSSING IS #?	289 925M	
TESTER TYPE?	CROSSING	CROSSING, WAYSIDE
DATE FORMAT?	dd-mm-yyyy	mm-dd-yyyy, dd-mm-yyyy
TEMPERATURE FORMAT?	CELSIUS	FAHRENHEIT, CELSIUS
SITE TYPE?		NO COM, BULLHORN, DIALUP, NODE, COLLECTOR
SITE ATCS ADDRESS?	7.620.100.100.99.01	7.RRR.LLL.GGG.99.01
OFFICE ATCS ADDRESS?		2.RRR.NN.DDDD
PRIMARY HOP ADDR? (FOR NODE USE)		7.RRR.LLL.GGG.00.01
BACKUP HOP ADDR1? (FOR NODE USE)		7.RRR.LLL.GGG.00.01
BACKUP HOP ADDR2? (FOR NODE USE)		7.RRR.LLL.GGG.00.01
POLL ID? (FOR COLLECTOR USE)		1-99
MODE? (FOR COLLECTOR USE)		GEN/ATCS, GENISYS
WAMS/XID? (FOR COLLECTOR USE)		ENABLED, DISABLE
OFFICE COMM. DEVICE? (FOR COLLECTOR USE)		DIRECT (RS232) MCM (RS232) MCM (ECHELON) SREAD SPEC (ECHELON) DIAL MODEM (RS232) S200 RADIO (RS422)
OFFICE PHONE NUMBER? (FOR COLLECTOR USE)		PHONE NUMBER OF WAMS
INIT STRING? (FOR COLLECTOR USE)		OPTIONAL HAYES MODEM INITIALIZATION STRING
FIELD COMM. DEVICE?		VHF COMM. (ECHELON) VHF COMM. (RS232) SPREAD SPEC (ECHELON) SPREAD SPEC (RS232)
USER PORT?	57600, 8, N, 1, N	BAUD, DATA BITS, PARITY, STOP BITS, FLOW CONTROL
AUX PORT?	9600, 8, N, 1, N	BAUD, DATA BITS, PARITY, STOP BITS, FLOW CONTROL

YOU WILL NOW SEE A MESSAGE "PLEASE WAIT COMPILING STAGE 1"
CONTINUE TO NEXT PROGRAM MENU QUESTIONS.

STAGE 2

QUESTION	PROGRAM	SELECTION 1 (MINIMUM)	SELECTION 2 (MAXIMUM)	CONDITION FOR MENU DISPLAY
RESET NAMES / MODULES ?	NO	YES	NO	ALWAYS
RAILROAD NUMBER ?	360 (IC)	1	999	ALWAYS
CROSSING CONFIGURATION	NORMAL	NORMAL	SPLIT GATE (NOTE 2)	ALWAYS
ENTRANCE GATES ?	0 (NOTE 3)	0	8	ALWAYS
GATE POSTION FAIL TIME (SECONDS) ?	N/A	10	60	GATES > 0
BATTERY BANKS ?	2	1	3	ALWAYS
BATT MON USED ?	NO	NO	YES	ALWAYS
INTERNAL CROSSING CONTROLLERS ?	2	0	2	ALWAYS
EXTERNAL CROSSING CONTROLLERS ?	0	0	2	CROSSING CONTROLLER = YES
VHF COMMUNICATOR ?	YES	YES	NO	ALWAYS
DTMF ACTIVATION?	NO	NO	YES	RAILROAD = 360 (IC)
ACTIVATION CODE ?	N/A	1	999	VHF COMMUNICATOR = YES
ACTIVATION TIMEOUT ?	N/A	1	600	VHF COMMUNICATOR = YES
ILOD MODULES ?	2	0	4	ALWAYS
ANY LED BULBS USED ?	YES	NO	YES	ILOD MODULES > 0
AUTO INSPECTION ?	NO	YES	NO	ALWAYS
BELL SENSORS ?	0	0	8	ALWAYS
BELL SENSORS TSS1 ?	N/A	NO	YES	BELL SENSORS > 0
BELL SENSORS TSS2 ?	N/A	NO	YES	BELL SENSORS > 0
BELL SENSORS TSS3 ?	N/A	NO	YES	BELL SENSORS > 0
BELL SENSORS TSS4 ?	N/A	NO	YES	BELL SENSORS > 0
BELL SENSORS TSS5 ?	N/A	NO	YES	BELL SENSORS > 0
BELL SENSORS TSS6 ?	N/A	NO	YES	BELL SENSORS > 0
BELL SENSORS TSS7 ?	N/A	NO	YES	BELL SENSORS > 0
BELL SENSORS TSS8 ?	N/A	NO	YES	BELL SENSORS > 0
BELL ON ?	N/A	GATES LOWERING	GATES MOVING	BELL SENSORS > 0
GFT'S ?	YES	YES	NO	ALWAYS
BATTERIES ON GFT1 ?	2	1	2	GFT'S = YES
GATE TIP SENSORS ?	N/A	YES	NO	GATES > 0
RTU ?	NO	NO	YES	ALWAYS
VHF VOICE CHANNEL ?	1 (NOTE 1)	1	8	VHF COMMUNICATOR = YES
VHF DATA CHANNEL ?	1 (NOTE 1)	1	8	VHF COMMUNICATOR = YES
USE CELL MODEM NON-CRITICAL FEATURE ?	NO	NO	YES	ALWAYS
FULL APPROACH MOVE ALARMS ?	ACTIVATE	ACTIVATE	DO NOT ACTIVATE	ALWAYS

YOU WILL NOW SEE A MESSAGE "PLEASE WAIT COMPILING STAGE 2"
CONTINUE TO NEXT PROGRAM MENU QUESTIONS.

STAGE 3

PROGRAM MENU QUESTIONS	PROGRAM
EDIT DIGITAL INPUTS	NO
EDIT BATTERIES	NO
EDIT RELAYS	NO
EDIT TEST LEDS	NO
EDIT ILOD SENSORS	NO
EDIT VHF SETTINGS	NO
GCP4K ATCS SUBNODE?	16

SAVE CONFIGURATION

NOTES:

1) INDICATE SELECTION IN SPACE PROVIDED.
2) ADDITIONAL OPTIONS: DUAL CROSSING, EXTERNAL ENTRANCE GATE CONTROLLERS.
3) SELECT "0" IF NO GATE TIP AND BELL SENSORS ARE USED. THUS GATE AND BELL SENSOR RELATED STEPS WILL NOT BE AVAILABLE, OVERWISE ERRORS IN SEARS RECORDING WILL OCCUR.

PROPOSED
DES. No. _____
RED-IN YELLOW-OUT
AS INSTALLED
DATE _____
BY _____

SEARIII EXECUTIVE SOFTWARE: 9V725-A01T SEARIII APPLICATION SOFTWARE: 9V864-A01H

PROPOSED D	PROPOSED M	PROPOSED Y	REVISIONS	D	C	COMPLETED D	COMPLETED M	COMPLETED Y	C

DIVISION MIDWEST
SUB. FREEPORT
SD. 1015 C
MP. 48.23 TO 49.70

SIGNALS AND COMMUNICATIONS EDMONTON, ALBERTA — DES. RLC
30 APRIL 2007 — CH. PWW

SEARIII
SETUP AND PROGRAM
IL RTE 47
PLATO CENTER, IL

M 04823C13

SAFETRAN SYSTEM CORP.

SAFETRAN SYSTEMS CORPORATION
DES.: RLC — DATE: 04/30/07 — JOB NO.: PTCA10137
CKD.: PWW — ISSUE DATE: N/A — EDIT. NO.: N/A
DWN.: RLC — PLAN NO.: N/A — SHEET N/A OF N/A
P. TIME: 10:27 — P. DATE: 09-JUN-2007 — CAD ID.: 04823C13

NO.	DATE	BY	DESCRIPTION	APP. BY
1				
2				
3				
4				
5				

CALIBRATION HISTORY

INITIAL SET UP BY: _____ DATE: _____

DC VOLTAGE READINGS AFTER CALIBRATION				CALIBRATION HISTORY										LINEARIZATION HISTORY (NOTE 1)							
				EZ/EX VALUES (TRACK UNOCCUPIED)				HARD WIRE SHUNT AT TERMINATION SHUNT						HARD WIRE SHUNT AT 50 PERCENT POINT OF SHUNT							
				EZ		EX		EZ		EX		50 PERCENT OF EZ VALUE		NO LINEARIZATION				LINEARIZATION COMPLETE			
														EZ		EX		STEP±		EZ	
				NRML	STBY	NRML	STBY	NRML	STBY	NRML	STBY	NRML	STBY	NRML	STBY	NRML	STBY	NRML	STBY	NRML	STBY
T1	Z1=	EAST	TRACK 1																		
	Z2=	WEST	TRACK 1																		

CALIBRATION HISTORY

INITIAL SET UP BY: _____ DATE: _____

DC VOLTAGE READINGS AFTER CALIBRATION				CALIBRATION HISTORY										LINEARIZATION HISTORY (NOTE 1)							
				EZ/EX VALUES (TRACK UNOCCUPIED)				HARD WIRE SHUNT AT TERMINATION SHUNT						HARD WIRE SHUNT AT 50 PERCENT POINT OF SHUNT							
				EZ		EX		EZ		EX		50 PERCENT OF EZ VALUE		NO LINEARIZATION				LINEARIZATION COMPLETE			
														EZ		EX		STEP±		EZ	
				NRML	STBY	NRML	STBY	NRML	STBY	NRML	STBY	NRML	STBY	NRML	STBY	NRML	STBY	NRML	STBY	NRML	STBY
T1	Z1=	EAST	TRACK 1																		
	Z2=	WEST	TRACK 1																		

CALIBRATION HISTORY

INITIAL SET UP BY: _____ DATE: _____

DC VOLTAGE READINGS AFTER CALIBRATION				CALIBRATION HISTORY										LINEARIZATION HISTORY (NOTE 1)							
				EZ/EX VALUES (TRACK UNOCCUPIED)				HARD WIRE SHUNT AT TERMINATION SHUNT						HARD WIRE SHUNT AT 50 PERCENT POINT OF SHUNT							
				EZ		EX		EZ		EX		50 PERCENT OF EZ VALUE		NO LINEARIZATION				LINEARIZATION COMPLETE			
														EZ		EX		STEP±		EZ	
				NRML	STBY	NRML	STBY	NRML	STBY	NRML	STBY	NRML	STBY	NRML	STBY	NRML	STBY	NRML	STBY	NRML	STBY
T1	Z1=	EAST	TRACK 1																		
	Z2=	WEST	TRACK 1																		

NOTE:

1) **SET UP APPROACH LENGTH AND LINEARIZATION CALIBRATION**
VERIFY THAT "ENHANCED DETECTION" MODE IS PROGRAMMED "OFF" BEFORE ATTEMPTING LINEARIZATION PROCEDURES.

PROPOSED
DES. No. _____
RED-IN YELLOW-OUT
AS INSTALLED
DATE _____
BY _____

6' X 6' BUNGALOW

PROPOSED D	M	Y	REVISIONS	D	C	COMPLETED D	M	Y	C

DIVISION MIDWEST
SUB. FREEPORT
SD. 1015 C
MP. 48.23 TO 49.70

SIGNALS AND COMMUNICATIONS EDMONTON, ALBERTA | DES. RLC
30 APRIL 2007 | CH. PWW

GCP 4000
CALIBRATION HISTORY
IL RTE 47

PLATO CENTER, IL

M 04823C14

SAFETRAN SYSTEM CORP.

SAFETRAN SYSTEMS CORPORATION
DES. : RLC | DATE: 04/30/07 | JOB NO. : PTCA05113
DRD. : PWW | ISSUE DATE: N/A | EST. NO. : N/A
DWN. : RLC | PLAN NO. : N/A | SHEET N/A OF N/A
P TIME: 10:27 | P DATE: 08-AUG-2007 | CAD ID. : 04823C14

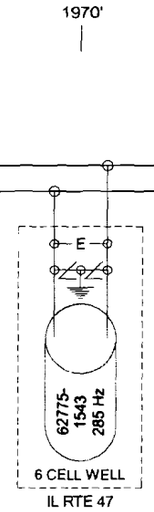

OBSOLETE SHEET
NEW SHUNT SHOWN ON
IL RTE 47
04823CO1

REGION MIDWEST	Illinois Central	COMMUNICATIONS & SIGNALS, ENGINEERING DEPARTMENT
DISTRICT FREEPORT		
FILENAME 04823C01	SD 1015 C MP 48.23 TO 48.80	
DESIGNER AVS / DATE 8-13-04	PLATO CENTER, IL	
SHEET NO. 1 OF 1	WB START IL RTE 47	

5		4		3	3-29-07	2	2-2-05	1	REVISIONS

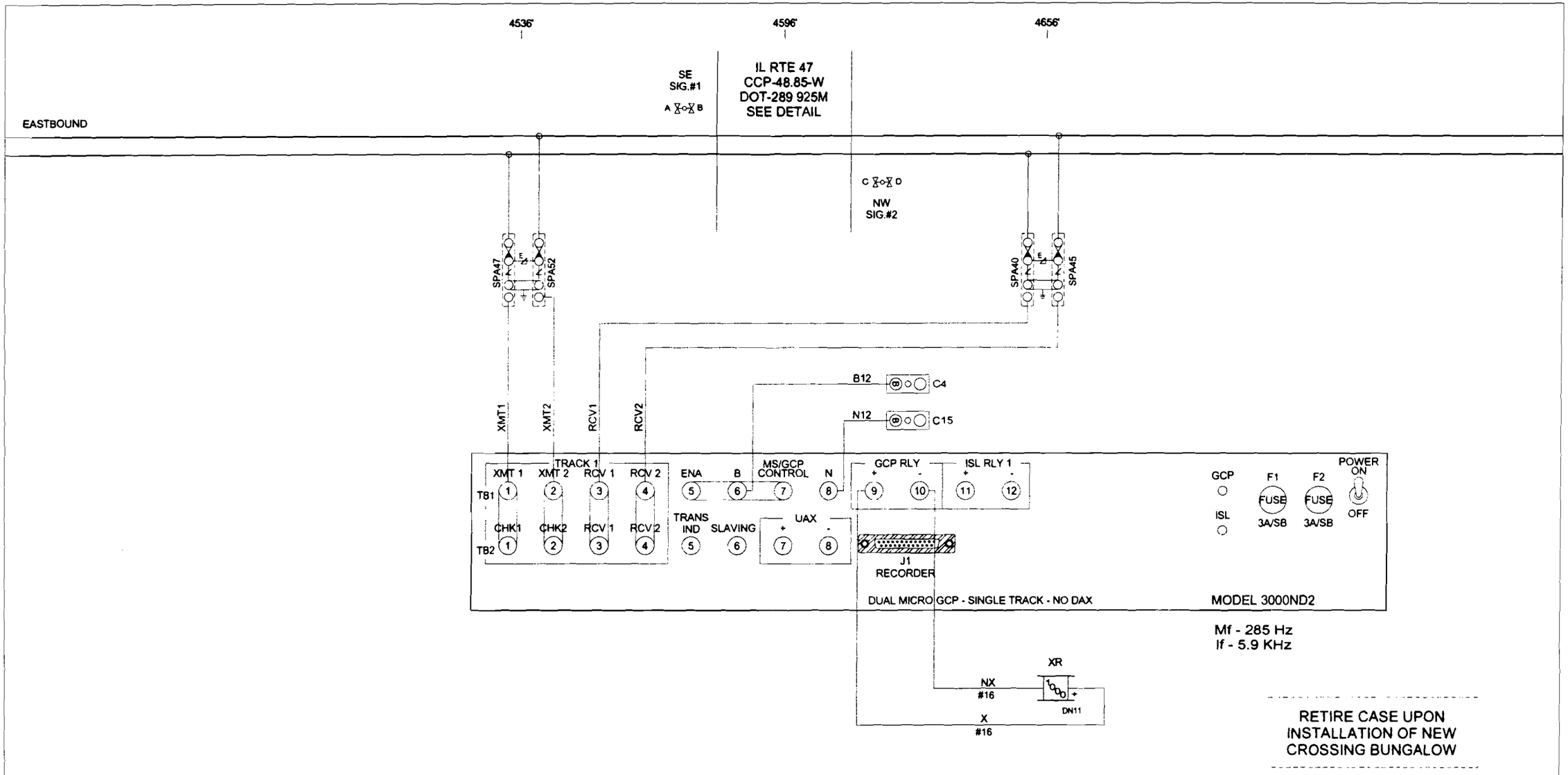

RETIRE CASE UPON
INSTALLATION OF NEW
CROSSING BUNGALOW

NOTES:
1. ALL WIRING #10 AWG UNLESS OTHERWISE NOTED
2. TERMINAL DESIGNATIONS:
   EC41A1 = ELECTROCODE 4 RACK #1, WAGO STRIP A, TERMINAL 1
   GCP1A1 = GCP RACK #1, WAGO STRIP A, TERMINAL 1
   SP1A1 = SURGE PANEL RACK #1, COLUMN A, TERMINAL 1
   PWR1A1 = POWER RACK #1, WAGO STRIP A, TERMINAL 1

REGION MIDWEST	Illinois Central — COMMUNICATIONS & SIGNALS, ENGINEERING DEPARTMENT
DISTRICT FREEPORT	
FILENAME 04880C01	SD 1015 C MP 48.80 TO 49.00
DESIGNER AVS / DATE 8-13-04	PLATO CENTER, IL
SHEET NO. 1 OF 7	IL RTE 47 GCP3000ND2

5	4	3	3-29-07	2	2-2-05	1	REVISIONS

3000 GCP APPLICATION HISTORY CARD

Equipment: 3000 ☐ 3000D2 ☐ 3000D2L ☐ 3000ND ☐ 3000ND2 ■ Unit/Serial No: _____ Crossing No: CCP-48.85-W

Crossing Name: IL RTE 47 City: PLATO CENTER State: IL

Date Installed: 2-2-05 Weather: _____

Island Frequency: T1: 5.9 kHz T2: _____ kHz

PROGRAMMING HISTORY

		Initial Programmed Value Date: _____	Program Change Date: _____	Program Change Date: _____
■ press PROGRAM key				
NUMBER OF TRACKS (Number of transceiver modules, 1 or 2)		1 ■ 2 ☐	1 ☐ 2 ☐	1 ☐ 2 ☐
FREQUENCY (MS/GCP)		285 Hz	Hz	Hz
UNIDIRECTIONAL/BIDIRECTIONAL	T1	UNI ☐ BI ■	UNI ☐ BI ☐	UNI ☐ BI ☐
	T2	UNI ☐ BI ☐	UNI ☐ BI ☐	UNI ☐ BI ☐
XMIT LEVEL	T1.	MAX ■ MED ☐	MAX ☐ MED ☐	MAX ☐ MED ☐
	T2.	MAX ☐ MED ☐	MAX ☐ MED ☐	MAX ☐ MED ☐
PREDICTOR/MOTION SENSOR	T1:	PRED ■ MS ☐	PRED ☐ MS ☐	PRED ☐ MS ☐
	T2:	PRED ☐ MS ☐	PRED ☐ MS ☐	PRED ☐ MS ☐
WARNING TIME SELECTED	T1	25 sec	sec	sec.
	T2	sec	sec	sec.
APPROACH DISTANCE SELECTED	T1	2566 ft	ft.	ft.
	T2.	ft	ft.	ft.
APPROACH DISTANCE COMPUTED	T1:	ft	ft	ft
	T2:	ft.	ft	ft
UAX PICKUP DELAY (UAX1) (0 = OFF)		0 sec.	sec.	sec.
ENA/UAX2 DELAY (0 = ENA)		0 sec.	sec	sec
ISLAND DISTANCE (between island track wire connections)	T1:	120 ft.	ft.	ft.
	T2:	ft.	ft	ft
NUMBER OF DAX'S		0 ■ 1 ☐ 2 ☐ 3 ☐ 4 ☐	0 ☐ 1 ☐ 2 ☐ 3 ☐ 4 ☐	0 ☐ 1 ☐ 2 ☐ 3 ☐ 4 ☐
DAX A TRACK ASSIGNMENT		T1 ☐ T2 ☐	T1 ☐ T2 ☐	T1 ☐ T2 ☐
DAX A DISTANCE (0=PREEMPT)		ft.	ft	ft.
DAX A WARNING TIME		sec.	sec.	sec.
DAX B TRACK ASSIGNMENT		T1 ☐ T2 ☐	T1 ☐ T2 ☐	T1 ☐ T2 ☐
DAX B DISTANCE (0=PREEMPT)		ft.	ft.	ft.
DAX B WARNING TIME		sec.	sec.	sec.
DAX C TRACK ASSIGNMENT		T1 ☐ T2 ☐	T1 ☐ T2 ☐	T1 ☐ T2 ☐
DAX C DISTANCE (0=PREEMPT)		ft.	ft.	ft.
DAX C WARNING TIME		sec.	sec.	sec.
DAX D TRACK ASSIGNMENT		T1 ☐ T2 ☐	T1 ☐ T2 ☐	T1 ☐ T2 ☐
DAX D DISTANCE (0=PREEMPT)		ft	ft.	ft.
DAX D WARNING TIME		sec.	sec.	sec.

PROGRAMMING HISTORY (continued)

	Initial Programmed Value Date: _____	Program Change Date: _____	Program Change Date: _____
SLAVING MASTER/SLAVE	MASTER ■ SLAVE ☐	MASTER ☐ SLAVE ☐	MASTER ☐ SLAVE ☐
PASSWORD ENABLED	DISABLED ☐	DISABLED ☐	DISABLED ☐
	ENABLED ■	ENABLED ☐	ENABLED ☐
RECORDER INSTALLED	NOT INSTALLED ■	NOT INSTALLED ☐	NOT INSTALLED ☐
	INSTALLED ☐	INSTALLED ☐	INSTALLED ☐
RS-232-C BAUD RATE	9600 bps	bps	bps
RS-232-C DATA BITS	7 ☐ 8 ■	7 ☐ 8 ☐	7 ☐ 8 ☐
RS-232-C STOP BITS	1 ■ 2 ☐	1 ☐ 2 ☐	1 ☐ 2 ☐
RS-232-C PARITY	NONE ■ MARK ☐	NONE ☐ MARK ☐	NONE ☐ MARK ☐
	ODD ☐ SPACE ☐	ODD ☐ SPACE ☐	ODD ☐ SPACE ☐
(NOTE: SET DATE & TIME AS REQUIRED)	EVEN ☐	EVEN ☐	EVEN ☐
DATE (e.g., MON 27 FEB 1995)	_____	_____	_____
TIME (e.g. 11:25:43 AM)	_____	_____	_____
DAYLIGHT SAVINGS	ON ■ OFF ☐		

EXPANDED PROGRAMMING HISTORY (Function Mode, Optional)

		Initial Programmed Value Date: _____	Program Change Date: _____	Program Change Date: _____
■ press FUNCTION key				
SWITCH TO MS (enter EZ value)	T1	10 EZ	EZ	EZ
	T2:	0 EZ	EZ	EZ
TRANSFER DELAY MS TO GCP (O=OFF)	T1.	0 sec	sec	sec.
	T2:	0 sec	sec	sec.
PRIME PREDICTION OFFSET (O=OFF)	T1	0 ft	ft	ft.
	T2	0 ft	ft.	ft.
PICKUP DELAY PRIME		15 sec	sec.	sec.
PICKUP DELAY DAX A		N/A sec.	sec	sec
PICKUP DELAY DAX B		N/A sec	sec.	sec.
PICKUP DELAY DAX C		N/A sec.	sec	sec.
PICKUP DELAY DAX D		N/A sec	sec	sec.
COMPENSATION VALUE	T1:	_____	_____	_____
	T2:	_____	_____	_____
NUMBER OF TRACK WIRES	T1:	4 ■ 6 ☐	4 ☐ 6 ☐	4 ☐ 6 ☐
	T2:	4 ☐ 6 ☐	4 ☐ 6 ☐	4 ☐ 6 ☐

CALIBRATION HISTORY

		CALIBRATION HISTORY		LINEARIZATION HISTORY				
		EZ/EX VALUES (TRACK UNOCCUPIED)		HARDWIRE SHUNT AT TERMINATION SHUNT		HARDWIRE SHUNT AT 50 PERCENT POINT OF TRACK		
						NO LINEARIZATION	LINEARIZATION COMPLETE	
		EZ	EX	EZ VALUE	EZ/2 VALUE	EZ VALUE	STEP ±	EZ
EAST	TRACK 1							
WEST	TRACK 1							
EAST	TRACK 2							
WEST	TRACK 2							

RETIRE CASE UPON INSTALLATION OF NEW CROSSING BUNGALOW

REGION	MIDWEST
DISTRICT	FREEPORT
FILENAME	04880C02
DESIGNER	AVS
DATE	8-13-04
SHEET NO.	2 OF 7

Illinois Central

COMMUNICATIONS & SIGNALS, ENGINEERING DEPARTMENT

SD 1015 C MP 48.80 TO 49.00

PLATO CENTER, IL

IL RTE 47

GCP Application Info.

5	4	3	3-29-07	2	2-2-05	1	REVISIONS

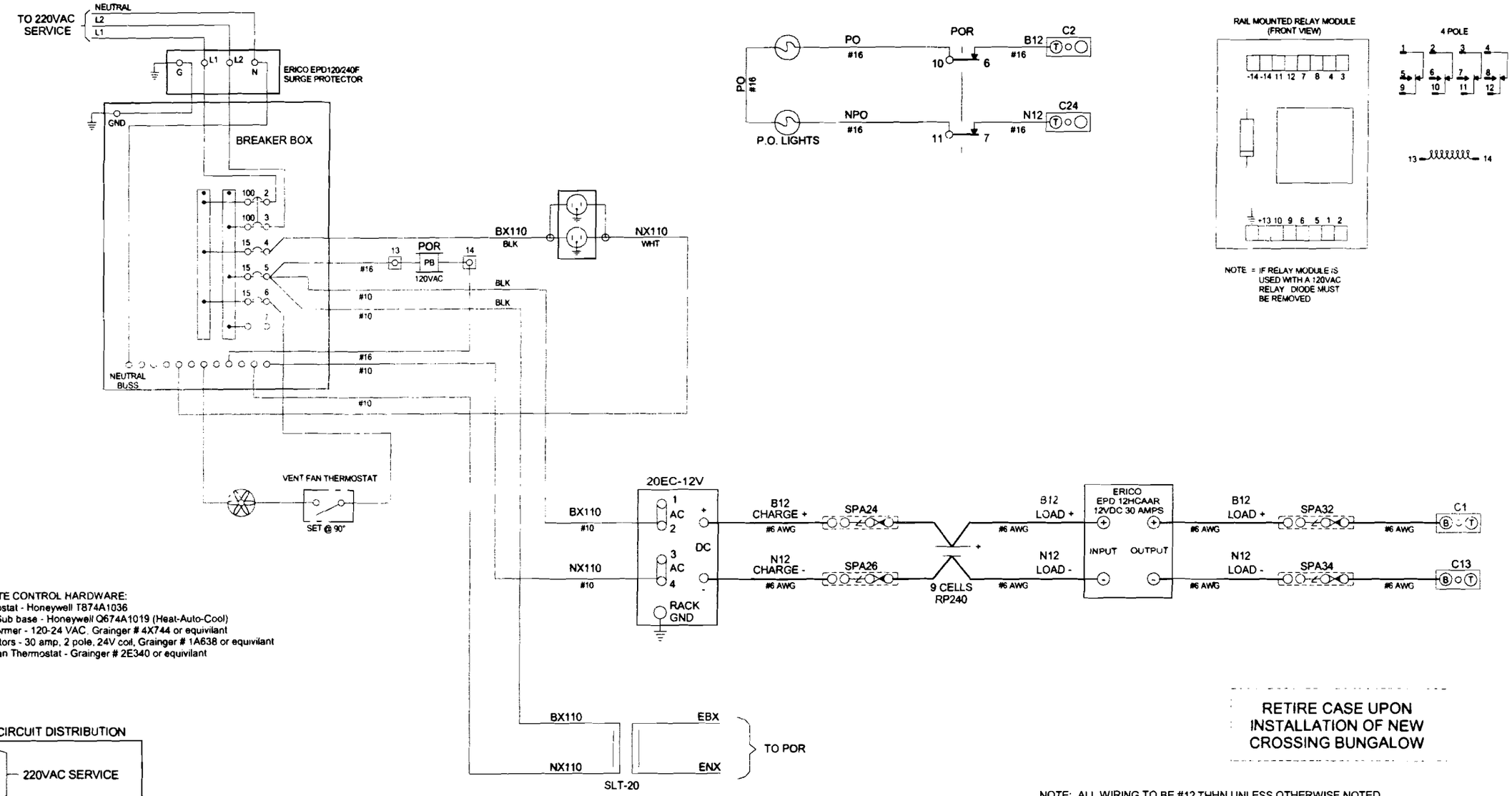

CLIMATE CONTROL HARDWARE:
Thermostat - Honeywell T874A1036
T-stat Sub base - Honeywell Q674A1019 (Heat-Auto-Cool)
Transformer - 120-24 VAC, Grainger # 4X744 or equivilant
Contactors - 30 amp, 2 pole, 24V coil, Grainger # 1A638 or equivilant
Vent Fan Thermostat - Grainger # 2E340 or equivilant

CIRCUIT DISTRIBUTION

2, 3	220VAC SERVICE
4	OUTLET
5	DC RECTIFIERS
6	VENT FAN
7	110 V (SPARE)

RETIRE CASE UPON INSTALLATION OF NEW CROSSING BUNGALOW

NOTE: ALL WIRING TO BE #12 THHN UNLESS OTHERWISE NOTED.

REGION	MIDWEST
DISTRICT	FREEPORT
FILENAME	04880C03
DESIGNER	AVS
DATE	8-13-04
SHEET NO.	3 OF 7

Illinois Central — COMMUNICATIONS & SIGNALS, ENGINEERING DEPARTMENT

SD 1015 C MP 48.80 TO 49.00
PLATO CENTER, IL
IL RTE 47
AC/DC Power Distribution

5		4		3	3-29-07	2	2-2-05	1	REVISIONS

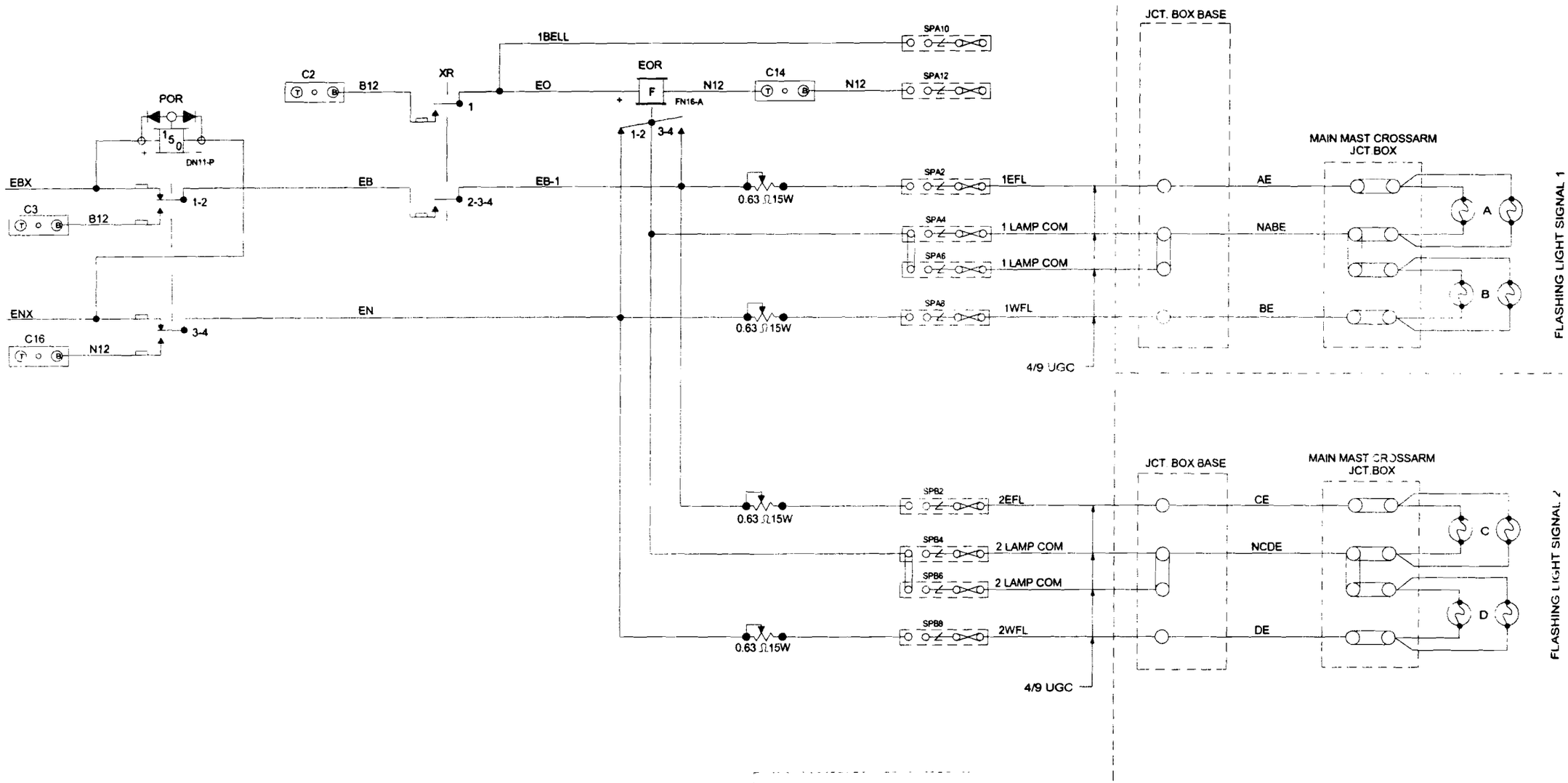

RETIRE CASE UPON
INSTALLATION OF NEW
CROSSING BUNGALOW

REGION MIDWEST	Illinois Central	COMMUNICATIONS & SIGNALS, ENGINEERING DEPARTMENT
DISTRICT FREEPORT		
FILENAME 04880C04	SD 1015 C MP 48.80 TO 49.00	
DESIGNER AVS / DATE 8-13-04	PLATO CENTER, IL	
SHEET NO. 4 OF 7	IL RTE 47 FLASHER CONTROL CIRCUITS	

5	4	3	3-29-07	2	2-2-05	1	REVISIONS

SURGE PANEL

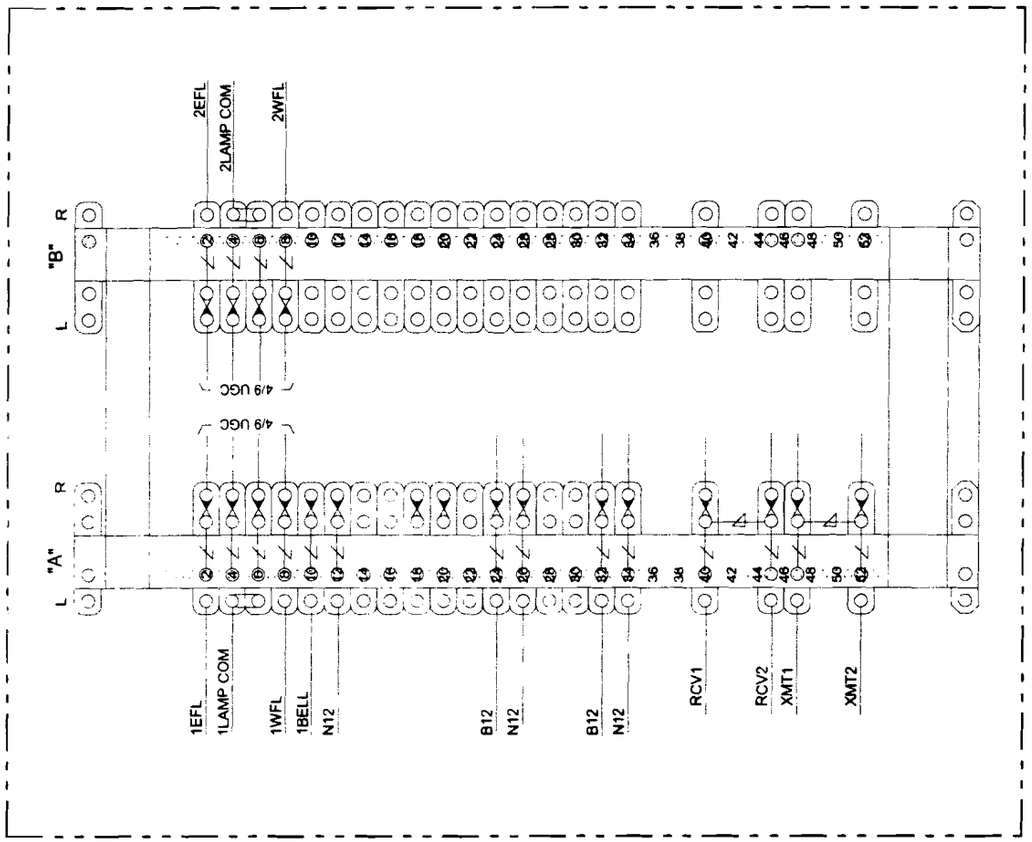

RETIRE CASE UPON INSTALLATION OF NEW CROSSING BUNGALOW

= STRAP & TEST NUT

REGION MIDWEST	Illinois Central — COMMUNICATIONS & SIGNALS, ENGINEERING DEPARTMENT
DISTRICT FREEPORT	
FILENAME 04880C05	SD 1015 C MP 48.80 TO 49.00
DESIGNER AVS / DATE 8-13-04	PLATO CENTER, IL
SHEET NO. 5 OF 7	IL RTE 47 LINE & TRACK SURGE PANEL

5 4 3 3-29-07 2 2-2-05 1 REVISIONS

DC
POWER BUSSES

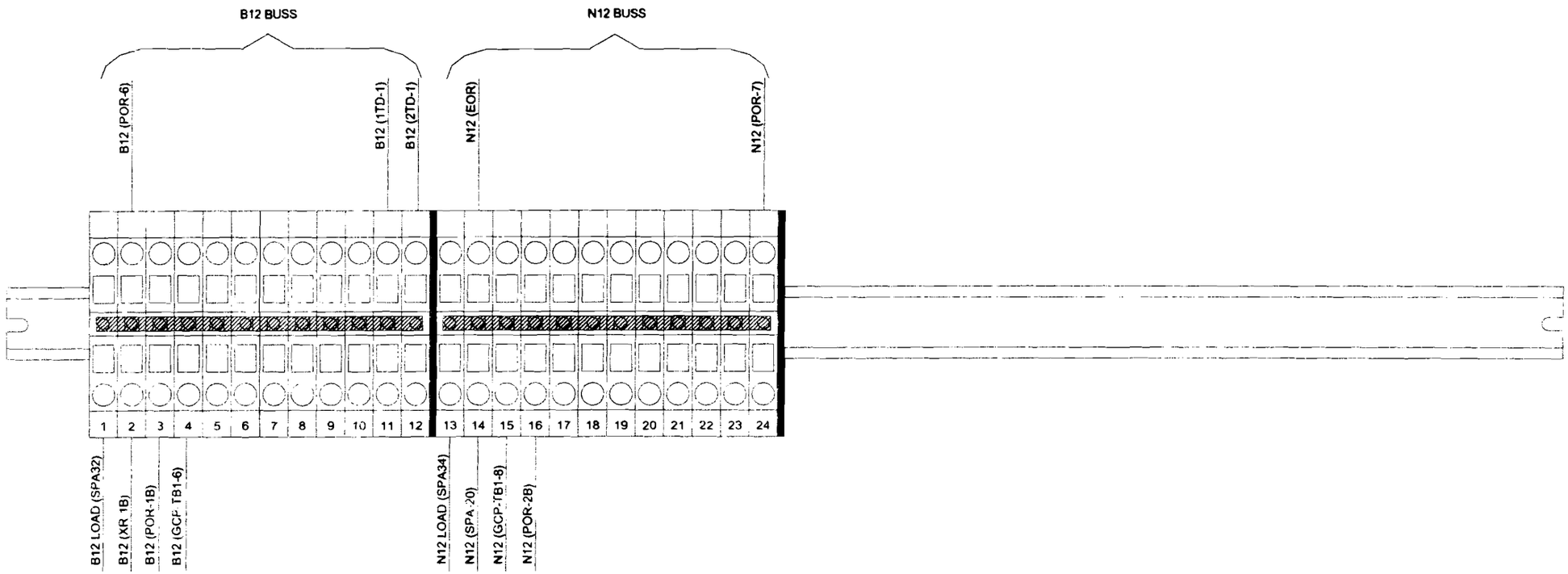

RETIRE CASE UPON
INSTALLATION OF NEW
CROSSING BUNGALOW

NOTE:

1. WAGO TERMINATION DETAILS ARE SHOWN FOR TROUBLESHOOTING REFERENCE ONLY. CIRCUITS SHOULD BE WIRED FROM THE APPROPRIATE CIRCUIT PLANS
2. NOMENCLATURE IN PARENTHESES INDICATE THE WIRE DESTINATION

REGION MIDWEST	Illinois Central	COMMUNICATIONS & SIGNALS, ENGINEERING DEPARTMENT
DISTRICT FREEPORT		
FILENAME 04880C06	SD 1015 C MP 48.80 TO 49.00	
DESIGNER AVS / DATE 8-13-04	PLATO CENTER, IL	
SHEET NO. 6 OF 7	IL RTE 47 Wago Terminals	

5	4	3	3-29-07	2	2-2-05	1	REVISIONS

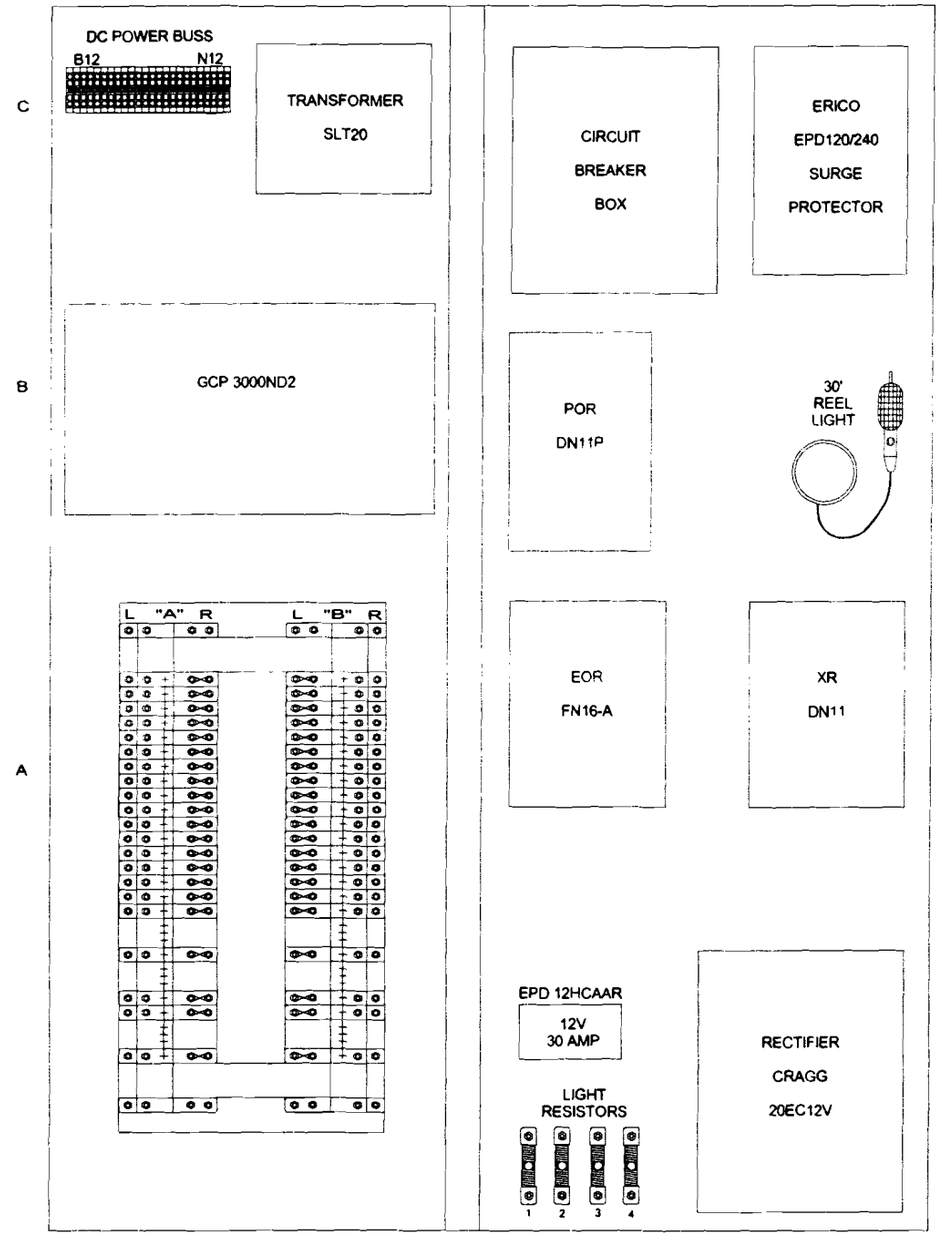

60" CASE

RETIRE CASE UPON
INSTALLATION OF NEW
CROSSING BUNGALOW

REGION MIDWEST	Illinois Central — COMMUNICATIONS & SIGNALS, ENGINEERING DEPARTMENT
DISTRICT FREEPORT	
FILENAME 04880C07	SD 1015 C MP 48.80 TO 49.00
DESIGNER AVS / DATE 8-13-04	PLATO CENTER, IL
SHEET NO. 7 OF 7	IL RTE 47 Case Layout

5	4	3	3-29-07	2	2-2-05	1	REVISIONS

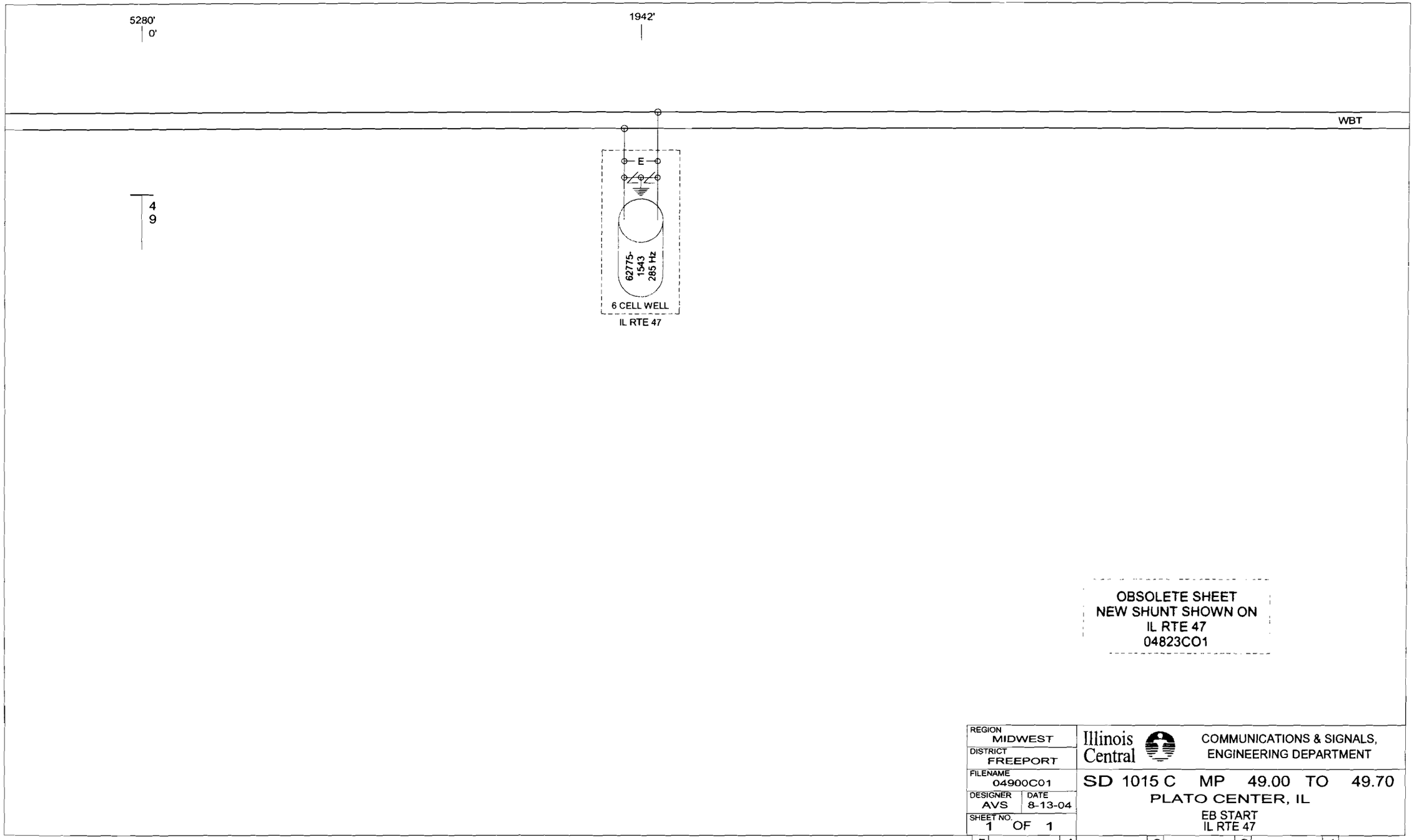

OBSOLETE SHEET
NEW SHUNT SHOWN ON
IL RTE 47
04823CO1

REGION MIDWEST	Illinois Central — COMMUNICATIONS & SIGNALS, ENGINEERING DEPARTMENT
DISTRICT FREEPORT	
FILENAME 04900C01	SD 1015 C MP 49.00 TO 49.70
DESIGNER AVS / DATE 8-13-04	PLATO CENTER, IL
SHEET NO. 1 OF 1	EB START IL RTE 47

5		4		3	3-29-07	2	2-2-05	1	REVISIONS