F.A.U. RTE.	SECTION	COUNTY	TOTAL SHEETS	SHEET NO.
	94-P4031-00	DUPAGE	54	24

CONTRACT NO. 83560

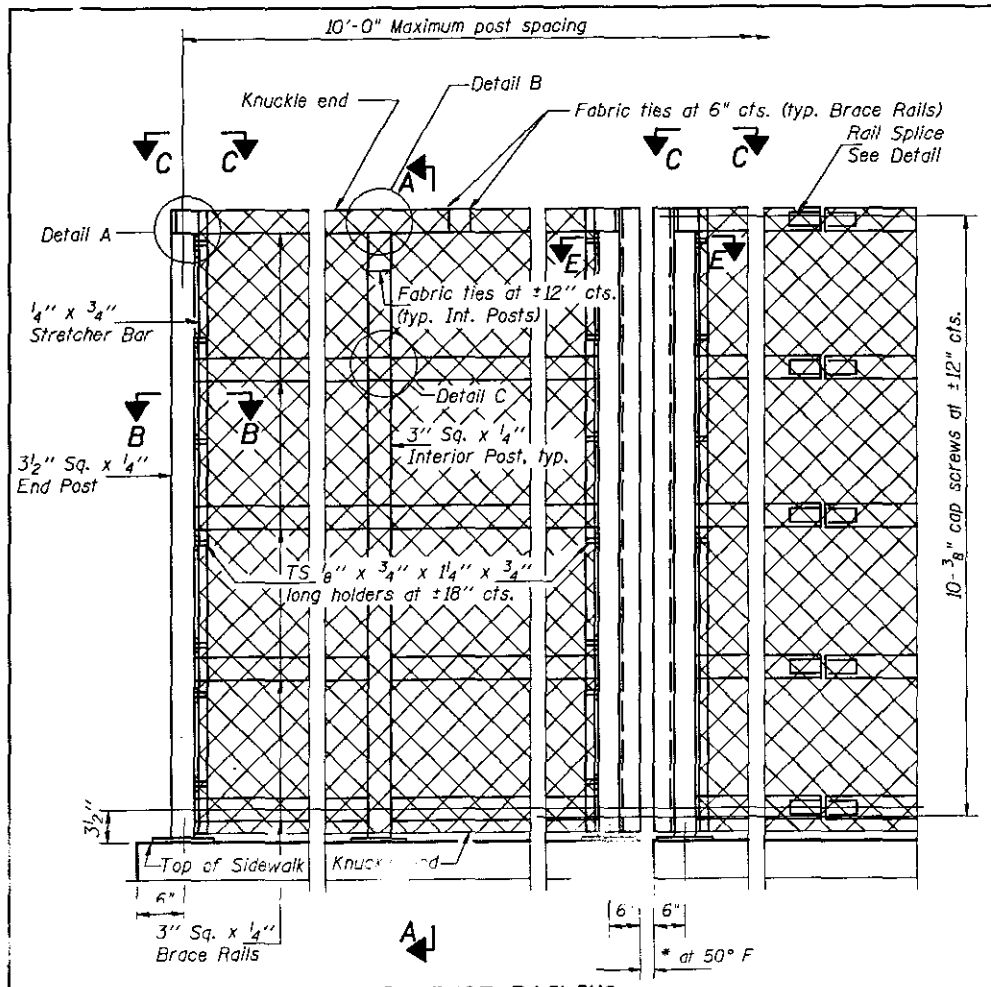

BRIDGE FENCE RAILING ELEVATION
(Inside Face)

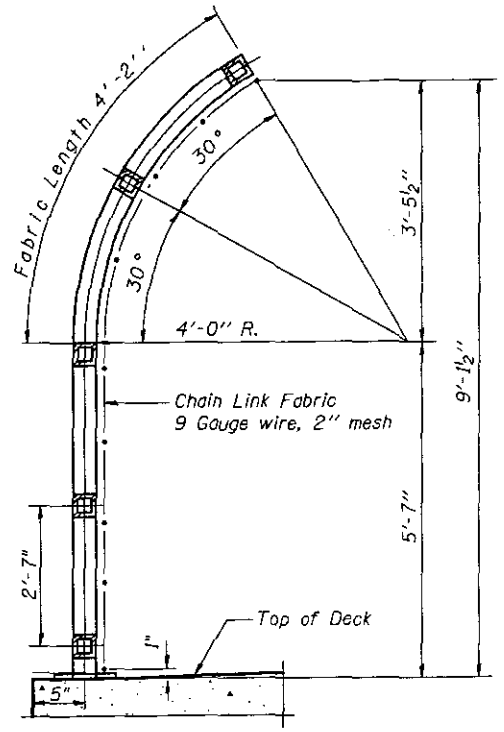

SECTION A-A

Note:
Cost of shaft foundations included in pay item "Bicycle Railing"

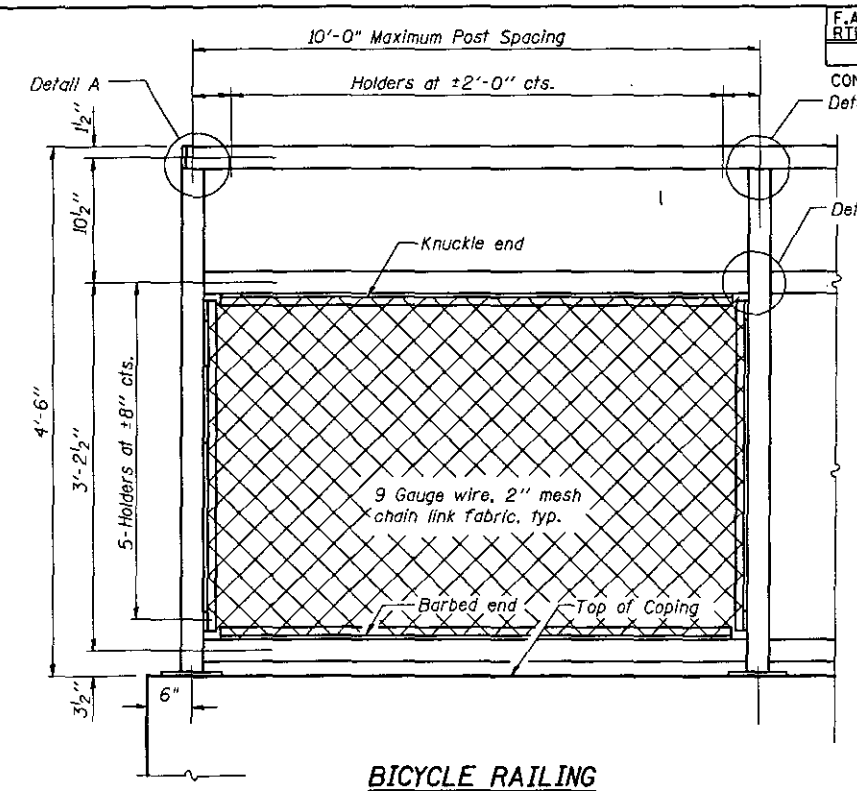

BICYCLE RAILING

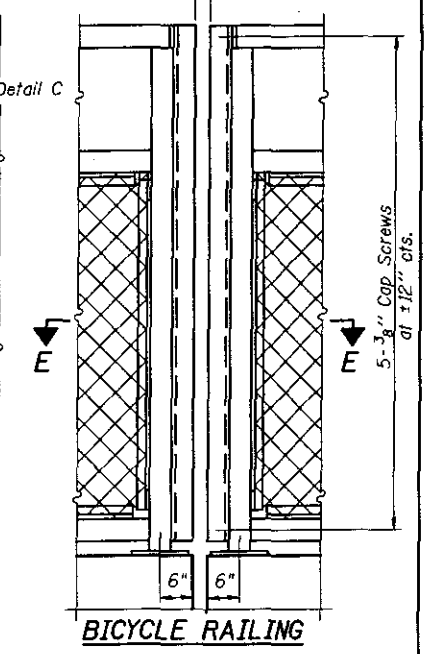

BICYCLE RAILING

NOTES

Railing shall be according to Section 509 of the Standard Specifications, except as noted, and will be paid for at the Contract Unit Price per foot for Bridge Fence Railing and Bicycle Railing.

The 9 gauge fabric ties shall be according to Article 1006.27(d) of the Standard Specifications.

Installation of the chain link fabric shall be according to Section 664 of the Standard Specifications.

Hollow structural sections shall conform to the requirements of ASTM designation A 847, weathering structural steel tubing.

All other steel shapes and plates shall conform to the requirements of ASTM A 588, Grade 50.

The chain link fabric shall be placed along pedestrian side as shown on Section A-A.

Stretcher bars shall be used at each end of fabric.

A minimum of one complete turn is required at ends of all fabric ties.

If the option of drilling and epoxy grouting the anchor rods is chosen, the Contractor shall use the capsule or the adhesive cartridge type anchor rods that have been previously tested and given a prior approval by the Department. The Contractor shall install these anchor rods in pre-drilled holes according to the manufacturer's recommendations and procedures. The capsule or the adhesive cartridge shall be sealed with pre-measured amounts of the adhesive chemical.

Space reinforcement to miss anchor rods.

The chain link fabric shall conform to the requirements of Article 1006.27(a)(1)d of the Standard Spec's.

The chain link fabric, ties and other accesories will be vinyl-coated in brown color, as approved by the Engineer.

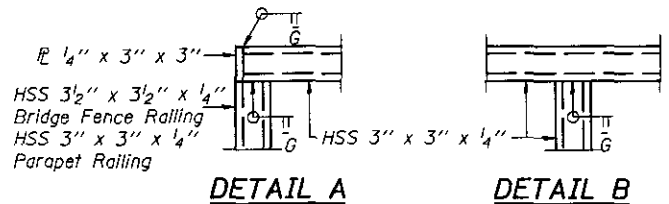

DETAIL A

DETAIL B

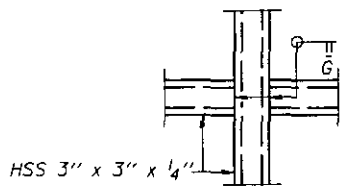

DETAIL C

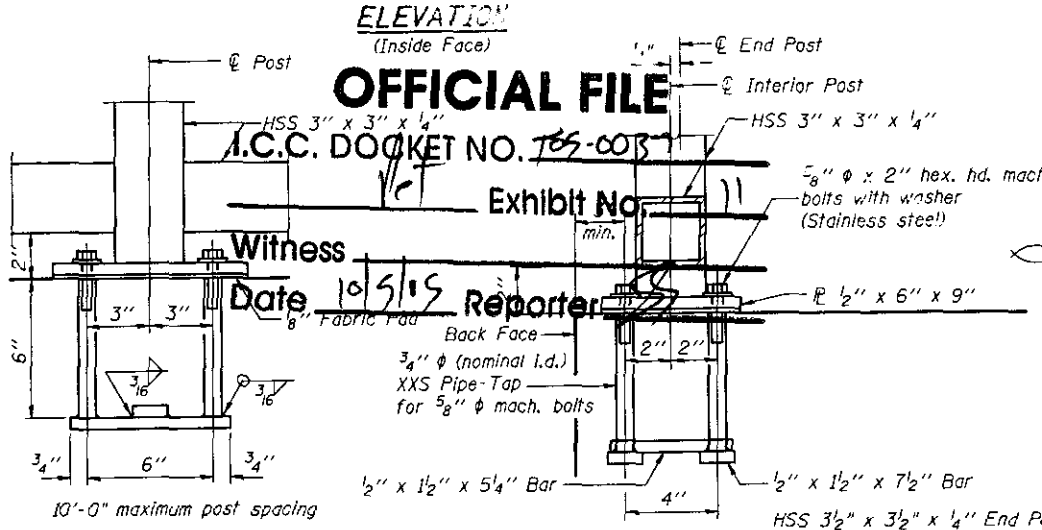

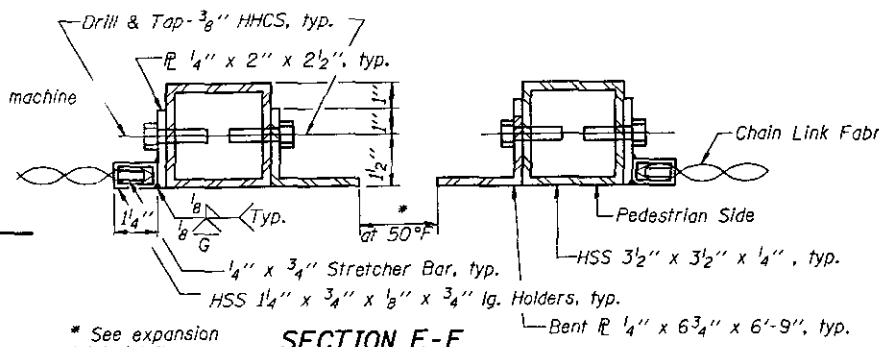

* See expansion joint details.

SECTION E-E
(At Expansion Joint)

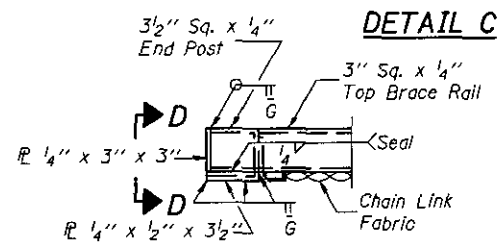

VIEW C-C

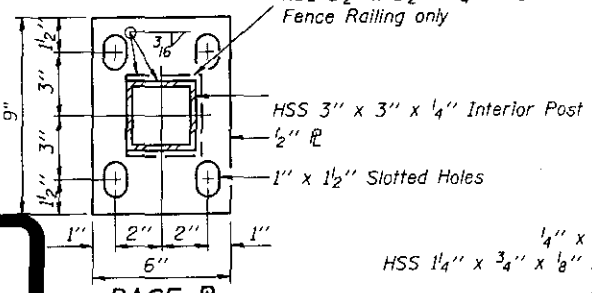

BASE PL

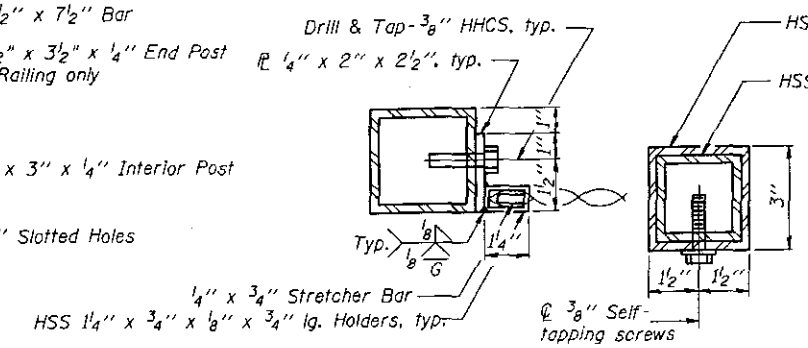

SECTION B-B

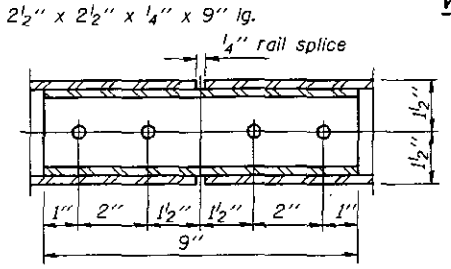

RAIL SPLICE

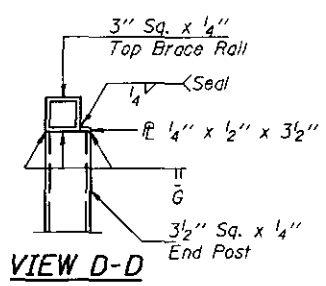

VIEW D-D

ANCHOR BOLT DETAILS

In lieu of the cast-in-place anchor device shown, the Contractor has the option of drilling and epoxy grouting 5/8" φ anchor rods. Embedment shall be according to the manufacturer's specifications.

BILL OF MATERIAL

Item	Unit	Quantity
Bridge Fence Railing	Foot	1,540
Bicycle Railing	Foot	700
Rustic Rail Fence	Foot	590

OFFICIAL FILE
I.C.C. DOCKET NO. T05-0037
Exhibit No. 11
Witness
Date 10/5/15 Reporter

Case No. T05-0037
EXHIBIT 11
Blumberg No. 3208

INDEX OF BRIDGE SHEETS
SHEET 51 OF 529

Copyright © 2003 Cemcon, Ltd. All rights reserved.

PREPARED FOR:
WHEATON PARK DISTRICT
666 S. MAIN STREET
WHEATON, ILLINOIS 60187

PREPARED BY:
CEMCON, Ltd.
Consulting Engineers, Land Surveyors & Planners
2280 White Oak Circle, Suite 100
Aurora, Illinois 60504-9675
Ph: 630.862.2100 Fax: 630.862.2199
E-Mail: cadd@cemcon.com Website: www.cemcon.com

REVISIONS

NO.	DATE	DESCRIPTION	NO.	DATE	DESCRIPTION

BRIDGE RAILING DETAILS & BICYCLE RAILING DETAILS

PEDESTRIAN/BICYCLE PATH BRIDGE OVER UNION PACIFIC RAILROAD

FILE NAME: RAILING	DSGN. BY: MMH	JOB NO.: 551007	FLD. BK./PG.: -----	SHEET NO. 24 OF 54
DISC. NUMBER: 551007	DRN. BY: RDS	DATE: 12-21-04	SCALE: ----	

12-22-03 I:\SOSKPROJ\551007\DGN\RAILING.DGN

F.A.-RTE.	SECTION	COUNTY	TOTAL SHEETS	SHEET NO.
	94-P4081-00-BR	DUPAGE	54	36

CONTRACT NO. 83560

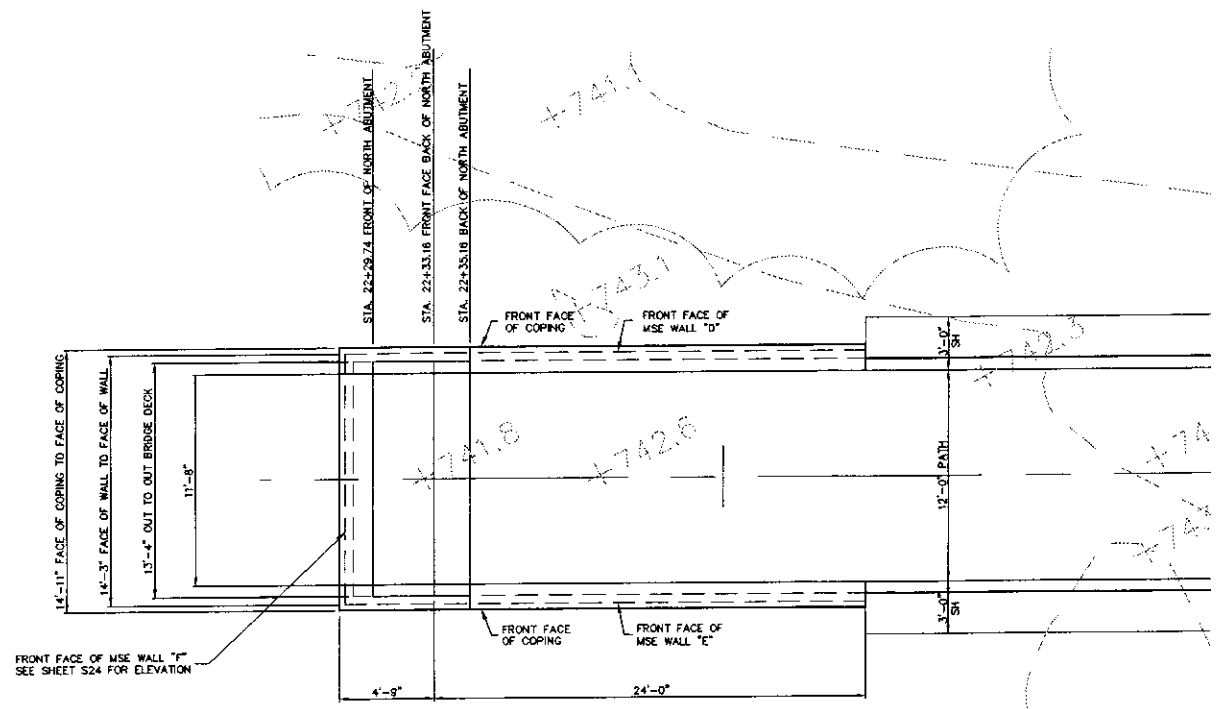

PLAN

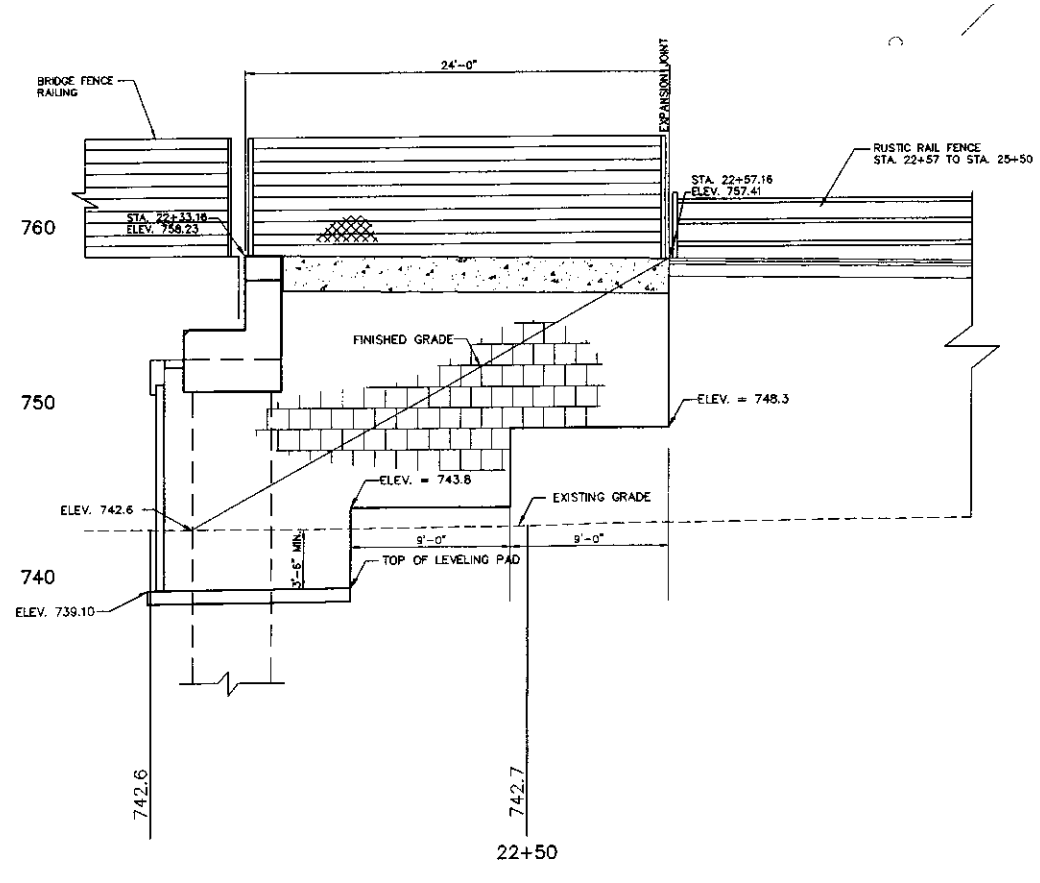

ELEVATION
MSE WALL "D"
(MSE WALL "E" SIMILAR)

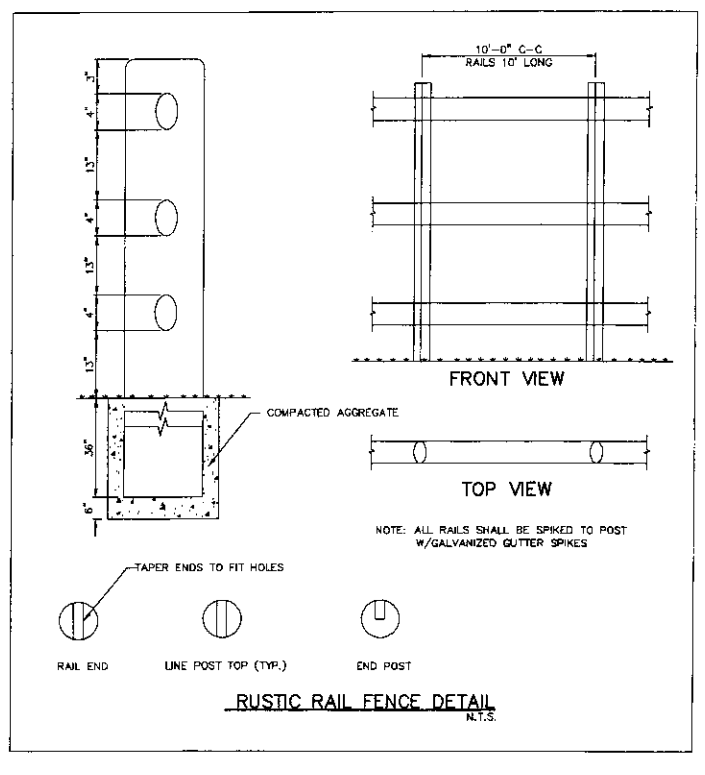

RUSTIC RAIL FENCE DETAIL
N.T.S.

INDEX OF BRIDGE SHEETS
SHEET S23 OF S29
DWG WALL PROF DEF

Copyright © 2003 Cemcon, Ltd. All rights reserved.

PREPARED FOR:
WHEATON PARK DISTRICT
666 S. MAIN STREET
WHEATON, ILLINOIS 60187

PREPARED BY:
CEMCON, Ltd.
Consulting Engineers, Land Surveyors & Planners
2280 White Oak Circle, Suite 100
Aurora, Illinois 60504-9675
Ph: 630.862.2100 Fax: 630.862.2199
E-Mail: cadd@cemcon.com Website: www.cemcon.com

REVISIONS

NO.	DATE	DESCRIPTION	NO.	DATE	DESCRIPTION

MSE WALLS D, E & F

PEDESTRIAN/BICYCLE BRIDGE OVER UNION PACIFIC RAILROAD

FILE NAME: WALLPROF	DSGN. BY: JAC/KK	JOB NO.: 551.007	FLD. BK./PG.: ----	SHEET NO.
DISC. NUMBER: 551007	DRN. BY: MD	DATE: 12-21-04	SCALE: 1" = 5'H 5'V	36 of 54

F.A.U. RTE.	SECTION	COUNTY	TOTAL SHEETS	SHEET NO.
	94-P4031-00	DUPAGE	54	31

CONTRACT NO. 83560

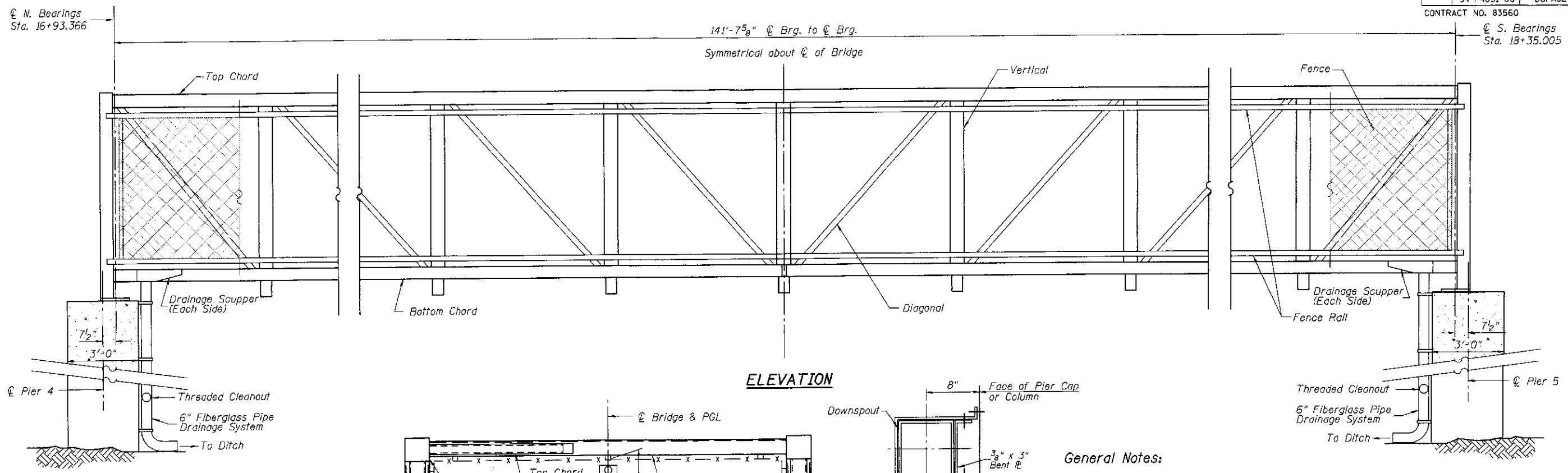

ELEVATION

TOP OF DECK ELEVATIONS AT ℄ BRIDGE

Location	Station	Theoretical Grade Elevation
CL. N. BRG. PIER 4	1693.366	771.051
	1703.366	771.296
	1713.366	771.509
	1723.366	771.688
	1733.366	771.835
	1743.366	771.948
	1753.366	772.029
	1763.366	772.077
	1773.366	772.091
	1783.366	772.073
	1793.366	772.021
	1803.366	771.937
	1813.366	771.819
	1823.366	771.669
	1833.366	771.486
CL. S. BRG. PIER 5	1835.005	771.452

Note: Theoretical Grade Elevations shall be adjusted for deadload deflections for use in the field.

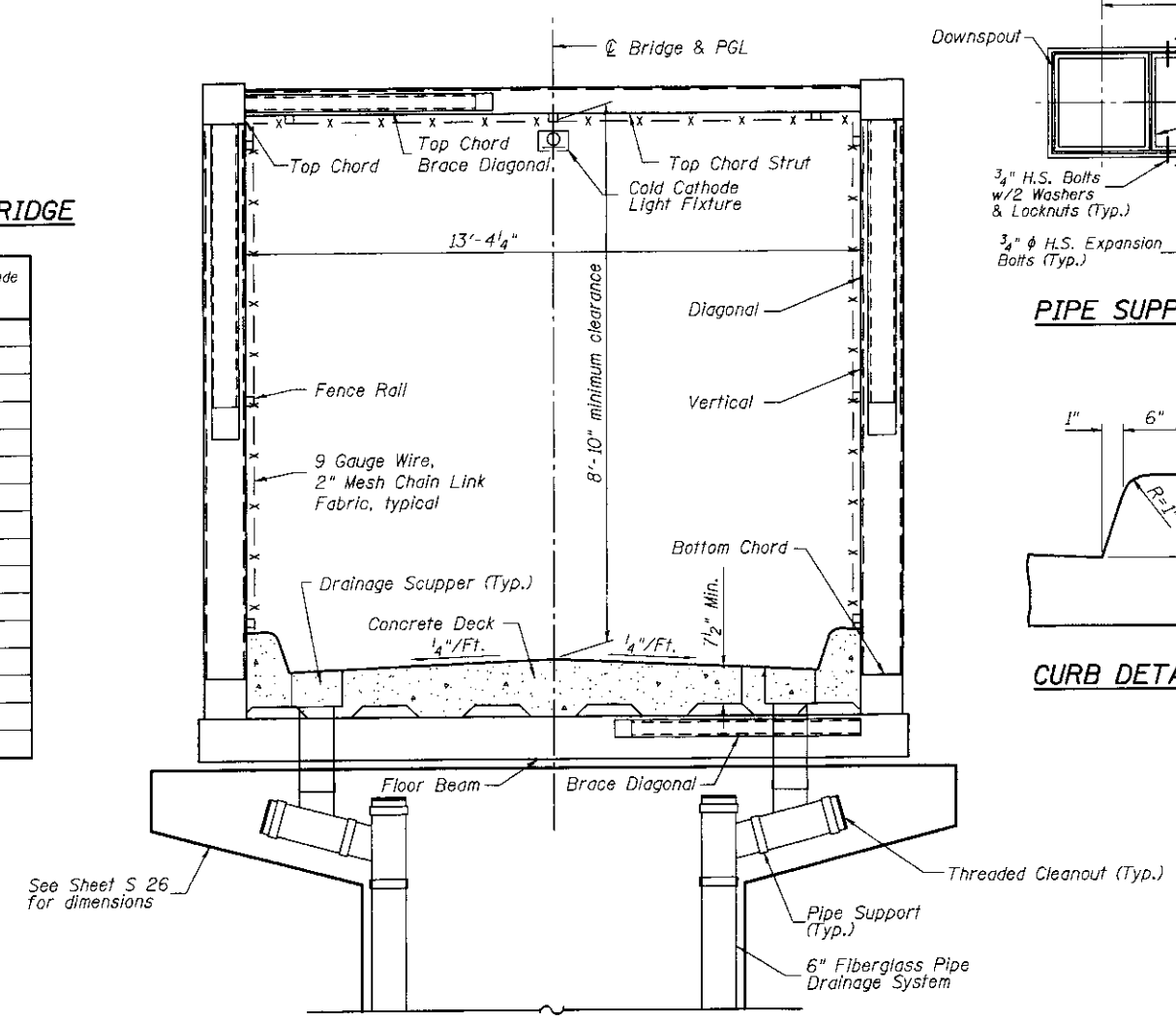

BRIDGE CROSS SECTION

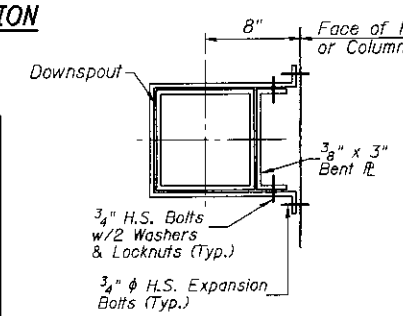

PIPE SUPPORT

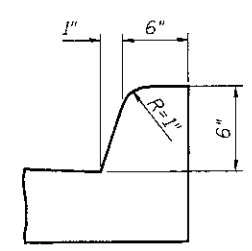

CURB DETAIL

General Notes:

1. Design Specifications: AASHTO Standard Specifications for Highway Bridges 2002 and AASHTO Guide Specifications for Design of Pedestrian Bridges, August 1997. IDOT Guide Bridge Special Provision "Pedestrian Truss Superstructure" except as noted on plans.
2. The work included under Pedestrian Truss Superstructure shall consist of furnishing, fabricating, transporting, erecting, painting as specified, steel decking, concrete, bearings, anchor bolts, wire mesh fence and attachments, and any other item of work to complete the work.
3. Before fabrication, the Contractor shall submit structural calculations and shop drawings signed and stamped by an Illinois registered Structural Engineer to the Engineer for review and approval, as per Standard Specifications, Section 505.
4. Bridge shall be fabricated from high strength, low alloy, atmospheric corrosion resistant "Weathering Steel". Structural steel shall conform to the requirements of AASHTO M270 Grade 50W.
5. Any reference to "Standard" throughout these plans or "Special Provisions" shall be interpreted to be IDOT "Standard Specifications for Road and Bridge Construction", adopted January 1, 2002, and IDOT "Supplemental Specifications and Recurring Special Provisions", adopted January 1, 2003.
6. All structural steel shall be cleaned as specified in the Special Provisions for "Surface Preparation and Painting Requirements for Weathering Steel."
7. The open area at top corners between bridge cross section and bridge fence railing shall be coverd with mesh chain link fabric at each end.
8. For other notes, see Sheets S2 and S11

Railroad Construction Notes:

1. For bridge construction any temporary at-grade construction crossing will not be permitted.
2. Minimum temporary construction clearances of 21 ft., vertical above top of rail and 12 ft. horizontal clearance from centerline of nearest track shall be required.
3. The contractor must submit a girder erection plan for the span over the tracks that will not interrupt train traffic.
4. Work windows will be available between 9:00 AM. - 3:30 PM., Construction activities cannot take precedence over train operations and all work within 25 ft. of any track must stop when a train passes. Work windows will also be available on weekends
5. Railroad flagman must be physically present before any work can commence within 25 ft. of the nearest track. For flagging requests call Alice at (312) 496-4738 at least 48 hours before date needed.

Notes:

1. The Pay Item "Drainage System" shall include providing and installing 6" fiberglass pipe, L's, T's, Reducer Elbows, Cleanouts, Inserts, Anchors, Hangers, Clamps, Concrete Pads and all other items neccessary to complete the underdeck drainage system.
2. Fiberglass pipe shall conform to ASTM D2995 with short time rupture strength hoop tensile stress of 30,000 p.s.i. minimum.

BILL OF MATERIAL

Item	Unit	Quantity
Pedestrian Truss Superstructure	Sq. Ft.	1,910
Drainage Scupper	Each	4
Drainage System	L. Sum	1

INDEX OF BRIDGE SHEETS
SHEET S18 OF S29

Copyright © 2003 Cemcon, Ltd. All rights reserved.

PREPARED FOR:
WHEATON PARK DISTRICT
666 S. MAIN STREET
WHEATON, ILLINOIS 60187

PREPARED BY:
CEMCON, Ltd.
Consulting Engineers, Land Surveyors & Planners
2280 White Oak Circle, Suite 100
Aurora, Illinois 60504-9675
Ph: 630.862.2100 Fax: 630.862.2199
E-Mail: cadd@cemcon.com Website: www.cemcon.com

REVISIONS

NO.	DATE	DESCRIPTION	NO.	DATE	DESCRIPTION

PEDESTRAIN TRUSS SUPERSTRUCTURE

PEDESTRIAN/BICYCLE PATH BRIDGE OVER UNION PACIFIC RAILROAD

FILE NAME: PREFAB	DSGN. BY: MMH	JOB NO.: 551.007	FLD. BK./PG.: -----
DISC. NUMBER: 551007	DRN. BY: RDS	DATE: 12-21-04	SCALE: ----

SHEET NO. 31 of 54

10-28-03 I:\SDSKPROJ\551007\DGN\PREFAB.DGN