ROUTE NO.	SECTION	COUNTY	TOTAL SHEETS	SHEET NO.
FAP 0525	*	WINNEBAGO	156	141
PENDING CONT. NO. 7	ILLINOIS	PROJECT NO.		

SHEET NO. 35
50 SHEETS

* 02-00518-00-BR

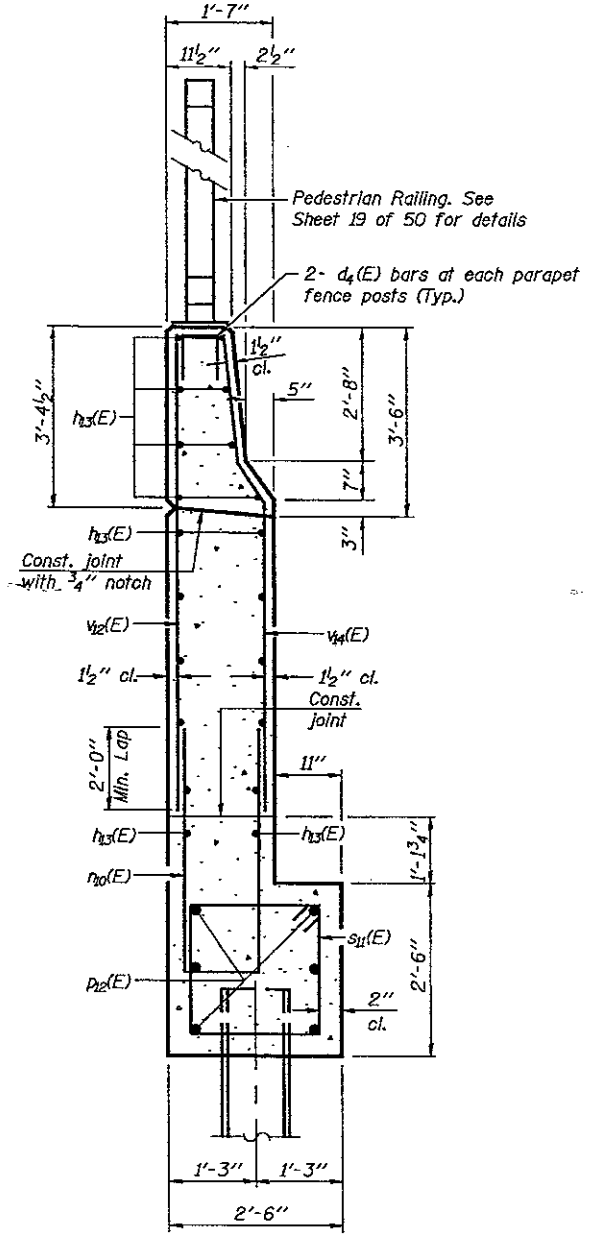

SECTION A-A

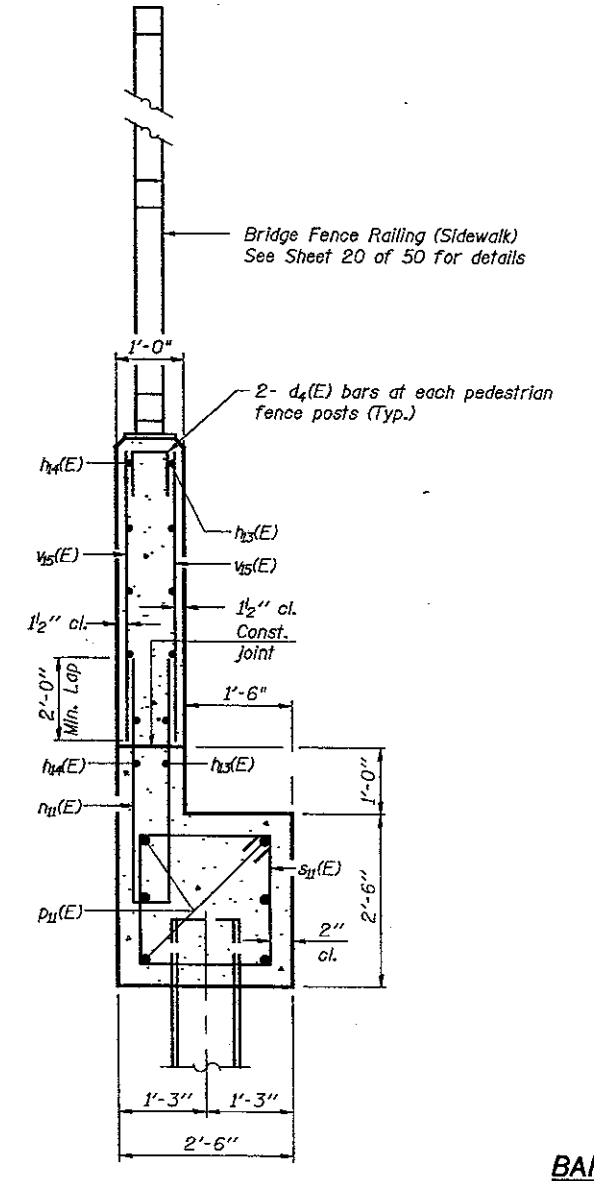

SECTION C-C

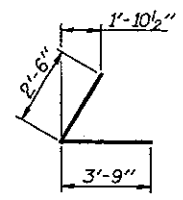

BAR $h_{11}(E)$

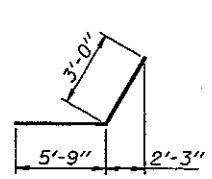

BAR $h_{12}(E)$

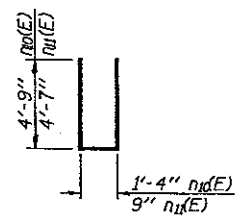

BAR $n_{10}(E)$ & $n_{11}(E)$

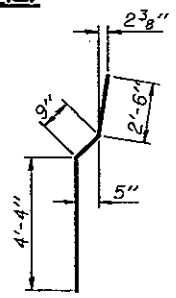

BAR $v_{14}(E)$

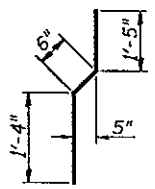

BAR $v_{11}(E)$

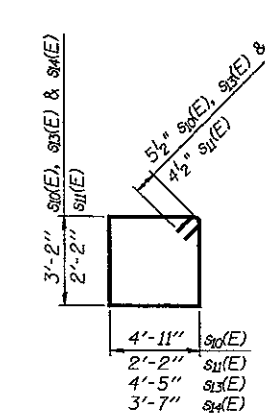

BARS $s_{10}(E)$, $s_{11}(E)$, $s_{13}(E)$ & $s_{14}(E)$

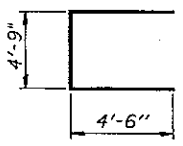

BAR $u_{10}(E)$

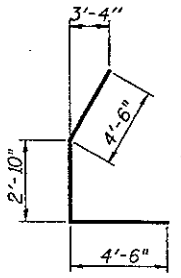

BAR $u_{11}(E)$

EAST ABUTMENT BILL OF MATERIAL

Bar	No.	Size	Length	Shape
$d_4(E)$	12	#4	2'-1"	
$h_{10}(E)$	18	#5	26'-8"	
$h_{11}(E)$	10	#5	6'-3"	
$h_{12}(E)$	10	#5	8'-9"	
$h_{13}(E)$	26	#4	13'-9"	
$h_{14}(E)$	6	#4	14'-10"	
$h_{15}(E)$	8	#6	26'-11"	
$n_{10}(E)$	15	#6	10'-10"	
$n_{11}(E)$	20	#6	9'-11"	
$p_{10}(E)$	24	#7	28'-8"	
$p_{11}(E)$	6	#7	14'-9"	
$p_{12}(E)$	6	#7	16'-3"	
$s_{10}(E)$	50	#5	17'-1"	
$s_{11}(E)$	26	#4	9'-5"	
$s_{12}(E)$	Not Used			
$s_{13}(E)$	1	#5	16'-1"	
$s_{14}(E)$	1	#5	14'-5"	
$u_{10}(E)$	4	#6	13'-9"	
$u_{11}(E)$	4	#6	11'-10"	
$v_{10}(E)$	52	#5	2'-6"	
$v_{11}(E)$	52	#4	3'-3"	
$v_{12}(E)$	15	#6	7'-6"	
$v_{13}(E)$	104	#4	5'-0"	
$v_{14}(E)$	15	#6	7'-7"	
$v_{15}(E)$	41	#6	4'-2"	
Structure Excavation		Cu. Yd.	64.5	
Concrete Structures		Cu. Yd.	61.6	
Concrete Encasement		Cu. Yd.	3.9	
Reinforcement Bars, Epoxy Coated		Pound	6060	
Furnishing Steel Piles, HP12x53		Foot	570	
Driving Piles		Foot	570	
Test Piles Steel, HP12x53		Each	1	
Pile Shoes		Each	11	
Concrete Sealer		Sq. Ft.	174	
Porous Granular Embankment		Cu.Yd.	89.3	
Anchor Bolts, 1"		Each	10	

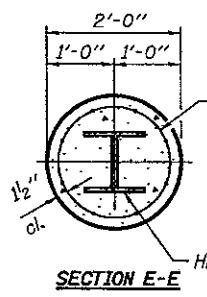

SECTION E-E

Welded wire fabric 6 x 6-W4.0 x W4.0 weighing 58#/100 sq. ft. The cost of Excavation, Concrete Encasement and Reinforcement is included with Concrete Encasement. Forms for Encasement may be omitted when soil conditions permit.

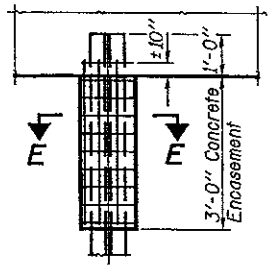

PILE ENCASEMENT DETAIL

NOTES

Reinforcement bars designated (E) shall be epoxy coated.
Work this Sheet with Sheets 33 & 34 of 50.
See Sheet 16 of 50 for Bar $d_4(E)$ configuration.

Corporate License Number 184-001-084

EAST ABUTMENT DETAILS

WESTBOUND HARRISON AVENUE
OVER UP & CC&P RAILROAD
F.A.P. ROUTE 0525
SECTION 02-00518-00-BR
ROCKFORD, ILLINOIS
STATION 95+25.35
STRUCTURE NO. 101-6109

© Copyright Hanson Professional Services Inc. 2006

HANSON

JOB NO. 03R1751

DATE 8/14/06

LAYOUT	SMK	7/1/06
DRAWN	MDM/AKR	8/11/06
REVIEWED	AKR	8/11/06

10/6/05 AM
I:\03Jobs\03r1751\Struct\Sheet\West Bound\S-035-MDB-EastAbutBar3.dgn

ROUTE NO.	SECTION	COUNTY	TOTAL SHEETS	SHEET NO.
FAP 8525	•	WINNEBAGO	156	142
FED. ROAD DIST. NO. 7	ILLINOIS	FED. AID PROJECT		

• 02-00518-00-BR

SHEET NO. 36
50 SHEETS

NOTES

Space Reinforcement in cap to miss anchor bolts.
Pour steps monolithically with cap.
Work this sheet with Sheet 37 of 50.
Reinforcement Bars designated (E) shall be epoxy coated.
Bar indicated thus 1x2 - #5 etc. indicates 1 line of bar with 2 lengths per line.

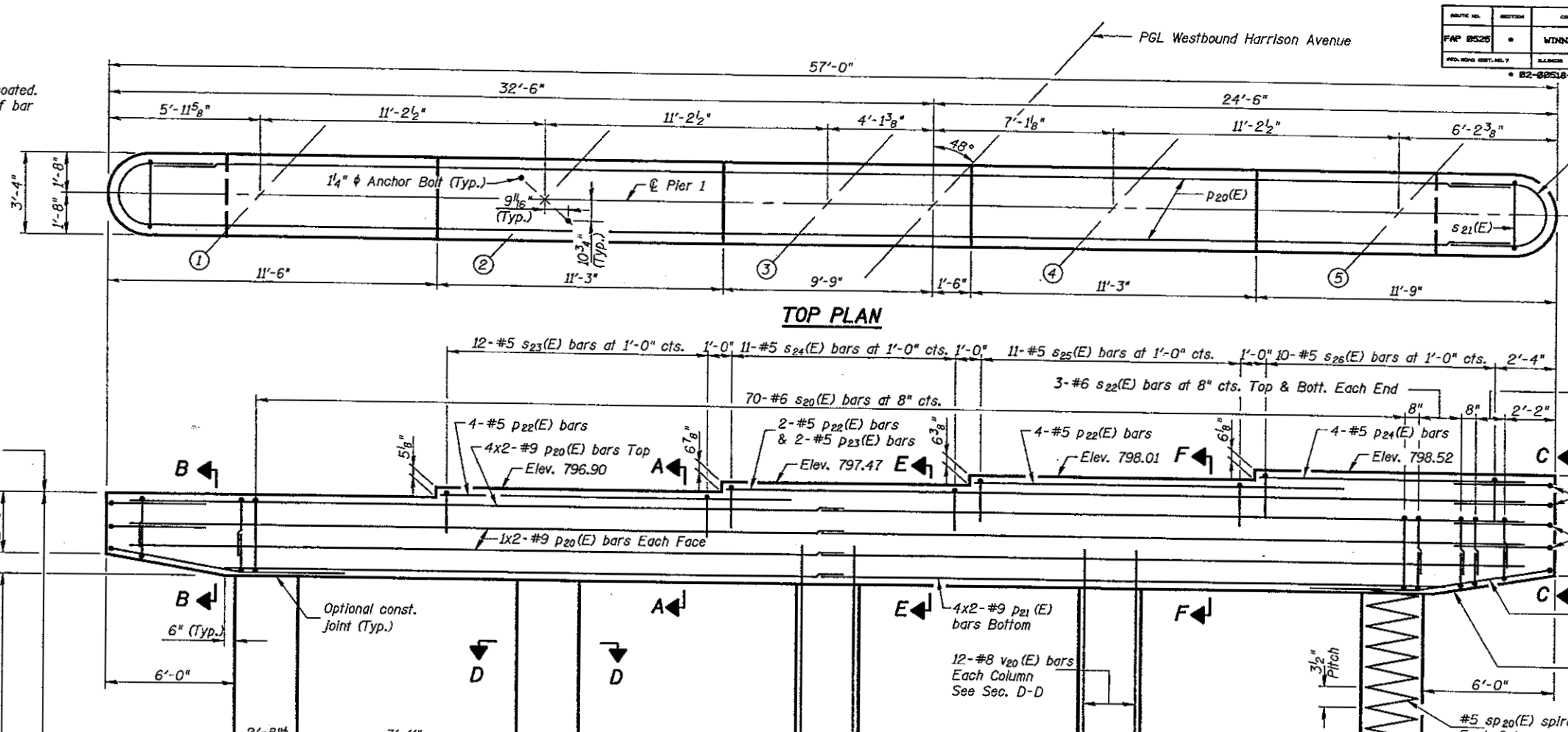

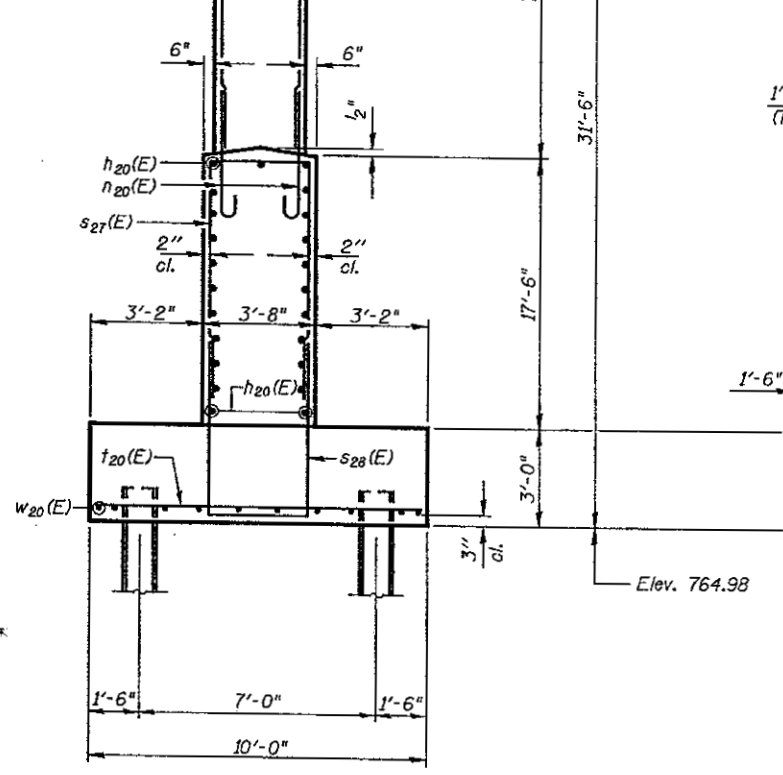

END VIEW

ELEVATION
(Looking Northeast)

MINIMUM BAR LAP

HORIZONTAL

#5 - 2'-2" (Bottom of Footing)
#5 - 3'-0"
#9 - 8'-1"

Corporate License Number 184-001-084

PIER 1

WESTBOUND HARRISON AVENUE
OVER UP & CC&P RAILROAD
F.A.P. ROUTE 0525
SECTION 02-00518-00-BR
ROCKFORD, ILLINOIS
STATION 95+25.35
STRUCTURE NO. 101-6109

© Copyright Hanson Professional Services Inc. 2006

HANSON

JOB NO. 03R1751

DATE 8/14/06

LAYOUT	JRR	03/01/06
DRAWN	MGM/JRR	07/17/06
REVIEWED	R.L.N.	08/02/06

10x7.5 IN
104-4236.DWF IM
I:\03Jobs\03R1751\Struct\Sheet Bound\S-036-W19-Pier1.dgn

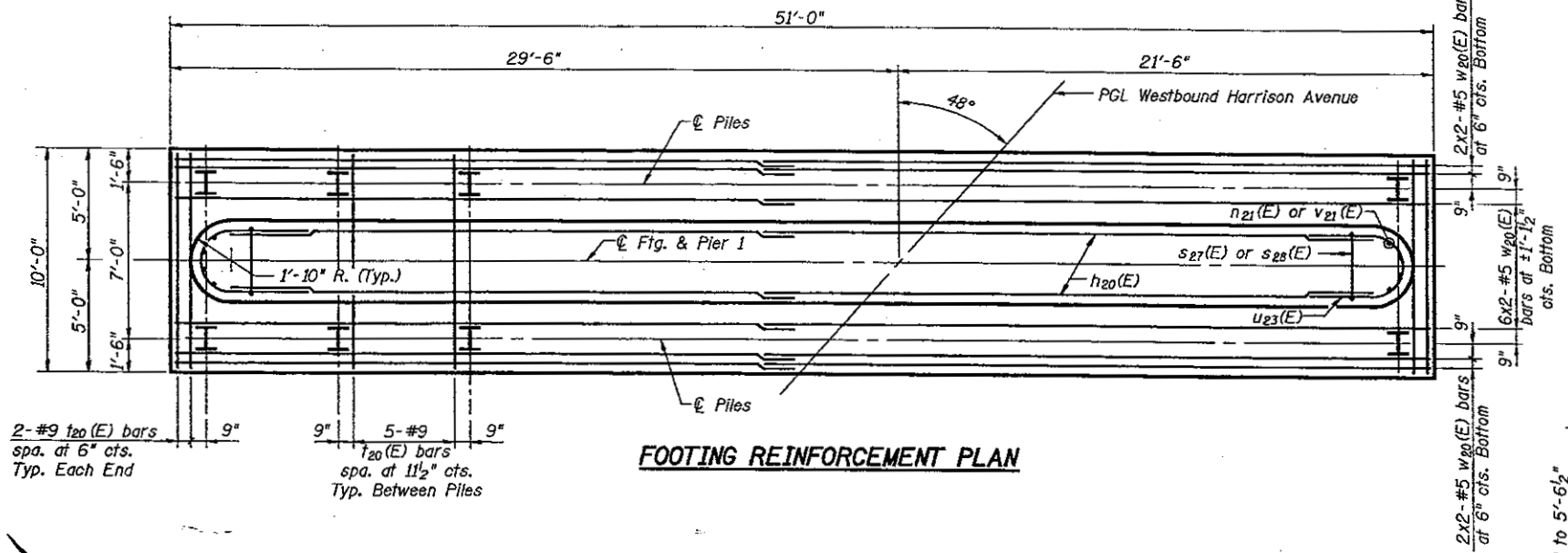

FOOTING REINFORCEMENT PLAN

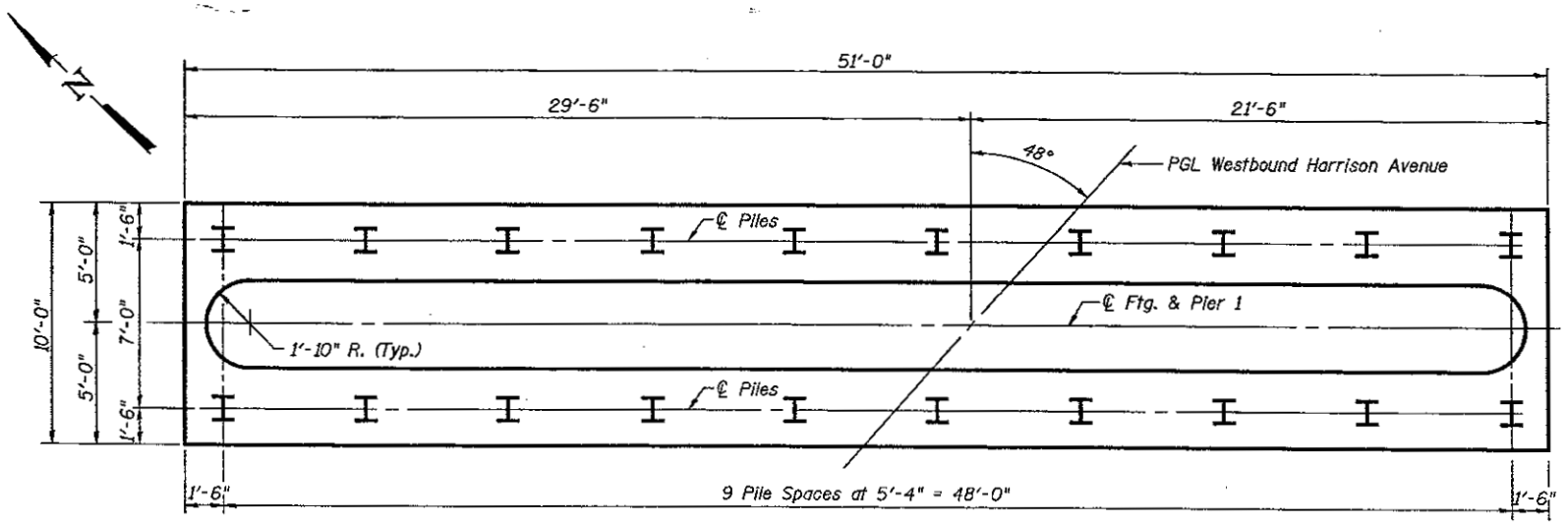

FOOTING PILE PLAN

PILE DATA

Type & Size: HP 12x53 w/ Pile Shoes
Nominal Required Bearing : 420 Kips
Allowable Resistance Available : 140 Kips
Est. Length: 18'
No. Req'd: 19 + 1 Test Pile

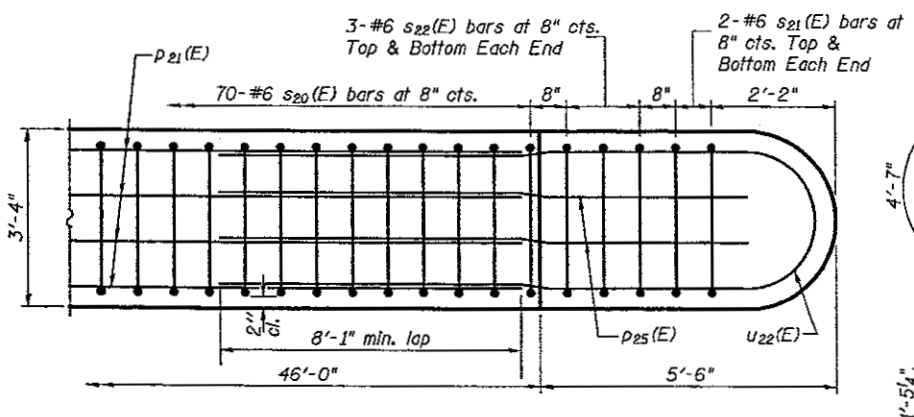

DETAIL A
REFLECTED UNDERSIDE PLAN OF PIER CAP END

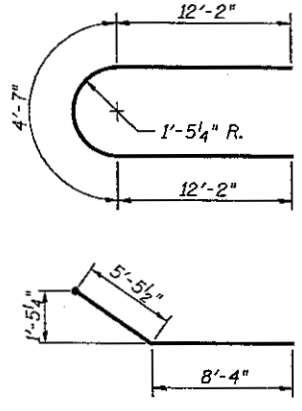

BAR u_{22}(E)

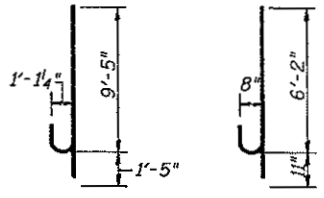

BAR n_{21}(E) BAR n_{20}(E)

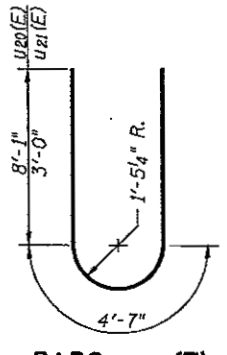

BARS u_{20}(E) & u_{21}(E)

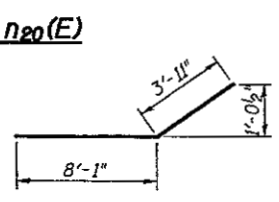

BAR p_{25}(E)

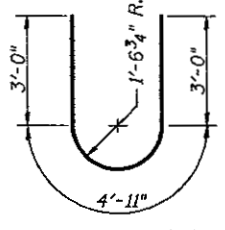

BAR u_{23}(E)

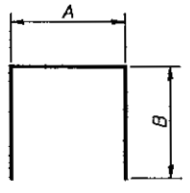

BARS s_{21}(E) thru s_{28}(E)

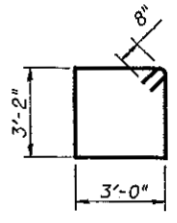

BAR s_{20}(E)

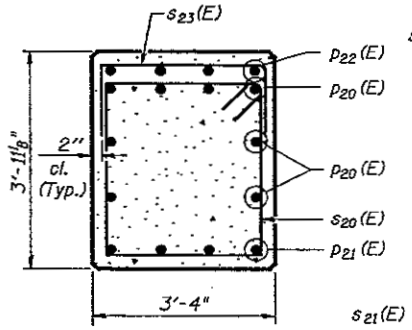

SECTION A-A

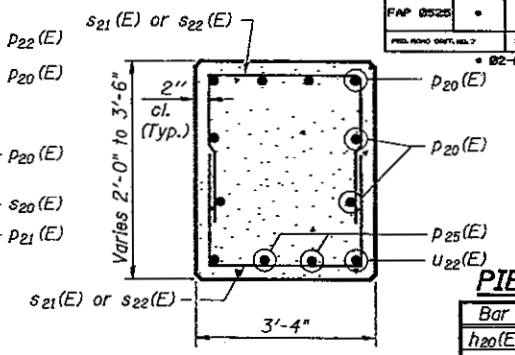

SECTION B-B

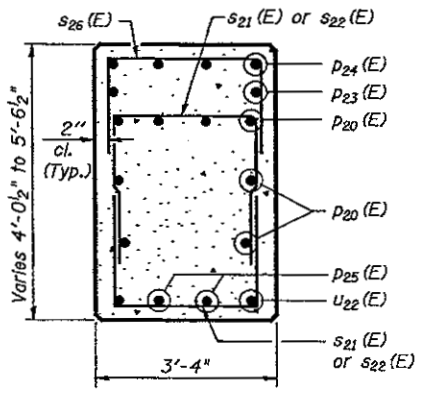

SECTION C-C

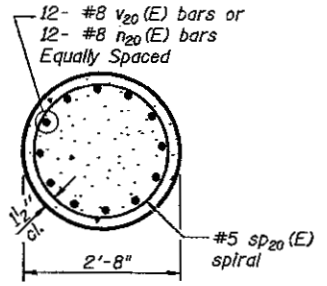

SECTION D-D

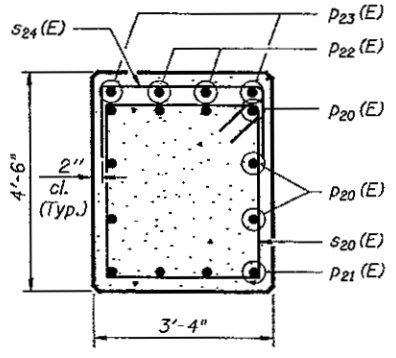

SECTION E-E

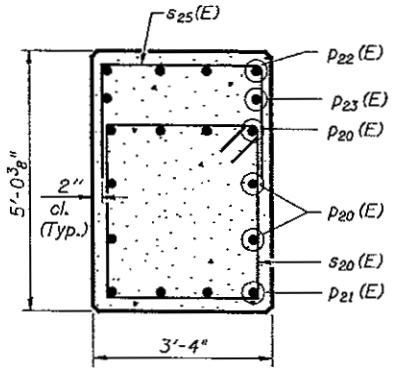

SECTION F-F

PIER 1 BILL OF MATERIAL

Bar	No.	Size	Length	Shape
h_{20}(E)	54	#5	23'-8"	
n_{20}(E)	60	#8	7'-1"	
n_{21}(E)	8	#10	10'-10"	
p_{20}(E)	16	#9	30'-11"	
p_{21}(E)	8	#9	27'-1"	
p_{22}(E)	10	#5	14'-3"	
p_{23}(E)	2	#5	32'-5"	
p_{24}(E)	4	#5	9'-11"	
p_{25}(E)	4	#9	12'-0"	
s_{20}(E)	70	#6	13'-8"	
s_{21}(E)	8	#6	7'-6"	
s_{22}(E)	12	#6	8'-0"	
s_{23}(E)	12	#5	7'-4"	
s_{24}(E)	11	#5	8'-4"	
s_{25}(E)	11	#5	9'-6"	
s_{26}(E)	10	#5	10'-6"	
s_{27}(E)	45	#10	37'-8"	
s_{28}(E)	45	#10	23'-8"	
* sp_{20}(E)	5	#5	7'-8"	
t_{20}(E)	49	#9	9'-8"	
u_{20}(E)	4	#9	20'-9"	
u_{21}(E)	2	#5	10'-7"	
u_{22}(E)	2	#9	28'-11"	
u_{23}(E)	26	#5	10'-11"	
v_{20}(E)	60	#8	9'-6"	
v_{21}(E)	8	#10	17'-2"	
w_{20}(E)	20	#5	26'-5"	

Concrete Structures	Cu. Yd.	207.1
Reinforcement Bars, Epoxy Coated	Pound	25,840
Structure Excavation	Cu. Yd.	474.3
Furnishing Steel Piles, HP 12x53	Foot	342
Driving Piles	Foot	342
Pile Shoes	Each	20
Test Pile Steel HP 12x53	Each	1
Anchor Bolts, 1¼"	Each	10

NOTES

Work this sheet with Sheet 36 of 50.
Reinforcement Bars designated (E) shall be epoxy coated.
Bar indicated thus 1x2 - #5 etc. indicates 1 line of bar with 2 lengths per line.
* Length is spiral height.

Corporate License Number 184-001-084

A & B DIMENSIONS

Bar	A	B
s_{21}(E)	3'-0"	2'-3"
s_{22}(E)	3'-0"	2'-6"
s_{23}(E)	3'-0"	2'-2"
s_{24}(E)	3'-0"	2'-8"
s_{25}(E)	3'-0"	3'-3"
s_{26}(E)	3'-0"	3'-9"
s_{27}(E)	3'-4"	17'-2"
s_{28}(E)	3'-4"	10'-2"

MINIMUM BAR LAP

HORIZONTAL

#5 - 2'-2" (Bottom of Footing)
#5 - 3'-0"
#9 - 8'-1"

ROUTE NO.	SECTION	COUNTY	TOTAL SHEETS	SHEET NO.
FAP 0525	*	WINNEBAGO	156	143

PROJ. ROAD CONT. NO. 7 — F.A. ROUTE — PROJ. AUTH. FED. AID PROJECT

* 02-00518-00-BR

SHEET NO. 37
50 SHEETS

LAYOUT	JKR	03/01/06
DRAWN	MDM/JKR	07/11/06
REVIEWED	FLN	08/02/06

IDOT/DES AM
ID:04-AB206.IDT AM
IN:03 Feb 03:17:51 \Struct Steel\West Bound\S-037-4118-Pier1Det.dgn

PIER 1 DETAILS

WESTBOUND HARRISON AVENUE
OVER UP & CC&P RAILROAD
F.A.P. ROUTE 0525
SECTION 02-00518-00-BR
ROCKFORD, ILLINOIS
STATION 95+25.35
STRUCTURE NO. 101-6109

© Copyright Hanson Professional Services Inc. 2006

HANSON

JOB NO. 03R1751

DATE 8/14/06

ROUTE NO.	SECTION	COUNTY	TOTAL SHEETS	SHEET NO.
FAP 0525	-	WINNEBAGO	156	144

SHEET NO. 38
50 SHEETS

* 02-00518-00-BR

NOTES

Space Reinforcement in cap to miss anchor bolts
Pour steps monolithically with cap.
Work this sheet with Sheet 39 of 50.
Reinforcement Bars designated (E) shall be epoxy coated.
Bar indicated thus 1x2 - #5 etc. indicates 1 line of bar with 2 lengths per line.

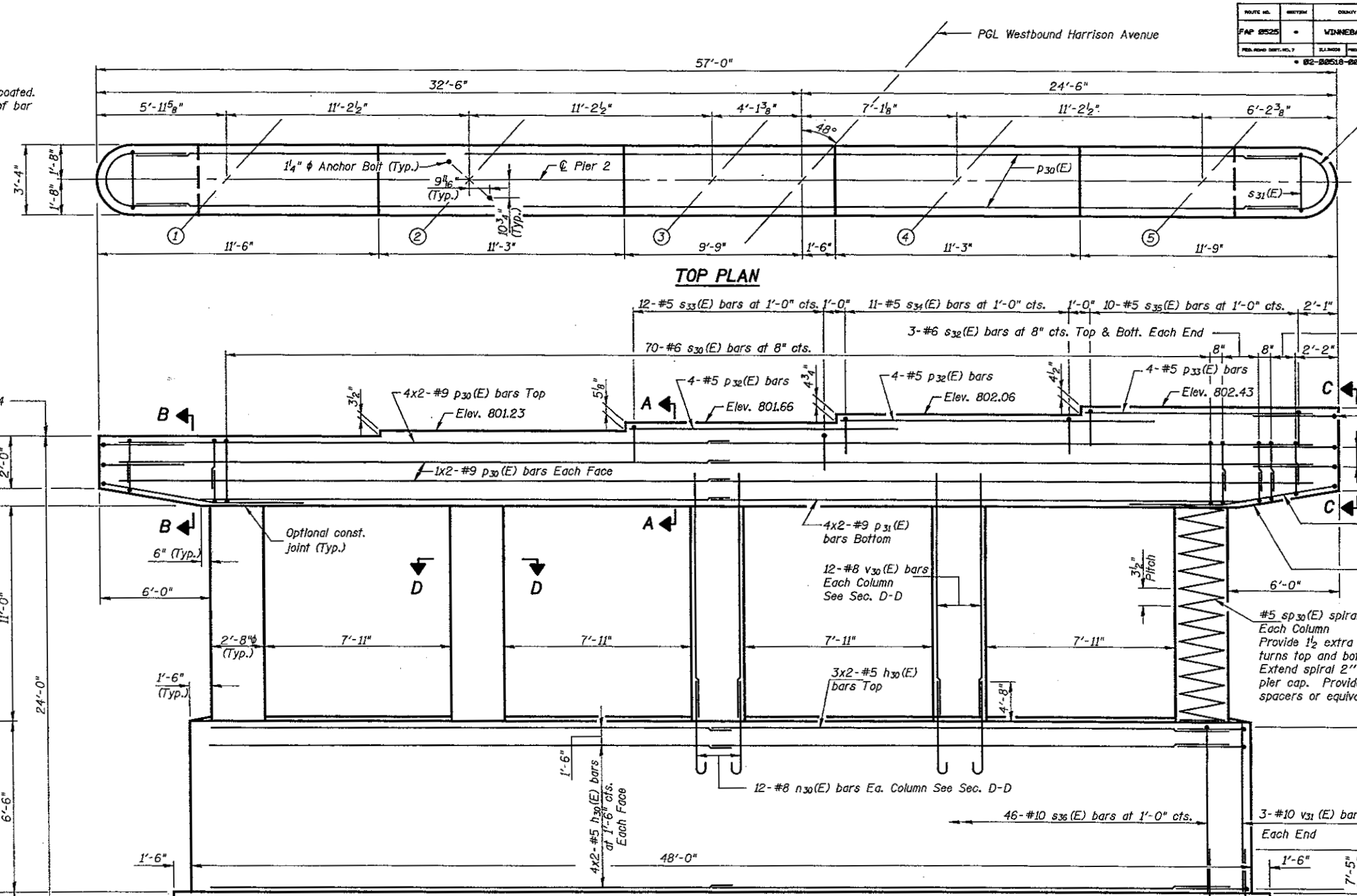

END VIEW

ELEVATION
(Looking Northeast)

MINIMUM BAR LAP

HORIZONTAL

#5 - 2'-2" (Bottom of Footing)
#5 - 3'-0"
#9 - 8'-1"

Corporate License Number 184-001-084

PIER 2

WESTBOUND HARRISON AVENUE
OVER UP & CC&P RAILROAD
F.A.P. ROUTE 0525
SECTION 02-00518-00-BR
ROCKFORD, ILLINOIS
STATION 95+25.35
STRUCTURE NO. 101-6109

© Copyright Hanson Professional Services Inc. 2006

HANSON

JOB NO. 03R1751
DATE 8/14/06

LAYOUT	JKR	03/01/06
DRAWN	MGW/JKR	07/27/06
REVIEWED	FJN	08/02/06

10ST-42 AN
10DA5208.DNT AN
i:\03Jobs\03r17\Structure\Sheet\West Bound\S-0316-WB-Pier2.dgn

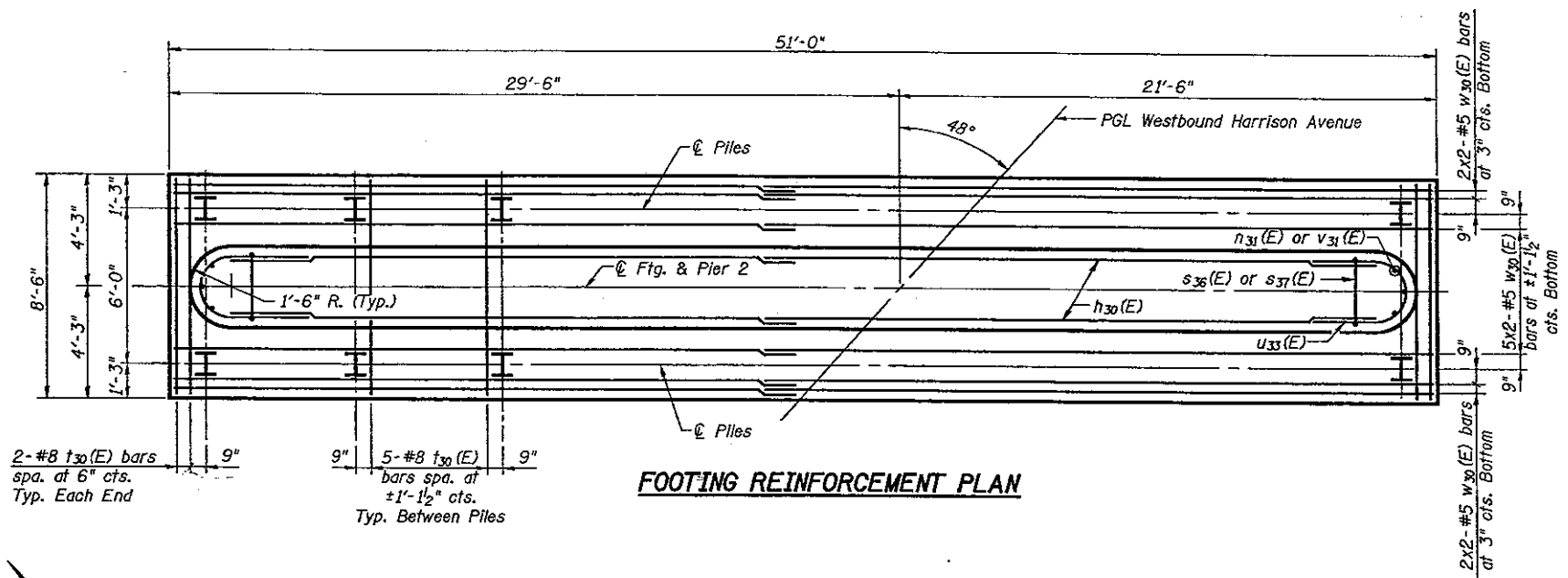

FOOTING REINFORCEMENT PLAN

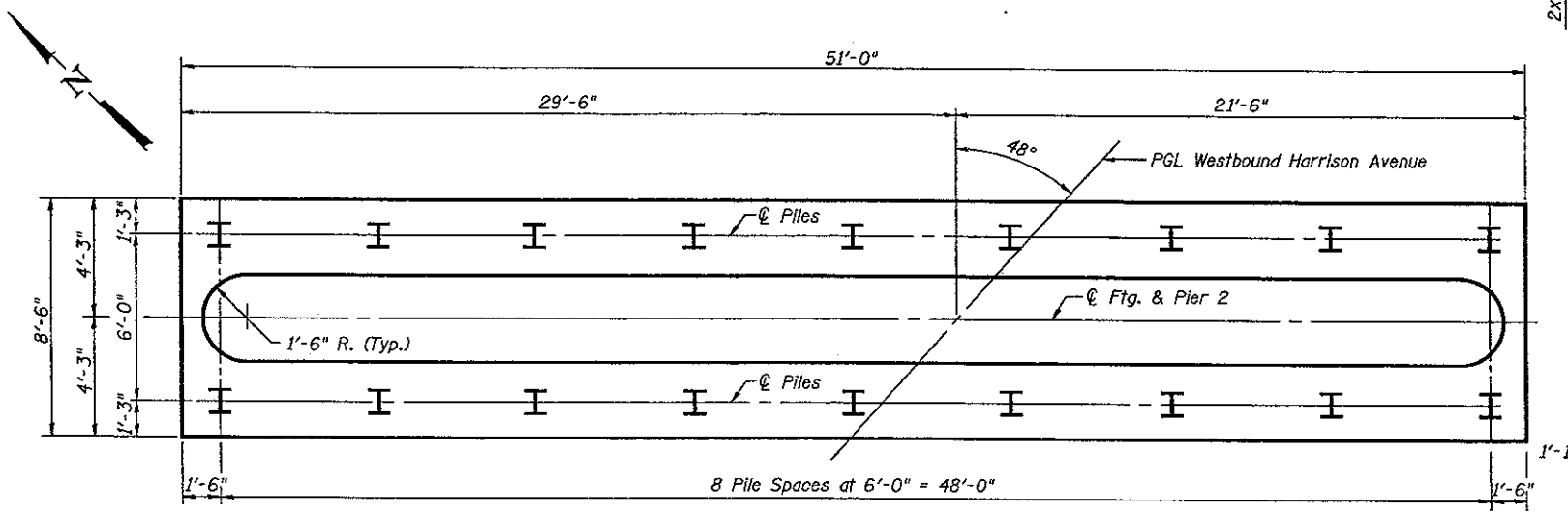

FOOTING PILE PLAN

PILE DATA

Type & Type: HP 12x53 w/ Pile Shoes
Nominal Required Bearing : 420 Kips
Allowable Resistance Available : 140 Kips
Est. Length: 19'
No. Req'd: 17 + 1 Test Pile

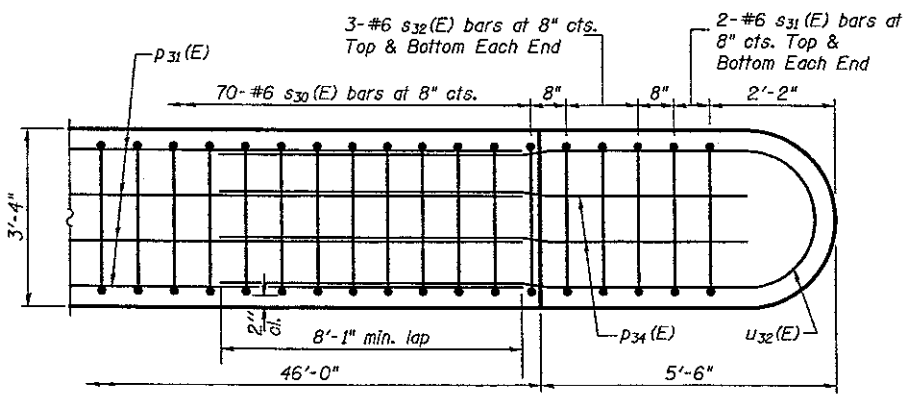

DETAIL A
REFLECTED UNDERSIDE PLAN OF PIER CAP END

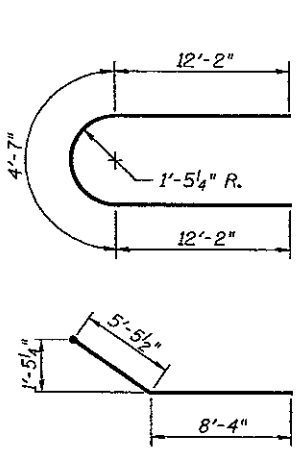

BAR s_{30}(E)

BAR u_{32}(E)

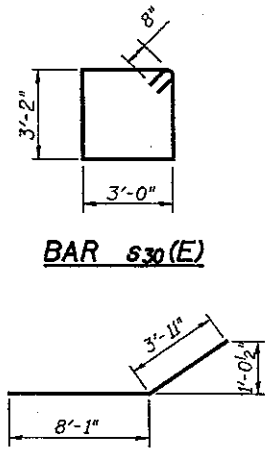

BAR s_{30}(E)

BAR p_{34}(E)

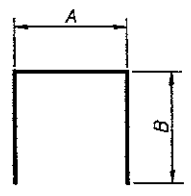

BARS s_{31}(E) thru s_{37}(E)

A & B DIMENSIONS

Bar	A	B
s_{31}(E)	3'-0"	2'-3"
s_{32}(E)	3'-0"	2'-6"
s_{33}(E)	3'-0"	2'-5"
s_{34}(E)	3'-0"	2'-10"
s_{35}(E)	3'-0"	3'-2"
s_{36}(E)	2'-8"	6'-2"
s_{37}(E)	2'-8"	9'-1"

MINIMUM BAR LAP

HORIZONTAL

#5 - 2'-2" (Bottom of Footing)
#5 - 3'-0"
#9 - 8'-1"

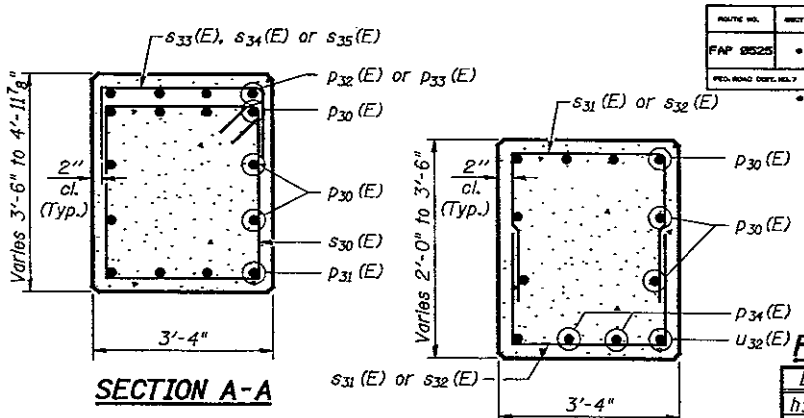

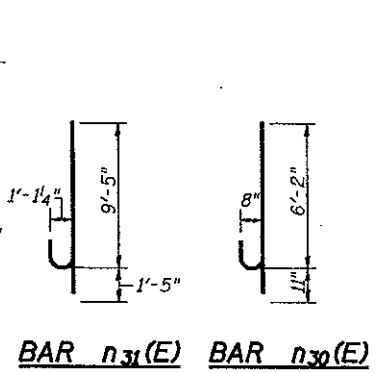

BAR n_{31}(E)

BAR n_{30}(E)

BARS u_{30}(E) & u_{31}(E)

BAR u_{33}(E)

PIER 2 BILL OF MATERIAL

Bar	No.	Size	Length	Shape
h_{30}(E)	22	#5	24'-0"	
n_{30}(E)	60	#8	7'-1"	
n_{31}(E)	6	#10	10'-10"	
p_{30}(E)	16	#9	30'-11"	
p_{31}(E)	8	#9	27'-1"	
p_{32}(E)	8	#5	14'-3"	
p_{33}(E)	4	#5	9'-11"	
p_{34}(E)	4	#9	12'-0"	
s_{30}(E)	70	#6	13'-8"	
s_{31}(E)	8	#6	7'-6"	
s_{32}(E)	12	#6	8'-0"	
s_{33}(E)	12	#5	7'-10"	
s_{34}(E)	11	#5	8'-8"	
s_{35}(E)	10	#5	9'-4"	
s_{36}(E)	46	#10	15'-0"	
s_{37}(E)	46	#10	20'-10"	
* sp_{30}(E)	5	#5	11'-2"	
t_{30}(E)	44	#8	8'-2"	
u_{30}(E)	4	#9	20'-9"	
u_{31}(E)	1	#5	10'-7"	
u_{32}(E)	2	#9	28'-11"	
u_{33}(E)	10	#5	9'-11"	
v_{30}(E)	60	#8	13'-0"	
v_{31}(E)	6	#10	6'-2"	
w_{30}(E)	18	#5	26'-5"	
Concrete Structures		Cu. Yd.	122.2	
Reinforcement Bars, Epoxy Coated		Pound	19,660	
Structure Excavation		Cu. Yd.	251.6	
Furnishing Steel Piles, HP 12x53		Foot	323	
Driving Piles		Foot	323	
Pile Shoes		Each	18	
Test Pile Steel HP 12x53		Each	1	
Anchor Bolts, 1¼"		Each	10	

NOTES

Work this sheet with Sheet 38 of 50.
Reinforcement Bars designated (E) shall be epoxy coated.
Bar indicated thus 1x2 - #5 etc. indicates 1 line of bar with 2 lengths per line.
* Length is spiral height.

Corporate License Number 184-001-084

ROUTE NO.	SECTION	COUNTY	TOTAL SHEETS	SHEET NO.
FAP 0525	*	WINNEBAGO	156	145
FED. ROAD DIST. NO. 7	ILLINOIS	FED. AID PROJECT		

SHEET NO. 39
50 SHEETS
* 02-00518-00-BR

PIER 2 DETAILS

WESTBOUND HARRISON AVENUE
OVER UP & CC&P RAILROAD
F.A.P. ROUTE 0525
SECTION 02-00518-00-BR
ROCKFORD, ILLINOIS
STATION 95+25.35
STRUCTURE NO. 101-6109

© Copyright Hanson Professional Services Inc. 2006

HANSON

JOB NO. 03R1751

DATE 8/14/06

LAYOUT	JKR	03/01/06
DRAWN	MGW/JKR	07/11/06
REVIEWED	F.I.N.	08/02/06

10:58:00 AM
ID:04/26/2006, 10:18 AM
N:\03Jobs\03r1751\Struct\Sheet\West Bound\S-03-SHT-Pier2Det.dgn

ROUTE NO.	SECTION	COUNTY	TOTAL SHEETS	SHEET NO.
FAP 0525	•	WINNEBAGO	158	146

SHEET NO. 40
50 SHEETS

• 02-00518-00-BR

NOTES

Space Reinforcement in cap to miss anchor bolts.
Pour steps monolithically with cap.
Work this sheet with Sheet 41 of 50.
Reinforcement Bars designated (E) shall be epoxy coated.
Bar indicated thus 1x2 - #5 etc. indicates 1 line of bar with 2 lengths per line.
Pile studs shall be installed after piles are driven and cut off to proper elevation.

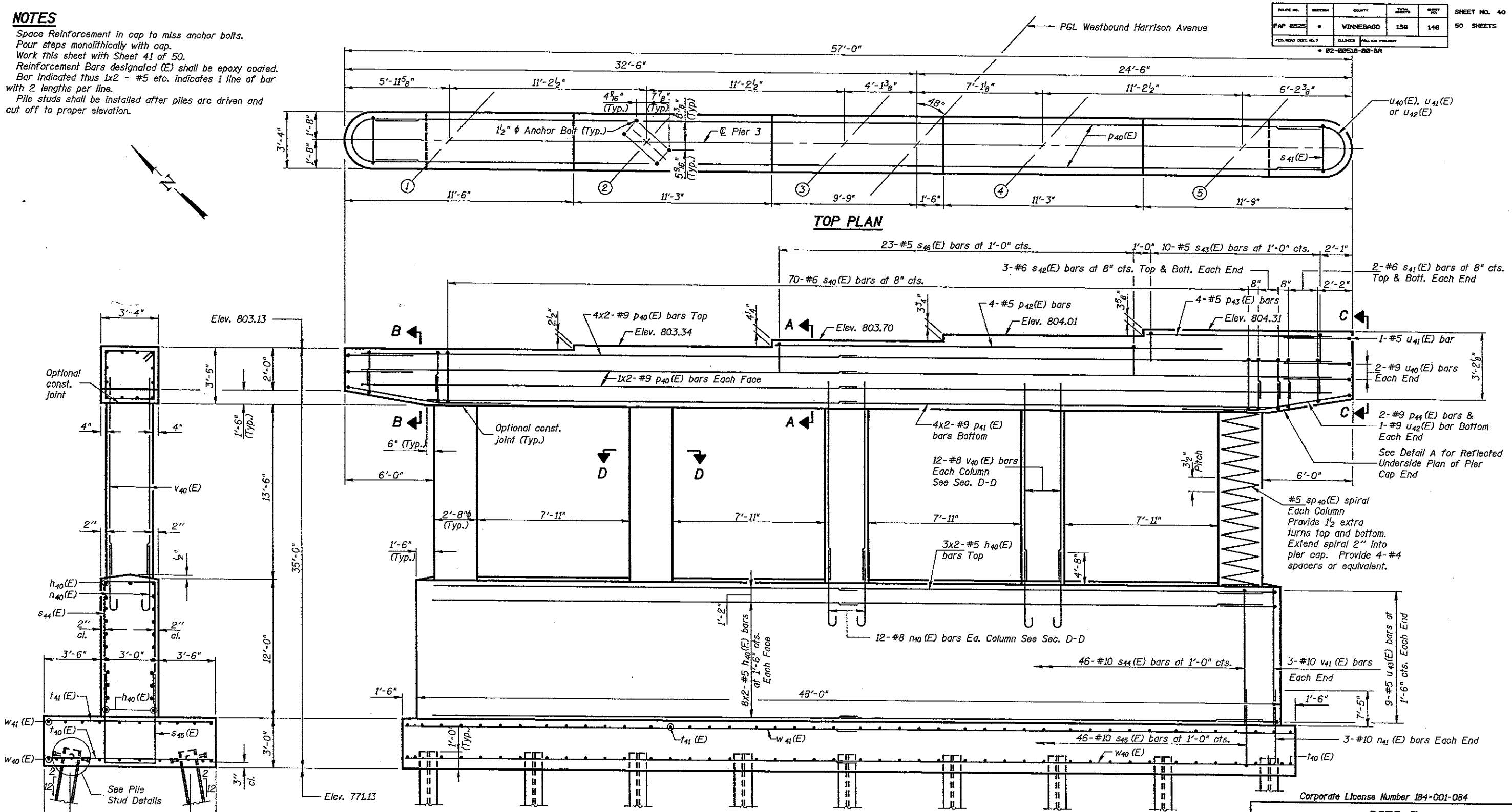

PILE STUD DETAILS

Provide 3/4" ϕ granular or solid flux filled headed studs automatically end welded to piling. Cost shall be included with Furnishing Steel Piles, HP 12x53.

MINIMUM BAR LAP

HORIZONTAL

#5 - 2'-2" (Bottom of Footing)
#5 - 3'-0"
#9 - 8'-1"

Corporate License Number 184-001-084

PIER 3

WESTBOUND HARRISON AVENUE
OVER UP & CC&P RAILROAD
F.A.P. ROUTE 0525
SECTION 02-00518-00-BR
ROCKFORD, ILLINOIS
STATION 95+25.35
STRUCTURE NO. 101-6109

© Copyright Hanson Professional Services Inc. 2006

HANSON

JOB NO. 03R1751
DATE 8/14/06

LAYOUT	JRR	03/01/06
DRAWN	MGM/JKR	07/17/06
REVIEWED	FLN	08/02/06

10/09/29 AM
10/09/2006 10:19 AM
I:\03\Jobs\03r1751\Struct\Sheet\West Bound\S-040-WB-Pier3.dgn

ROUTE NO.	SECTION	COUNTY	TOTAL SHEETS	SHEET NO.
FAP 0525	*	WINNEBAGO	156	147
FED. ROAD DIST. NO. 7	ILLINOIS	FED. AID PROJECT		

SHEET NO. 41
50 SHEETS

* 02-00518-00-BR

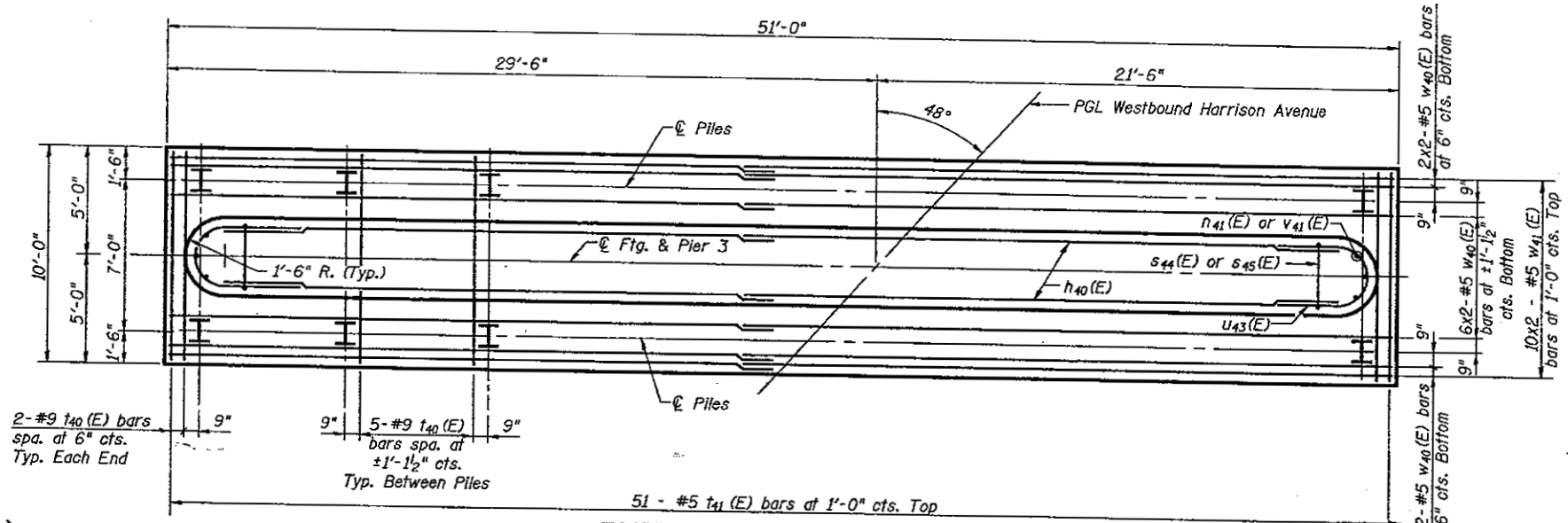

FOOTING REINFORCEMENT PLAN

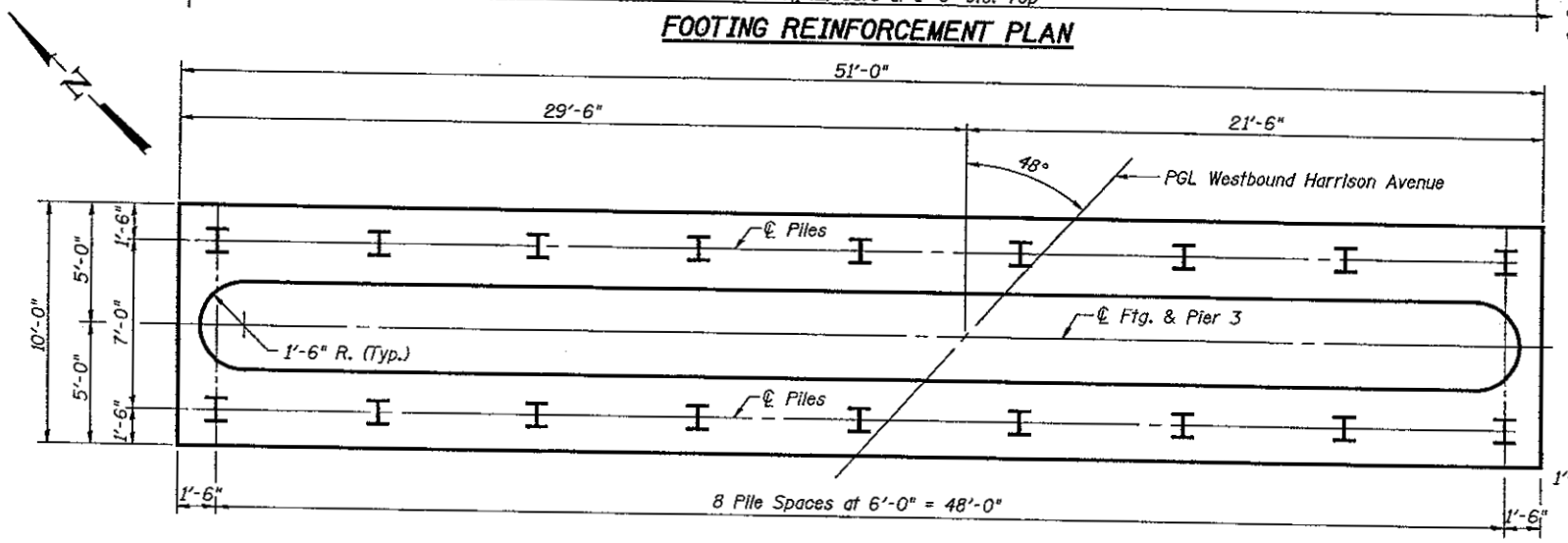

FOOTING PILE PLAN

PILE DATA

Type & Size: HP 12x53 w/ Pile Shoes
Nominal Required Bearing : 420 Kips
Allowable Resistance Available : 140 Kips
Est. Length: 20'
No. Req'd: 17 + 1 Test Pile

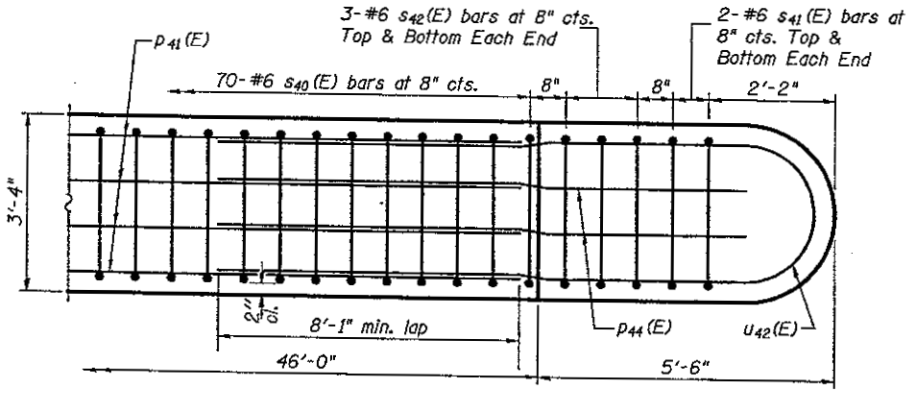

DETAIL A
REFLECTED UNDERSIDE PLAN OF PIER CAP END

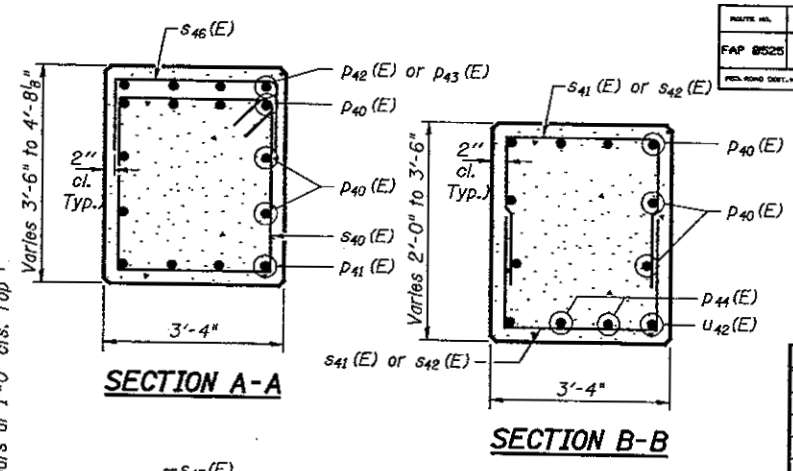

SECTION A-A

SECTION B-B

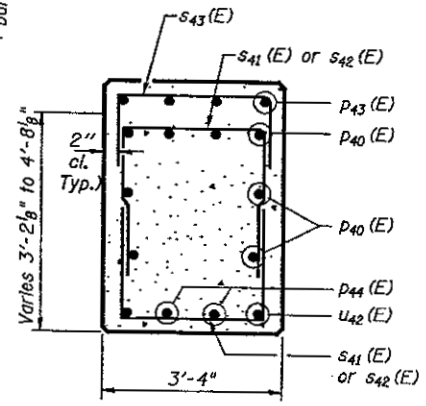

SECTION C-C

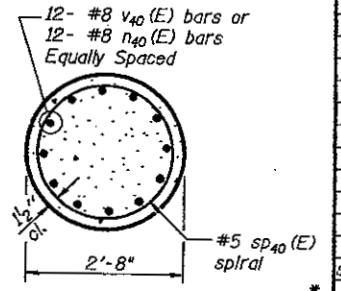

SECTION D-D

PIER 3 BILL OF MATERIAL

Bar	No.	Size	Length	Shape
h_{40}(E)	38	#5	24'-0"	
n_{40}(E)	60	#8	7'-1"	
n_{41}(E)	6	#10	10'-10"	
p_{40}(E)	16	#9	30'-11"	
p_{41}(E)	8	#9	27'-1"	
p_{42}(E)	4	#5	25'-6"	
p_{43}(E)	4	#5	9'-11"	
p_{44}(E)	4	#9	12'-0"	
s_{40}(E)	70	#6	13'-8"	
s_{41}(E)	8	#6	7'-6"	
s_{42}(E)	12	#6	8'-0"	
s_{43}(E)	10	#5	8'-10"	
s_{44}(E)	46	#10	26'-0"	
s_{45}(E)	46	#10	23'-0"	
s_{46}(E)	23	#5	7'-6"	
sp_{40}(E)	5	#5	13'-8"	
t_{40}(E)	44	#9	9'-8"	
t_{41}(E)	51	#5	9'-8"	
u_{40}(E)	4	#9	20'-9"	
u_{41}(E)	1	#5	10'-7"	
u_{42}(E)	2	#9	28'-11"	
u_{43}(E)	18	#5	9'-11"	
v_{40}(E)	60	#8	15'-6"	
v_{41}(E)	6	#10	11'-8"	
w_{40}(E)	20	#5	26'-5"	
w_{41}(E)	20	#5	26'-10"	
Concrete Structures		Cu. Yd.	161.2	
Reinforcement Bars, Epoxy Coated		Pound	25,200	
Structure Excavation		Cu. Yd.	495.8	
Furnishing Steel Piles, HP 12x53		Foot	340	
Driving Piles		Foot	340	
Pile Shoes		Each	18	
Test Pile Steel HP 12x53		Each	1	
Anchor Bolts, 1½"		Each	20	

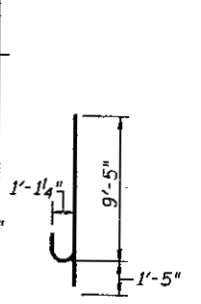

BAR n_{41}(E)

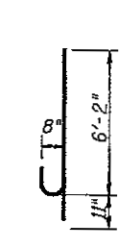

BAR n_{40}(E)

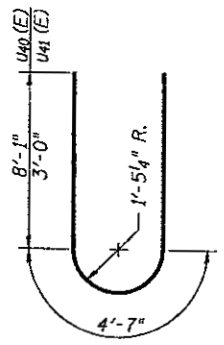

BARS u_{40}(E) & u_{41}(E)

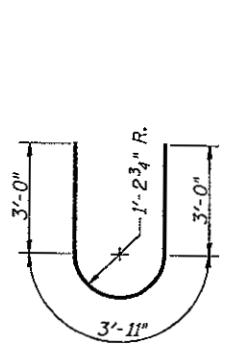

BAR u_{43}(E)

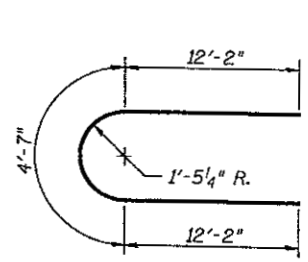

BAR s_{40}(E)

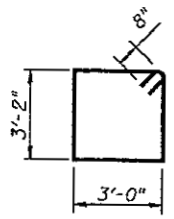

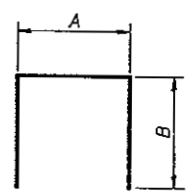

BARS s_{41}(E) thru s_{46}(E)

MINIMUM BAR LAP

HORIZONTAL

#5 - 2'-2" (Bottom of Footing)
#5 - 3'-0"
#9 - 8'-1"

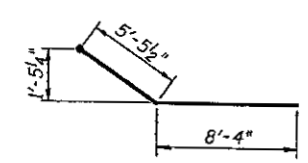

BAR u_{42}(E)

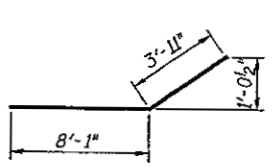

BAR p_{44}(E)

A & B DIMENSIONS

Bar	A	B
s_{41}(E)	3'-0"	2'-3"
s_{42}(E)	3'-0"	2'-6"
s_{43}(E)	3'-0"	2'-11"
s_{44}(E)	2'-8"	11'-8"
s_{45}(E)	2'-8"	10'-2"
s_{46}(E)	3'-0"	2'-3"

NOTES

Work this sheet with Sheet 40 of 50.
Reinforcement Bars designated (E) shall be epoxy coated.
Bar indicated thus 1x2 - #5 etc. indicates 1 line of bar with 2 lengths per line.
* Length is spiral height.

Corporate License Number 184-001-084

PIER 3 DETAILS

WESTBOUND HARRISON AVENUE
OVER UP & CC&P RAILROAD
F.A.P. ROUTE 0525
SECTION 02-00518-00-BR
ROCKFORD, ILLINOIS
STATION 95+25.35
STRUCTURE NO. 101-6109

© Copyright Hanson Professional Services Inc. 2006

HANSON

JOB NO. 03R1751
DATE 8/14/06

LAYOUT	JKR	03/07/06
DRAWN	MRM/JKR	07/17/06
CHECKED	FLM	08/07/06

10:09:45 AM
10/04/2006
N:\03Jobs\03R1751\Struct\Sheet\Westbound\S-04-WB-Pier3Det.dgn

NOTES

Space Reinforcement in cap to miss anchor bolts.
Pour steps monolithically with cap.
Work this sheet with Sheet 43 of 50.
Reinforcement Bars designated (E) shall be epoxy coated.
Bar indicated thus 1x2 - #5 etc. indicates 1 line of bar with 2 lengths per line.

ROUTE NO.	SECTION	COUNTY	TOTAL SHEETS	SHEET NO.
FAP 0525	*	WINNEBAGO	156	148
FED. ROAD DIST. NO. 7	ILLINOIS	FED. AID PROJECT		

* 02-00518-00-BR

SHEET NO. 42
50 SHEETS

PGL Westbound Harrison Avenue

57'-0"
32'-6"
24'-6"
5'-11⅝"
11'-2½"
11'-2½"
4'-1⅜"
7'-1⅛"
11'-2½"
6'-2⅜"
3⅝" (Typ.)
1¾" (Typ.)
12¼" (Typ.)
48°
1" ϕ Anchor Bolt (Typ.)
℄ Pier 4
4⅞" (Typ.)
3'-4"
1'-8"
1'-8"
11'-6"
11'-3"
9'-9"
1'-6"
11'-3"
11'-9"
$u_{50}(E)$, $u_{51}(E)$ or $u_{52}(E)$
$p_{50}(E)$
$s_{51}(E)$

TOP PLAN

22-#5 $s_{54}(E)$ bars at 1'-0" cts.
1'-9"
3-#6 $s_{53}(E)$ bars at 6½" cts. Top & Bott. Each End
85-#6 $s_{50}(E)$ bars at 6½" cts.
3-#6 $s_{52}(E)$ bars at 6½" cts. Top & Bott. Each End
1-#6 $s_{51}(E)$ bar Top & Bott. Each End
7⅛"
5x2-#9 $p_{50}(E)$ bars Top
Elev. 804.50
2⅝"
Elev. 804.72
2"
5-#5 $p_{52}(E)$ bars
Elev. 804.89
1⅞"
Elev. 805.05
6½"
6½"
6½"
1'-11½"
1-#5 $u_{51}(E)$ bar
2-#9 $u_{50}(E)$ bars Each End
2'-7⅜"
1x2-#9 $p_{50}(E)$ bars Each Face
3-#9 $p_{53}(E)$ bars & 1-#9 $u_{52}(E)$ bar Bottom Each End
5x2-#9 $p_{51}(E)$ bars Bottom
See Detail A for Reflected Underside Plan of Pier Cap End
12-#8 $v_{50}(E)$ bars Each Column See Sec. D-D
3½" Pitch
6'-0"
#5 $sp_{50}(E)$ spiral Each Column Provide 1½ extra turns top and bottom. Extend spiral 2" into pier cap. Provide 4-#4 spacers or equivalent.
Optional const. joint
Optional const. joint (Typ.)
6" (Typ.)
6'-0"
2'-8½" (Typ.)
7'-11"
7'-11"
7'-11"
7'-11"
1'-6" (Typ.)
3x2-#5 $h_{50}(E)$ bars Top
4'-8"
1'-6"
9-#5 $h_{50}(E)$ bars at ±1'-6" cts. Each Face
12-#8 $n_{50}(E)$ bars Ea. Column See Sec. D-D
45-#10 $s_{55}(E)$ bars at 1'-0" cts.
4-#10 $v_{51}(E)$ bars Each End
10-#5 $t_{53}(E)$ bars at ±1'-6" cts. Each End
1'-6"
7'-5"
48'-0"
1'-6"
1'-0" (Typ.)
45-#10 $s_{56}(E)$ bars at 1'-0" cts.
4-#10 $n_{51}(E)$ bars Each End
$w_{50}(E)$
$t_{50}(E)$
Elev. 770.93
35'-6"
13'-6"
3'-0"
3" cl.

ELEVATION
(Looking Northeast)

3'-4"
Elev. 804.43
3'-6"
2'-0"
Optional const. joint
4"
4"
1'-6" (Typ.)
13'-6"
$v_{50}(E)$
6"
6"
½"
$h_{50}(E)$
$n_{50}(E)$
$s_{55}(E)$
2" cl.
2" cl.
3'-2"
3'-8"
3'-2"
$h_{50}(E)$
$t_{50}(E)$
$s_{56}(E)$
$w_{50}(E)$
3" cl.
1'-6"
7'-0"
1'-6"
10'-0"

END VIEW

MINIMUM BAR LAP

HORIZONTAL

#5 - 2'-2" (Bottom of Footing)
#5 - 3'-0"
#9 - 8'-1"

Corporate License Number 184-001-084

PIER 4

WESTBOUND HARRISON AVENUE
OVER UP & CC&P RAILROAD
F.A.P. ROUTE 0525
SECTION 02-00518-00-BR
ROCKFORD, ILLINOIS
STATION 95+25.35
STRUCTURE NO. 101-6109

© Copyright Hanson Professional Services Inc. 2006

HANSON

JOB NO. 03R1751
DATE 8/14/06

	BY	DATE
LAYOUT		07/07/06
DRAWN	MMA/JWR	07/13/06
REVIEWED	FLH	08/02/06

FOLDER AM
ITOWERS06, ruby AM
N:\03\1751\03R1751\Struct\Sheet Bound\S-04249-Pier 4.dgn

ROUTE NO.	SECTION	COUNTY	TOTAL SHEETS	SHEET NO.
FAP 0525	•	WINNEBAGO	158	149
PROJECT SHEET NO. 7		ILLINOIS PRELIMS PROJECT		

• 02-00518-00-BR

SHEET NO. 43
50 SHEETS

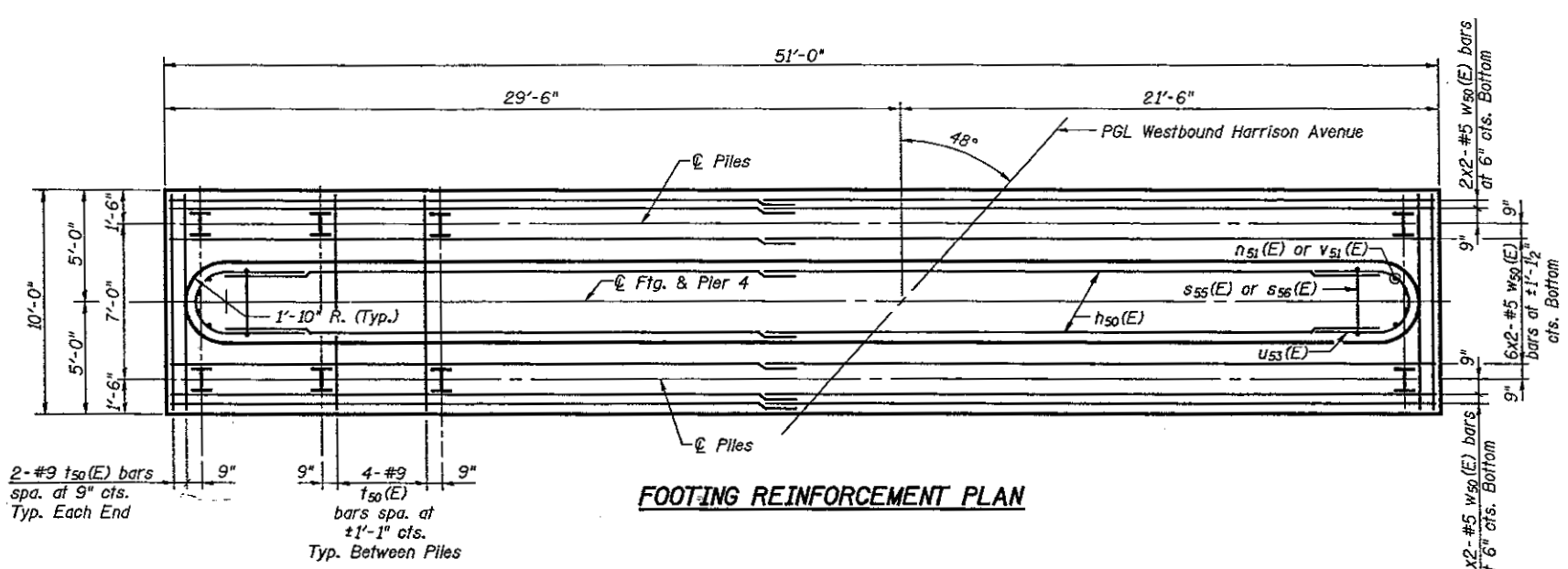

FOOTING REINFORCEMENT PLAN

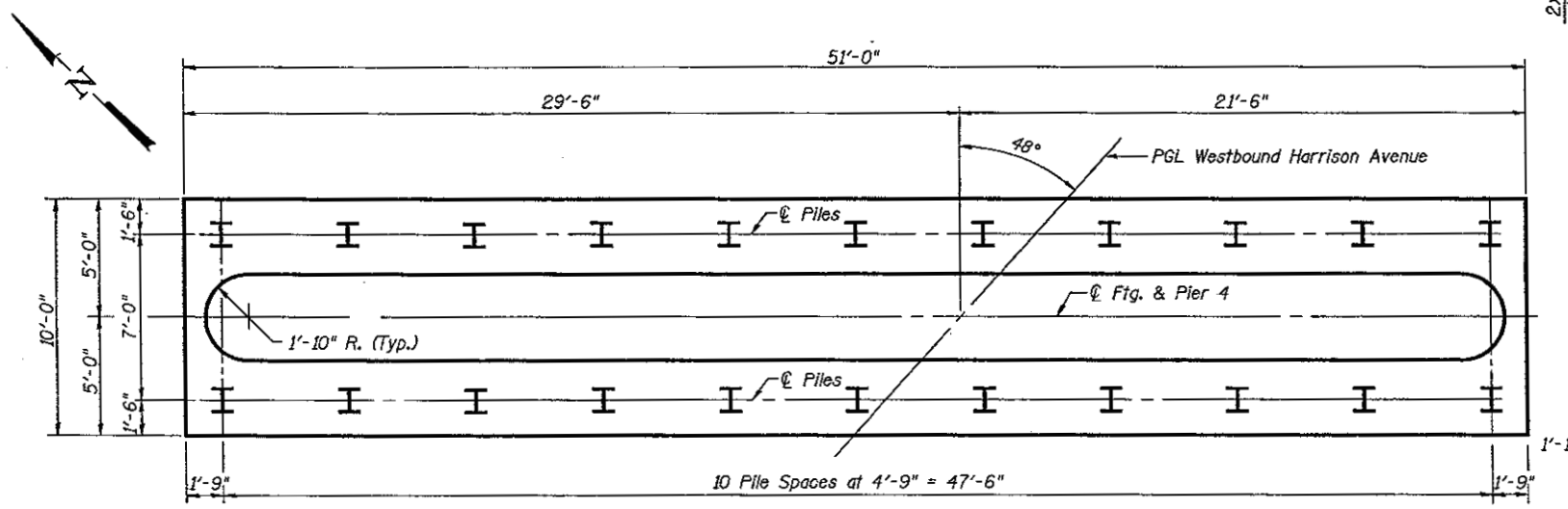

FOOTING PILE PLAN

PILE DATA

Type & Size: HP 12x53 w/ Pile Shoes
Nominal Required Bearing : 420 Kips
Allowable Resistance Available : 140 Kips
Est. Length: 24'
No. Req'd: 21 + 1 Test Pile

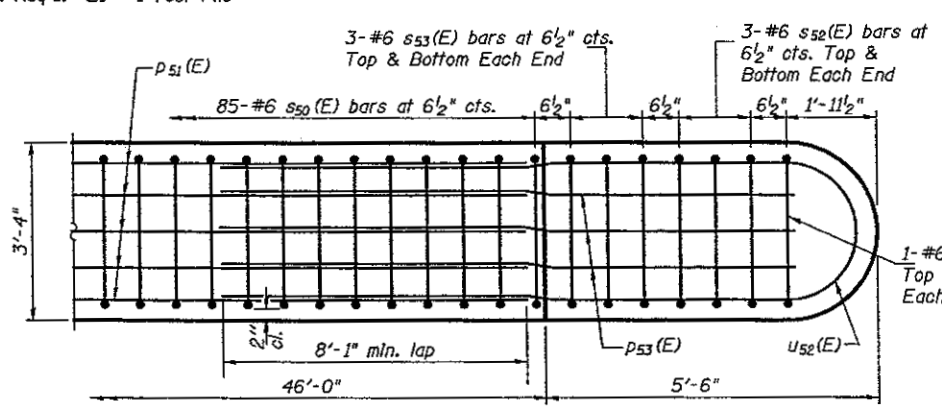

DETAIL A
REFLECTED UNDERSIDE PLAN OF PIER CAP END

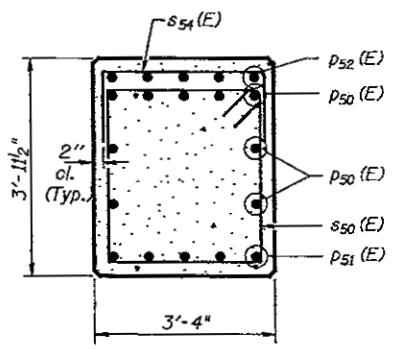

SECTION A-A

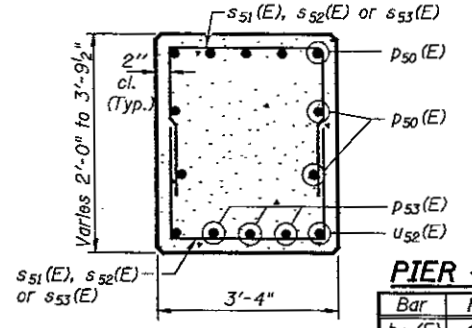

SECTION B-B

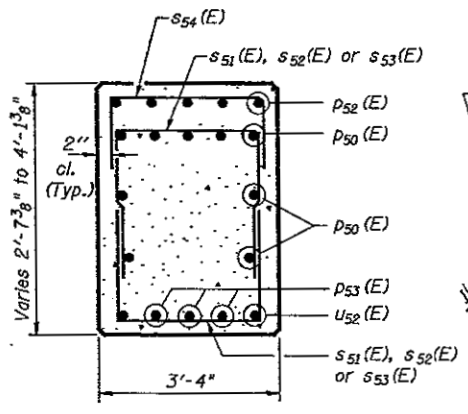

SECTION C-C

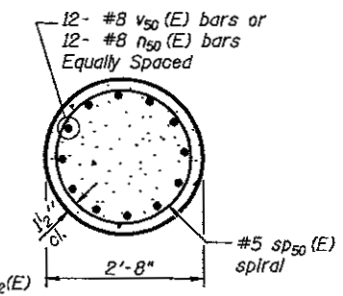

SECTION D-D

PIER 4 BILL OF MATERIAL

Bar	No.	Size	Length	Shape
$h_{50}(E)$	42	#5	23'-8"	
$n_{50}(E)$	60	#8	7'-1"	
$n_{51}(E)$	8	#10	10'-10"	
$p_{50}(E)$	18	#9	30'-11"	
$p_{51}(E)$	10	#9	27'-1"	
$p_{52}(E)$	5	#5	21'-2"	
$p_{53}(E)$	6	#9	12'-0"	
$s_{50}(E)$	85	#6	13'-8"	
$s_{51}(E)$	4	#6	7'-4"	
$s_{52}(E)$	12	#6	7'-8"	
$s_{53}(E)$	12	#6	8'-6"	
$s_{54}(E)$	22	#5	7'-4"	
$s_{55}(E)$	45	#10	29'-8"	
$s_{56}(E)$	45	#10	23'-8"	
* $sp_{50}(E)$	5	#5	13'-8"	
$t_{50}(E)$	44	#9	9'-8"	
$u_{50}(E)$	4	#9	20'-9"	
$u_{51}(E)$	1	#5	10'-7"	
$u_{52}(E)$	2	#9	28'-11"	
$u_{53}(E)$	20	#5	10'-11"	
$v_{50}(E)$	60	#8	15'-6"	
$v_{51}(E)$	8	#10	13'-2"	
$w_{50}(E)$	20	#5	26'-5"	

Concrete Structures	Cu. Yd.	182.7
Reinforcement Bars, Epoxy Coated	Pound	25,870
Structure Excavation	Cu. Yd.	438.4
Furnishing Steel Piles, HP 12x53	Foot	504
Driving Piles	Foot	504
Pile Shoes	Each	22
Test Pile Steel HP 12x53	Each	1
Anchor Bolts, 1"	Each	20

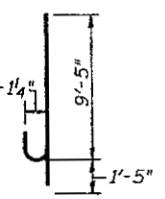

BAR $n_{51}(E)$

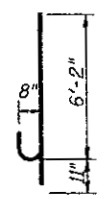

BAR $n_{50}(E)$

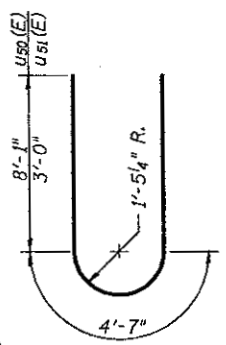

BARS $u_{50}(E)$ & $u_{51}(E)$

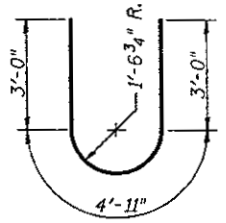

BAR $u_{53}(E)$

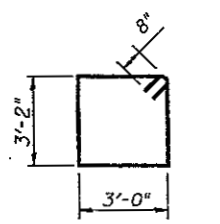

BAR $s_{50}(E)$

BAR $u_{52}(E)$

BAR $s_{50}(E)$

BAR $p_{53}(E)$

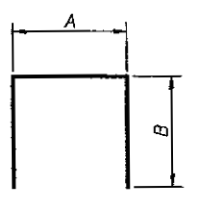

BARS $s_{51}(E)$ thru $s_{56}(E)$

A & B DIMENSIONS

Bar	A	B
$s_{51}(E)$	3'-0"	2'-2"
$s_{52}(E)$	3'-0"	2'-4"
$s_{53}(E)$	3'-0"	2'-9"
$s_{54}(E)$	3'-0"	2'-2"
$s_{55}(E)$	3'-4"	13'-2"
$s_{56}(E)$	3'-4"	10'-2"

MINIMUM BAR LAP

HORIZONTAL

#5 - 2'-2" (Bottom of Footing)
#5 - 3'-0"
#9 - 8'-1"

NOTES

Work this sheet with Sheet 42 of 50.
Reinforcement Bars designated (E) shall be epoxy coated. Bar indicated thus 1x2 - #5 etc. indicates 1 line of bar with 2 lengths per line.

* Length is spiral height.

Corporate License Number 184-001-084

PIER 4 DETAILS

WESTBOUND HARRISON AVENUE
OVER UP & CC&P RAILROAD
F.A.P. ROUTE 0525
SECTION 02-00518-00-BR
ROCKFORD, ILLINOIS
STATION 95+25.35
STRUCTURE NO. 101-6109

© Copyright Hanson Professional Services Inc. 2006

HANSON

JOB NO. 03R1751

DATE 8/14/06

LAYOUT	JRR	05/05/06
DRAWN	MSW/JRR	07/17/06
REVIEWED	FLK	08/02/06

10:09:09 AM
M:\03JobsR3\03R1751\Struct\Sheet\West Bound\S-043-W8-Pier4Det.dgn

ROUTE NO.	SECTION	COUNTY	TOTAL SHEETS	SHEET NO.
FAP 0525	*	WINNEBAGO	158	158
FED. ROAD DIST. NO. 7		ILLINOIS	FED. AID PROJECT	

* 02-00518-00-BR

SHEET NO. 44
50 SHEETS

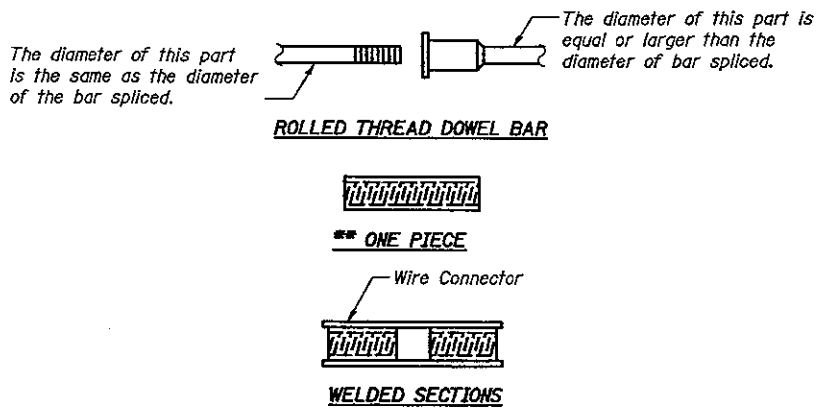

BAR SPLICER ASSEMBLY ALTERNATIVES

** Heavy Hex Nuts conforming to ASTM A 563, Grade C, D or DH may be used.

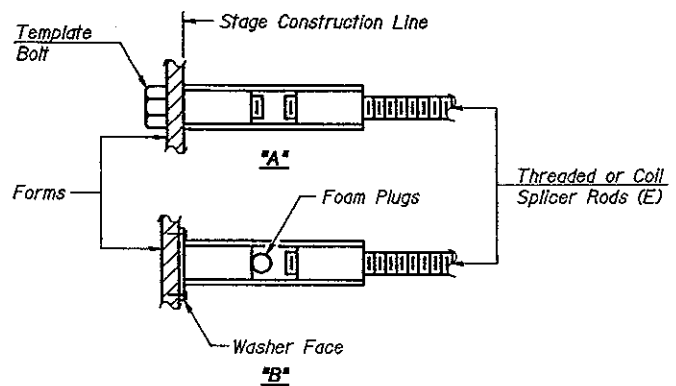

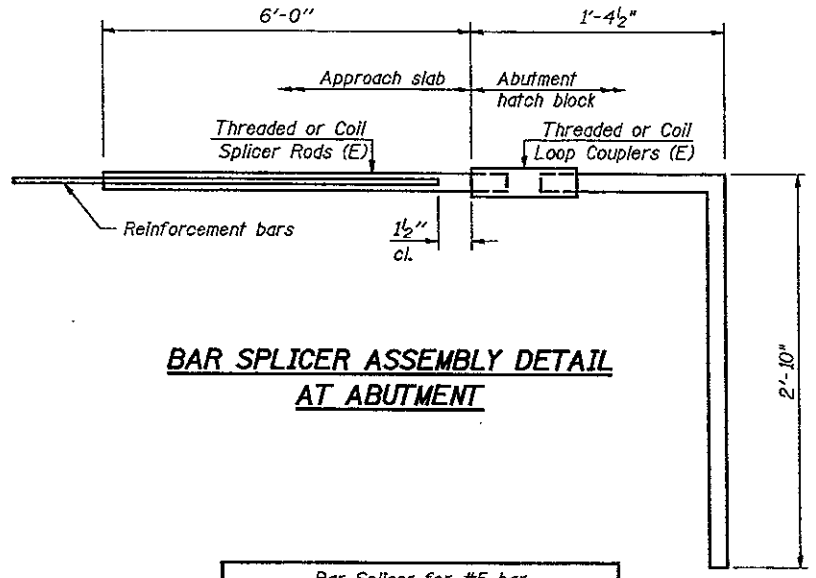

BAR SPLICER ASSEMBLY DETAIL AT ABUTMENT

Bar Splicer for #5 bar
Min. Capacity = 23.0 kips - tension
Min. Pull-out Strength = 9.2 kips - tension
No. Required = 68

NOTES

Bar splicer assemblies shall be of an approved type and shall develop in tension at least 125 percent of the yield strength of the lapped reinforcement bars.

Splicer rods shall be of minimum 60 ksi yield strength, threaded or coiled full length.

All reinforcement bars shall be lapped and tied to the splicer rods or dowel bars.

Bar splicer assemblies shall be epoxy coated according to the requirements for reinforcement bars.

Other systems of similar design may be submitted to the Engineer for approval. Approval shall be based on certified test results from an approved testing laboratory that the proposed bar splicer assembly satisfies the following requirements:

① Minimum Capacity (Tension in kips) = $1.25 \times fy \times A_t$

② Minimum *Pull-out Strength (Tension in kips) = $1.25 \times fs_{allow} \times A_t$

Where fy = Yield strength of lapped reinforcement bars in ksi.

fs_{allow} = Allowable tensile stress in lapped reinforcement bars in ksi (Service Load)

A_t = Tensile stress area of lapped reinforcement bars.

* = 28 day concrete

BAR SPLICER ASSEMBLIES			
Bar Size to be Spliced	Splicer Rod or Dowel Bar Length	Strength Requirements	
		Min. Capacity kips - tension	Min. Pull-Out Strength kips - tension
#4	1'-8"	14.7	5.9
#5	2'-0"	23.0	9.2
#6	2'-7"	33.1	13.3
#7	3'-5"	45.1	18.0
#8	4'-6"	58.9	23.6

Bar splicer assemblies shall be according to Section 508 of the Standard Specifications, except as noted. The furnishing and installation of bar splicer assemblies will be measured and paid for at the contract unit price each for "BAR SPLICERS."

INSTALLATION AND SETTING METHODS

"A" : Set bar splicer assembly by means of a template bolt.
"B" : Set bar splicer assembly by nailing to wood forms or cementing to steel forms.
(E) : Indicates epoxy coating.

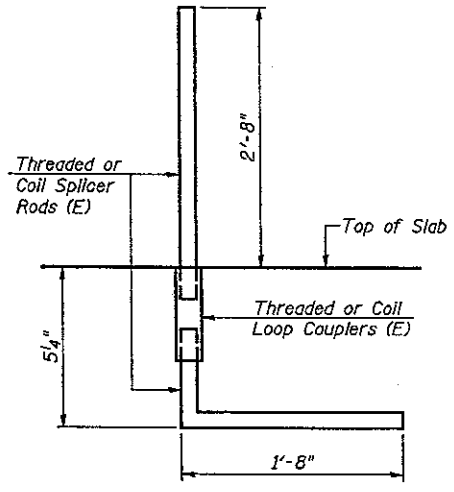

TYPE I BAR SPLICER ASSEMBLY

Bar Size	No. Assemblies Required	Location
#4	455	N. Parapet on Bridge, Outside Face

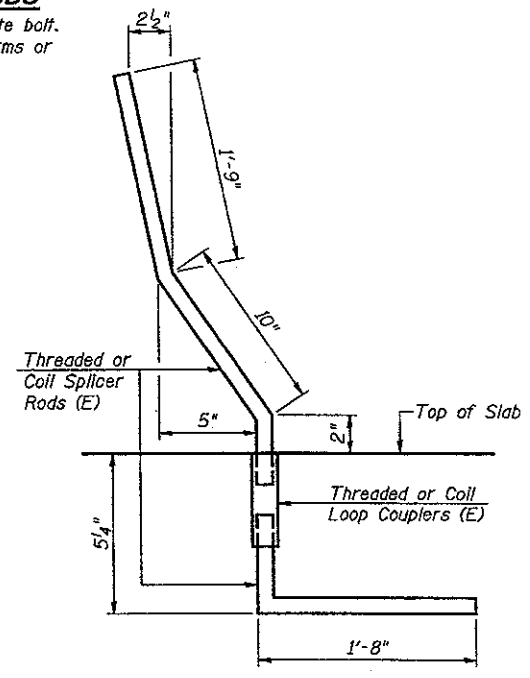

TYPE II BAR SPLICER ASSEMBLY

Bar Size	No. Assemblies Required	Location
#5	455	N. Parapet on Bridge, Inside Face

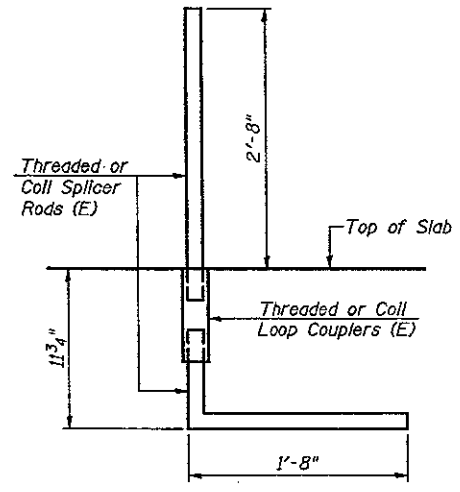

TYPE III BAR SPLICER ASSEMBLY

Bar Size	No. Assemblies Required	Location
#4	73	N. Parapet on Approach, Outside Face

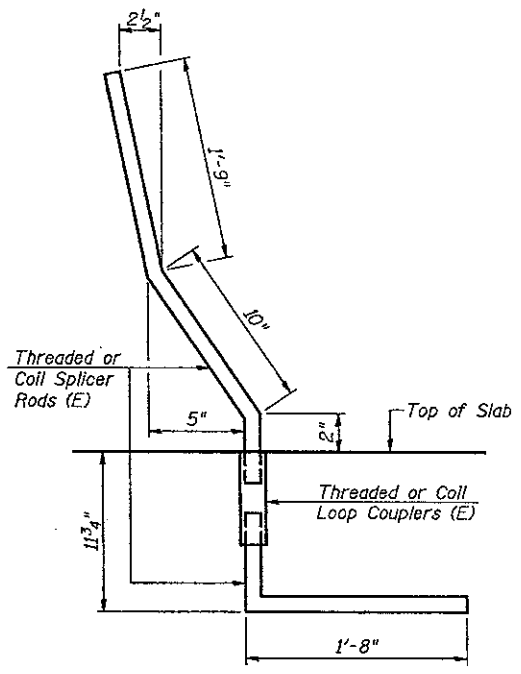

TYPE IV BAR SPLICER ASSEMBLY

Bar Size	No. Assemblies Required	Location
#5	73	N. Parapet on Approach, Inside Face

Corporate License Number 184-001-084

BAR SPLICER ASSEMBLY DETAILS

WESTBOUND HARRISON AVENUE
OVER UP & CC&P RAILROAD
F.A.P. ROUTE 0525
SECTION 02-00518-00-BR
ROCKFORD, ILLINOIS
STATION 95+25.35
STRUCTURE NO. 101-6109

© Copyright Hanson Professional Services Inc. 2006

HANSON

JOB NO. 03R1751

DATE 8/14/06

LAYOUT	MDM	09/06/05
DRAWN	MDM/JKR	01/17/06
REVIEWED	FLN	08/02/06

10:20:38 AM
10/04/2006, 10:20 AM
N:\03 Jobs\03r1751\Struct\Sheet\West Bound\S-044-WB-BarSplicer.dgn

ROUTE NO.	DIRECTION	COUNTY	TOTAL SHEETS	SHEET NO.
FAP 0525	e	WINNEBAGO	156	151
FED. ROAD CONT. NO. 7	ILL. ROUTE	FED. AID PROJECT		

* 02-00518-00-BR

SHEET NO. 45
50 SHEETS

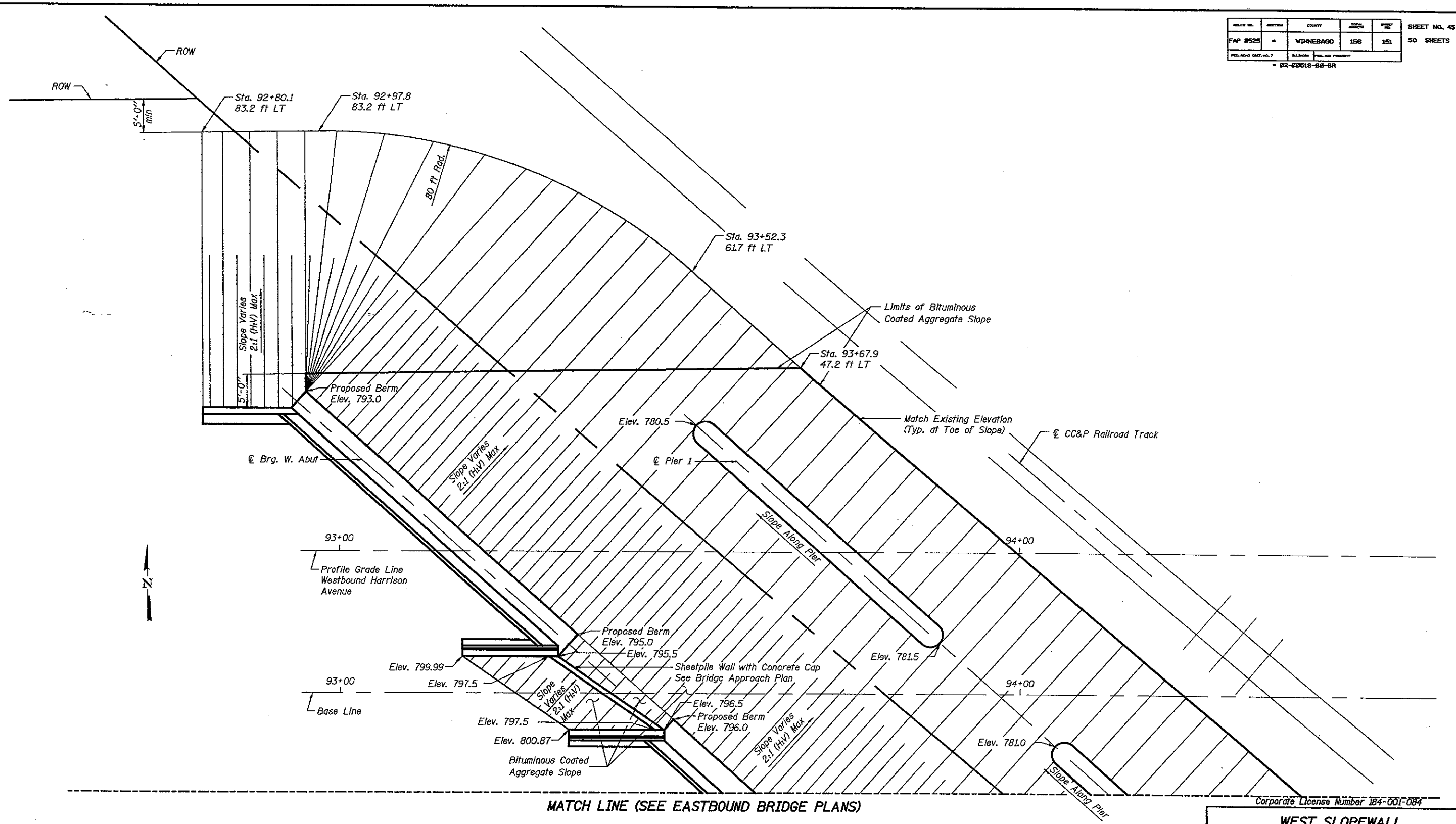

PLAN

NOTES

Stationing and offset are defined with respect to the Base Line

LAYOUT	JKR	06/30/06
DRAWN	JKR	07/17/06
REVIEWED	PLH	08/02/06

MARQUEE AM
I:\DATA\2006\MED AM
I:\03ri1751\Struct\SheetWest Bound\S-045-WB-WestSlopewall.dgn

Corporate License Number 184-001-084

WEST SLOPEWALL

WESTBOUND HARRISON AVENUE
OVER UP & CC&P RAILROAD
F.A.P. ROUTE 0525
SECTION 02-00518-00-BR
ROCKFORD, ILLINOIS
STATION 95+25.35
STRUCTURE NO. 101-6109

© Copyright Hanson Professional Services Inc. 2006

HANSON

JOB NO. 03RI1751

DATE 8/14/06

ROUTE NO.	SECTION	COUNTY	TOTAL SHEETS	SHEET NO.
FAP 0525	*	WINNEBAGO	156	152
FED. ROAD DIST. NO. 7	ILLINOIS	FED. AID PROJECT		

* 02-00518-00-BR

SHEET NO. 46
50 SHEETS

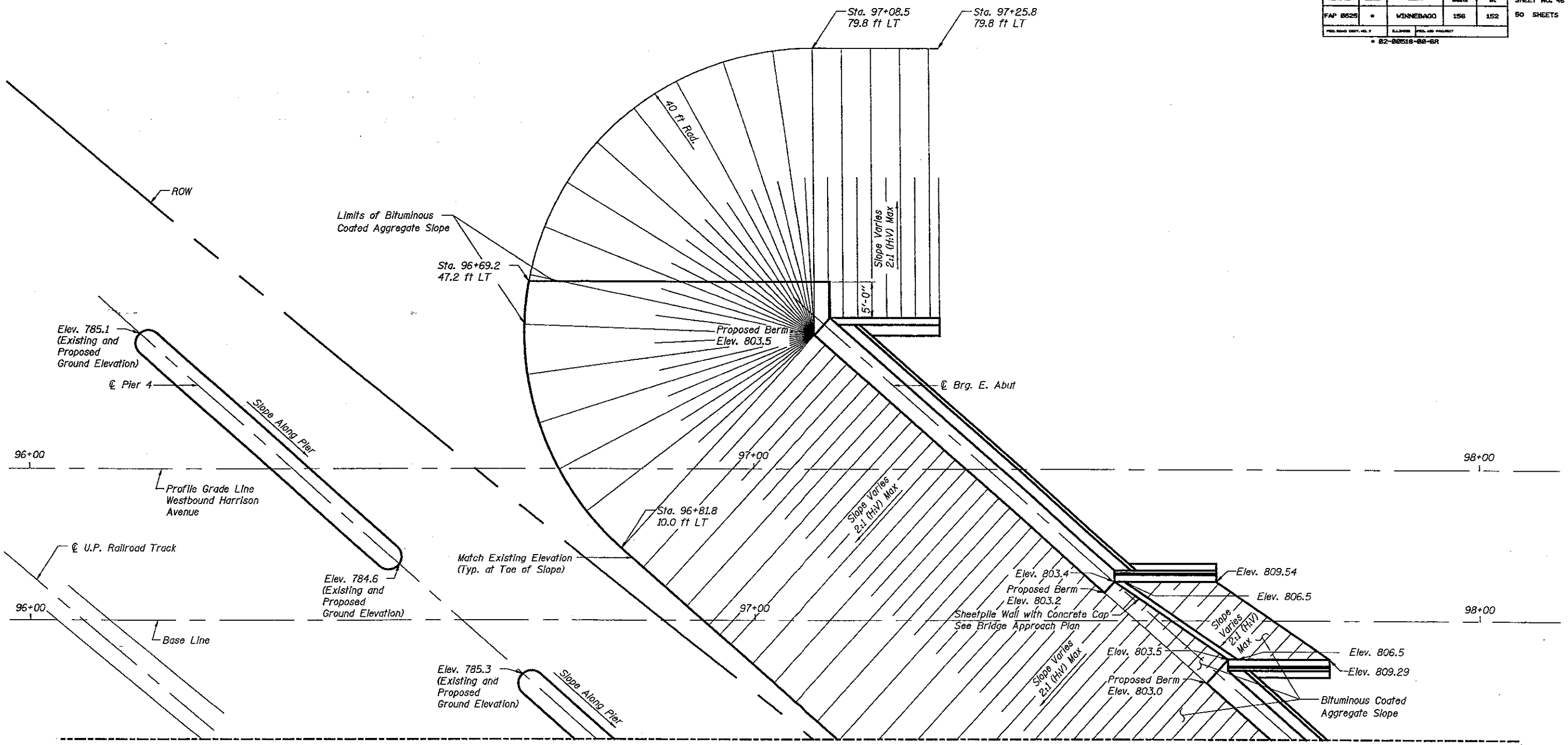

PLAN

N

NOTES

Stationing and offset defined with respect to the Base Line

Corporate License Number 184-001-084

EAST SLOPEWALL

WESTBOUND HARRISON AVENUE
OVER UP & CC&P RAILROAD
F.A.P. ROUTE 0525
SECTION 02-00518-00-BR
ROCKFORD, ILLINOIS
STATION 95+25.35
STRUCTURE NO. 101-6109

© Copyright Hanson Professional Services Inc. 2006

HANSON

JOB NO. 03R1751

DATE 8/14/06

LAYOUT	JKR	07/07/06
DRAWN	JKR	07/17/06
REVIEWED	FLN	08/02/06

10:21:41 AM
10\04\2006, 10:21 AM
N:\03 Jobs\03R1751\Struct\Sheet\West Bound\S-046-WB-EastSlopewall.dgn

ROUTE NO.	SECTION	COUNTY	TOTAL SHEETS	SHEET NO.
FAP 0525	*	WINNEBAGO	156	153
PROJ. ROAD DIST. NO. 7	ILLINOIS	PROJ. NO. PROJECT		

* 02-00518-00-BR

SHEET NO. 47
50 SHEETS

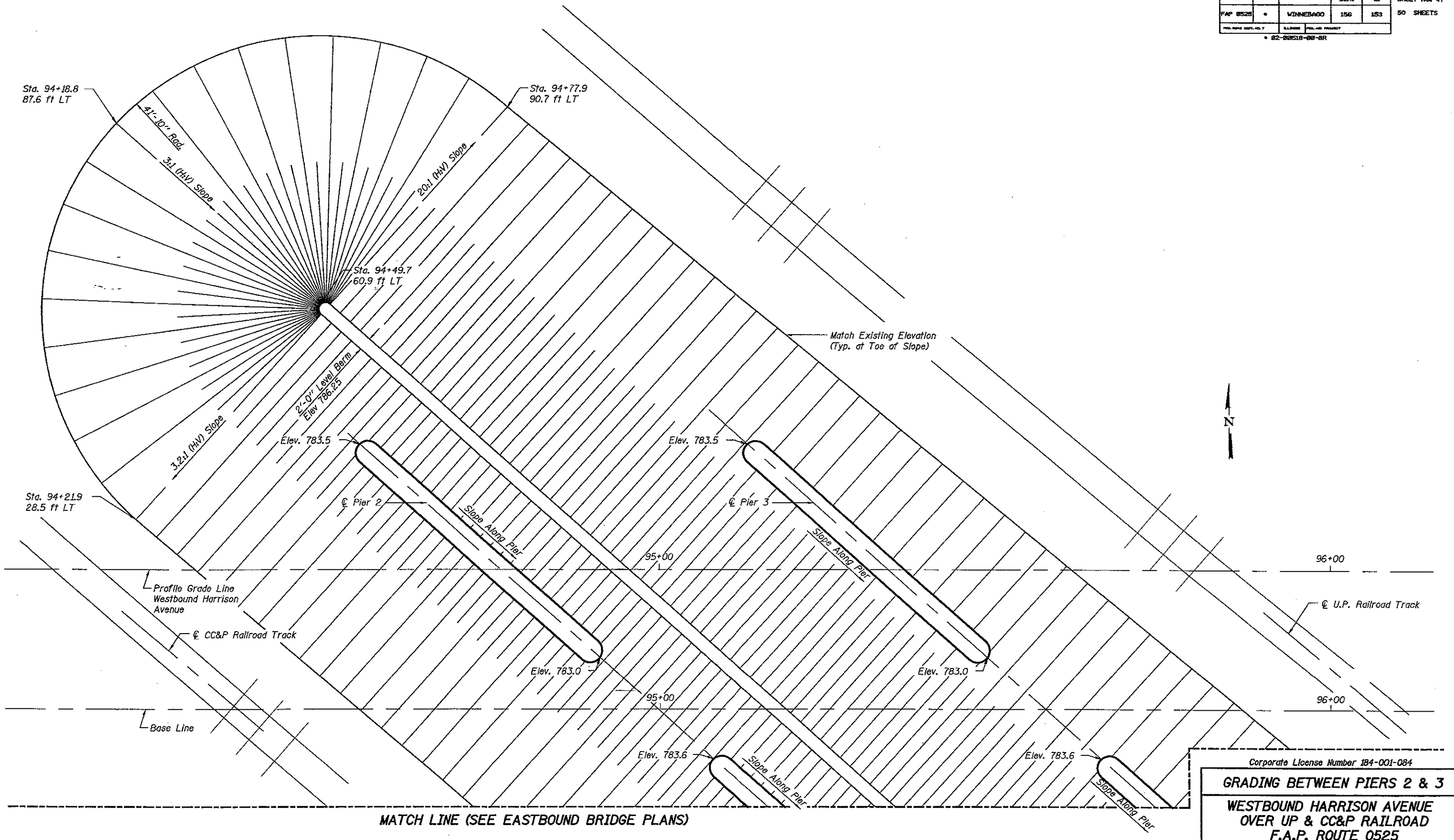

PLAN

NOTES

Stationing and offset are defined with respect to the Base Line.

LAYOUT	JKR	01/06/06
DRAWN	JKR	01/11/06
REVIEWED	RJM	08/02/06

10:02:30 AM
1/04/2006 10:02 AM
I:\03\job\2x7\PS\Struct Sheet\West Bound\S-04-WB-Grading.dgn

Corporate License Number 184-001-084

GRADING BETWEEN PIERS 2 & 3

WESTBOUND HARRISON AVENUE
OVER UP & CC&P RAILROAD
F.A.P. ROUTE 0525
SECTION 02-00518-00-BR
ROCKFORD, ILLINOIS
STATION 95+25.35
STRUCTURE NO. 101-6109

© Copyright Hanson Professional Services Inc. 2006

HANSON

JOB NO. 03R1751

DATE 8/14/06

ROUTE NO.	SECTION	COUNTY	TOTAL SHEETS	SHEET NO.
FAP 0525	*	WINNEBAGO	156	154
FED. ROAD DIST. NO. 7		ILLINOIS	PROJ. AID PROJECT	

* 02-00518-00-BR

SHEET NO. 48
50 SHEETS

PROJECT Harrison Avenue Bridge over UP and CN Railroads, Rockford, Illinois
CLIENT Hanson Professional Services, Inc., 1525 S. Sixth St., Springfield, IL 62703
BORING B-1 DATE STARTED 3-4-04 DATE COMPLETED 3-4-04 JOB L-59,706

ELEVATIONS
GROUND SURFACE 795.2 *
END OF BORING 751.3 *

WATER TABLE
▽ WHILE DRILLING DRY
▽ AT END OF BORING DRY
▼ 24 HOURS

SAMPLE NO.	SAMPLE TYPE	LENGTH RECOVERY	N	WC	Qu	γDRY	DEPTH	* ELEV.	SOIL DESCRIPTIONS
							0.4	794.8	Dark brown clayey TOPSOIL (OL)
									FILL - Dark brown-brown silty CLAY, little sand (CL)
1	SS		2-3-2				3.5	791.7	Brown very silty CLAY, little sand and gravel (CL)
2	SS		3-3-4						
3	SS		6-9-13				8.0	789.2	Brown silty SAND, little gravel (SM)
4	SS		9-16-16						
5	SS		9-13-16				11.0	784.2	Brown very silty CLAY, little sand and gravel (CL)
6	SS		15-14-15						
7	SS		9-17-23						
8	SS		9-13-15						
9	SS		5-6-9				23.5	771.7	Brown silty CLAY, trace sand and gravel (CL)
							26.0	769.2	Gray silty CLAY, trace sand and gravel (CL)
							28.5	766.7	Brown silty CLAY, trace sand and gravel (CL)
A 10 B	SS		9-11-20				29.5	765.7	Brown silty SAND, little gravel (SM)
11	SS		20-31 50/5"						
12	SS		9-29-32						
13	SS		50/4.5"					751.3	End of Boring at 43.9' - Auger Refusal

DISTANCE BELOW SURFACE IN FEET

DRILL RIG NO. 242

Division lines between deposits represent approximate boundaries between soil types; in-situ, the transition may be gradual.

BORING LOG #1

PROJECT Harrison Avenue Bridge over UP and CN Railroads, Rockford, Illinois
CLIENT Hanson Professional Services, Inc., 1525 S. Sixth St., Springfield, IL 62703
BORING B-2 DATE STARTED 3-2-04 DATE COMPLETED 3-2-04 JOB L-59,706

ELEVATIONS
GROUND SURFACE 780.7 *
END OF BORING 736.3 *

WATER TABLE
▽ WHILE DRILLING 37 '
▽ AT END OF BORING 37 '
▼ 24 HOURS 37 '

SAMPLE NO.	SAMPLE TYPE	LENGTH RECOVERY	N	WC	Qu	γDRY	DEPTH	* ELEV.	SOIL DESCRIPTIONS
									FILL - Brown silty CLAY, little sand, trace gravel (CL)
1	SS		3-4-5				3.5	777.2	Brown very silty CLAY, some sand, trace gravel (CL)
2	SS		3-3-6						
3	SS		3-3-4				6.0	774.7	Brown silty SAND, little gravel (SM)
4	SS		2-2-3				8.5	772.2	Brown silty CLAY, some sand, trace gravel (CL)
5	SS		3-3-5						
6	SS		7-10-11				13.5	767.2	Gray silty CLAY, trace sand and gravel (CL)
7	SS		3-11-13						
8	SS		9-33 50/5"				18.5	762.2	Brown silty SAND and GRAVEL (SM/GM)
9	SS		50/5"						
10	SS		13-20-23						
11	SS		7-9-15				33.5	747.2	Brown silty CLAY, trace sand and gravel (CL)
									▼
12	SS		5-11-14				38.5	742.2	Gray silty CLAY, trace sand and gravel (CL)
							43.5	737.2	Brown silty SAND, little gravel (SM)
13	SS		29-50/5"					736.3	End of Boring at 44.4' - Auger Refusal

DISTANCE BELOW SURFACE IN FEET

DRILL RIG NO. 242

Division lines between deposits represent approximate boundaries between soil types; in-situ, the transition may be gradual.

BORING LOG #2

* - All elevations provided by Hanson Professional Services Inc.

Corporate License Number 184-001-084

BORING LOGS #1 & #2

WESTBOUND HARRISON AVENUE
OVER UP & CC&P RAILROAD
F.A.P. ROUTE 0525
SECTION 02-00518-00-BR
ROCKFORD, ILLINOIS
STATION 95+25.35
STRUCTURE NO. 101-6109

© Copyright Hanson Professional Services Inc. 2006

HANSON

JOB NO. 03R1751
DATE 8/14/06

LAYOUT	MDH	05/20/05
DRAWN	MDH	09/06/05
RECHECKED	FLH	09/07/05

ROUTE# IM
ROUTE# IM
I-90/I-39 Rockford, IL
I:\03jobs\03r1751\Structr\Sheet\West Bound\S-04B-WB-SB1.dgn

ROUTE NO.	SECTION	COUNTY	TOTAL SHEETS	SHEET NO.
FAP 0525	*	WINNEBAGO	156	155
FED. ROAD DIST. NO. 7	ILLINOIS	CONTRACT PROJECT		

* 02-00518-00-BR

SHEET NO. 49
50 SHEETS

PROJECT Harrison Avenue Bridge over UP and CN Railroads, Rockford, Illinois
CLIENT Hanson Professional Services, Inc., 1525 S. Sixth St., Springfield, IL 62703
BORING B-3 DATE STARTED 3-2-04 DATE COMPLETED 3-2-04 JOB L-59,708

ELEVATIONS
GROUND SURFACE 794.5 *
END OF BORING 735.1 *

WATER TABLE
▽ WHILE DRILLING DRY
▽ AT END OF BORING DRY
▼ 24 HOURS DRY

SAMPLE NO.	SAMPLE TYPE	N	WC	Qu	γDRY	DEPTH	# ELEV.	SOIL DESCRIPTIONS
						0		FILL - Light brown clayey SILT, little sand (ML)
1	SS	2-3-5				1.5	793.0	Dark brown clayey SILT, little sand (ML)
2	SS	10-11-6				3.5	791.0	Brown very silty CLAY, little sand and gravel (CL)
3	SS	7-4-4						
4	SS	5-7-8						
5	SS	4-7-7						
6	SS	5-6-8						
7	SS	5-8-10				16.0	778.5	Brown silty CLAY, trace sand and gravel (CL)
8	SS	7-7-12						
9	SS	25-41-24				23.5	771.0	Brown silty SAND and GRAVEL (SM/GM)
10	SS	50/6"						
11	SS	50/6.5"						
12	SS	14-19-17						
13	SS	12-14-20				43.5	751.0	Brown silty CLAY, trace sand and gravel (CL)
14	SS	4-9-15				48.5	746.0	Gray silty CLAY, trace sand and gravel (CL)
15	SS	7-11-16						
16	SS	9-50/5"				58.5	736.0	Brown silty SAND, some gravel (SM)
							735.1	End of Boring at 59.4' - Auger Refusal

DISTANCE BELOW SURFACE IN FEET

DRILL RIG NO. 242

Division lines between deposits represent approximate boundaries between soil types; in-situ, the transition may be gradual.

BORING LOG #3

PROJECT Harrison Avenue Bridge over UP and CN Railroads, Rockford, Illinois
CLIENT Hanson Professional Services, Inc., 1525 S. Sixth St., Springfield, IL 62703
BORING B-4 DATE STARTED 3-3-04 DATE COMPLETED 3-3-04 JOB L-59,708

ELEVATIONS
GROUND SURFACE 789.3 *
END OF BORING 744.9 *

WATER TABLE
▽ WHILE DRILLING DRY
▽ AT END OF BORING DRY
▼ 24 HOURS DRY

SAMPLE NO.	SAMPLE TYPE	N	WC	Qu	γDRY	DEPTH	# ELEV.	SOIL DESCRIPTIONS
1	SS	4-6-8				0		FILL - Brown very silty CLAY, little sand (CL)
2	SS	3-7-5				3.5	785.8	Brown silty CLAY, little sand and gravel (CL)
3	SS	3-6-8						
4	SS	9-23-22				8.5	780.8	Brown silty SAND and GRAVEL (SM/GM)
5	SS	9-10-11						
6	SS	10-20-22						
7	SS	10-12-15				16.0	773.3	Brown silty SAND, trace gravel (SM)
8	SS	10-15-17						
9	SS	50/6"				21.0	768.3	Brown silty SAND and GRAVEL (SM/GM)
10	SS	10-17-23						
11	SS	14-24-30				33.5	755.8	Brown silty SAND (SM)
12	SS	9-50/5.5"				36.0	751.3	Brown silty SAND, little gravel (SM)
13	SS	30-50/5"						
							744.9	End of Boring at 44.4' - Auger Refusal

DISTANCE BELOW SURFACE IN FEET

DRILL RIG NO. 242

Division lines between deposits represent approximate boundaries between soil types; in-situ, the transition may be gradual.

BORING LOG #4

PROJECT Harrison Avenue Bridge over UP and CN Railroads, Rockford, Illinois
CLIENT Hanson Professional Services, Inc., 1525 S. Sixth St., Springfield, IL 62703
BORING B-5 DATE STARTED 3-4-04 DATE COMPLETED 3-4-04 JOB L-59,708

ELEVATIONS
GROUND SURFACE 786.5 *
END OF BORING 741.5 *

WATER TABLE
▽ WHILE DRILLING DRY
▽ AT END OF BORING DRY
▼ 24 HOURS

SAMPLE NO.	SAMPLE TYPE	N	WC	Qu	γDRY	DEPTH	# ELEV.	SOIL DESCRIPTIONS
1	SS	6-5-8				0		Brown very silty CLAY, little sand and gravel (CL)
2	SS	9-12-16						
3	SS	8-9-12						
4	SS	7-10-13						
5	SS	9-11-12						
6	SS	7-11-16				13.5	773.0	Gray silty CLAY, trace sand and gravel (CL)
A 7 B	SS	9-17-25				16.0	770.5	Brown very silty CLAY, little sand, trace gravel (CL)
8	SS	50/6"				17.0	769.5	Brown silty SAND, little gravel (SM)
9	SS	21-50/5"						
10	SS	25-20-20						
11	SS	11-15-23				33.5	753.0	Light brown silty SAND, little gravel (SM)
12	SS	12-17-23						
13	SS	7-5-15				43.5	743.0	Brown silty CLAY, trace sand and gravel (CL)
							741.5	End of Boring at 45.0'

DISTANCE BELOW SURFACE IN FEET

DRILL RIG NO. 242

Division lines between deposits represent approximate boundaries between soil types; in-situ, the transition may be gradual.

BORING LOG #5

* - All elevations provided by Hanson Professional Services Inc.

Corporate License Number 184-001-084

BORING LOGS #3, #4 & #5

WESTBOUND HARRISON AVENUE
OVER UP & CC&P RAILROAD
F.A.P. ROUTE 0525
SECTION 02-00518-00-BR
ROCKFORD, ILLINOIS
STATION 95+25.35
STRUCTURE NO. 101-6109

© Copyright Hanson Professional Services Inc. 2006

HANSON

JOB NO. 03R1751

DATE 8/14/06

LAYOUT	MBK	05/20/05
DRAWN	MJM	05/06/05
REVIEWED	FLN	08/02/06

n:\jobs\ 03r1751\Drawings\Bridge\Sheets\Boring Logs\Boring Logs #3, #4 & #5.dgn
8/14/2006 7:44:11 AM

ROUTE NO.	SECTION	COUNTY	TOTAL SHEETS	SHEET NO.
FAP 0525	*	WINNEBAGO	156	156
FED. ROAD DIST. NO. 7		ILLINOIS	FED. AID PROJECT	

SHEET NO. 50
50 SHEETS

* 02-00518-00-BR

PROJECT Harrison Avenue Bridge over UP and CN Railroads, Rockford, Illinois
CLIENT Hanson Professional Services, Inc., 1525 S. Sixth St., Springfield, IL 62703
BORING B-6 DATE STARTED 3-3-04 DATE COMPLETED 3-3-04 JOB L-59,708

ELEVATIONS
GROUND SURFACE 786.8 *
END OF BORING 741.8 *

WATER TABLE
▽ WHILE DRILLING DRY
▽ AT END OF BORING DRY
▼ 24 HOURS DRY

SAMPLE NO.	TYPE	N	WC	Qu	γDRY	DEPTH	* ELEV.	SOIL DESCRIPTIONS
								FILL - Brown silty CLAY, some sand (CL)
						1.0	785.8	Brown silty CLAY, little sand, trace gravel (CL)
1	SS	7-7-7						
2	SS	7-8-9						
						6.0	780.8	Brown silty SAND, trace gravel (SM)
3	SS	11-17-14						
						8.5	778.3	Brown very silty CLAY, little sand, trace gravel (CL)
4	SS	7-12-13						
5	SS	10-10-14						
						13.5	773.3	Brown silty SAND and GRAVEL (SM/GM)
6	SS	10-24-29						
7	SS	16-21-34						
						18.5	768.3	Gray silty CLAY, trace sand and gravel (CL)
8	SS	7-9-10						
9	SS	10-10-14						
						28.5	758.3	Brown silty SAND and GRAVEL (SM/GM)
10	SS	50/4"						
11	SS	50/6"						
12	SS	30-30-34						
13	SS	21-35-29						
							741.8	End of Boring at 45.0'

DISTANCE BELOW SURFACE IN FEET: 0, 5, 10, 15, 20, 25, 30, 35, 40, 45, 50

DRILL RIG NO. 242

Division lines between deposits represent approximate boundaries between soil types; in-situ, the transition may be gradual.

BORING LOG #6

PROJECT Harrison Avenue Bridge over UP and CN Railroads, Rockford, Illinois
CLIENT Hanson Professional Services, Inc., 1525 S. Sixth St., Springfield, IL 62703
BORING B-7 DATE STARTED 3-3-04 DATE COMPLETED 3-3-04 JOB L-59,708

ELEVATIONS
GROUND SURFACE 798.9 *
END OF BORING 753.9 *

WATER TABLE
▽ WHILE DRILLING DRY
▽ AT END OF BORING DRY
▼ 24 HOURS DRY

SAMPLE NO.	TYPE	N	WC	Qu	γDRY	DEPTH	* ELEV.	SOIL DESCRIPTIONS
								FILL - Dark brown silty CLAY, trace sand (CL)
						1.0	797.9	Brown very silty CLAY, little sand, trace gravel (CL)
1	SS	9-11-10						
2	SS	9-3-3						
						6.0	792.9	Brown silty SAND and GRAVEL (SM/GM)
3	SS	8-13-15						
4	SS	8-13-16						
5	SS	7-12-11						
6	SS	7-13-20						
						16.0	782.9	Brown very silty CLAY, little sand and gravel (CL)
7	SS	10-11-10						
8	SS	10-12-14						
9	SS	7-10-14						
						31.0	767.9	Gray silty CLAY, trace sand and gravel (CL)
10	SS	4-5-9						
11	SS	6-6-6						
						38.0	760.9	Brown silty SAND, some gravel (SM)
12	SS	15-50/4"						
13	SS	16-21 50/4"						
							753.9	End of Boring at 45.0'

DISTANCE BELOW SURFACE IN FEET: 0, 5, 10, 15, 20, 25, 30, 35, 40, 45, 50

DRILL RIG NO. 242

Division lines between deposits represent approximate boundaries between soil types; in-situ, the transition may be gradual.

BORING LOG #7

* - All elevations provided by Hanson Professional Services Inc.

Corporate License Number 184-001-084

BORING LOGS #6 & #7

WESTBOUND HARRISON AVENUE
OVER UP & CC&P RAILROAD
F.A.P. ROUTE 0525
SECTION 02-00518-00-BR
ROCKFORD, ILLINOIS
STATION 95+25.35
STRUCTURE NO. 101-6109

© Copyright Hanson Professional Services Inc. 2006

HANSON

JOB NO. 03R1751
DATE 8/14/06

LAYOUT	MGM	05/20/05
DRAWN	MGM	09/06/05
REVIEWED	FLN	09/02/06

10:22:30 AM
10/04/2006, 10:22 AM
I:\03\Jobs*g171\Struct\Sheet\West Bound\S-050-WB-SB-3.dgn