EXHIBIT D

Circuitry Drawings
[See Attached]

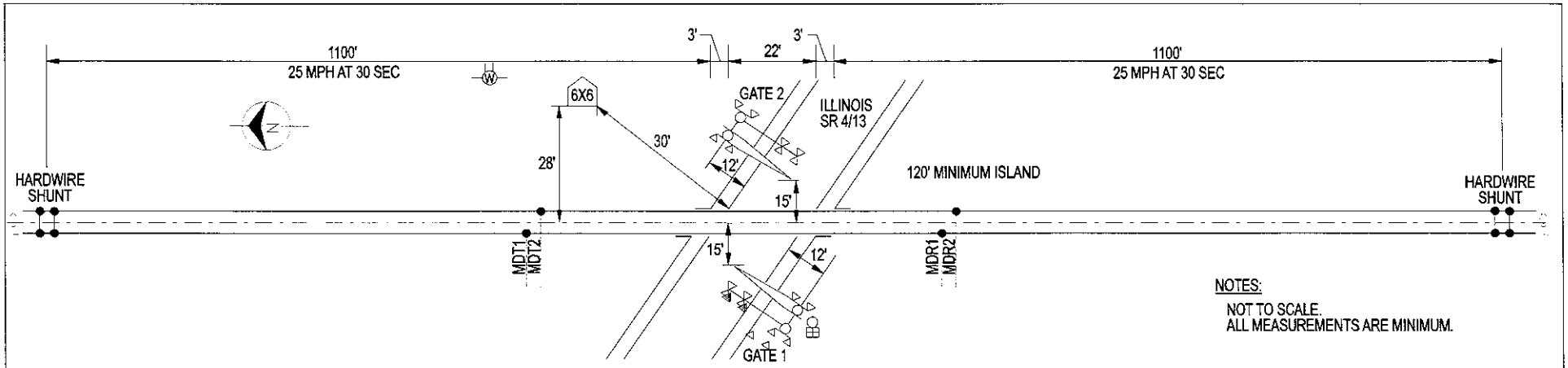

NOTES:

NOT TO SCALE.
ALL MEASUREMENTS ARE MINIMUM.

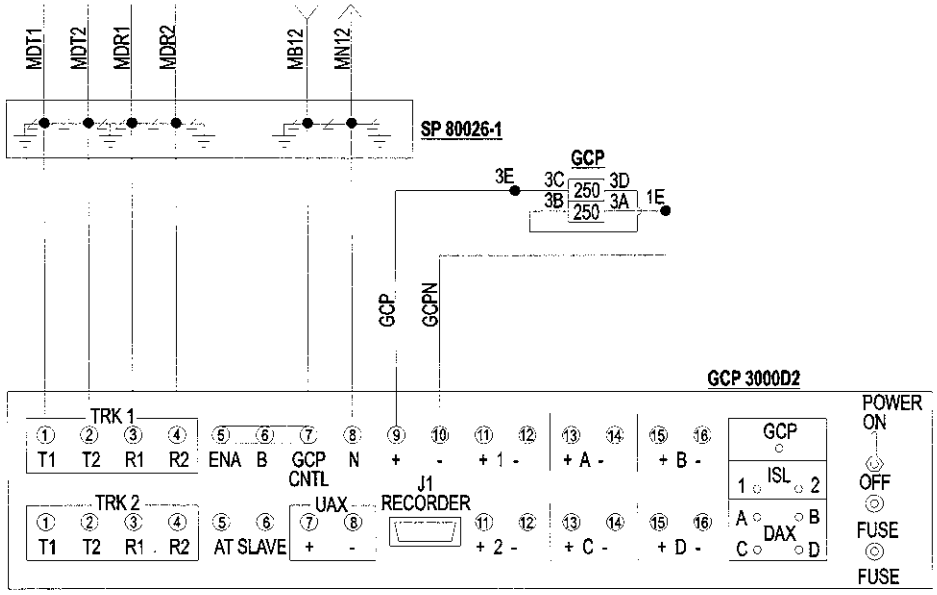

GCP 3000D2

GCP FREQUENCY 430 HZ
ISLAND 1 CARRIER FREQUENCY 7100 HZ

Burns & McDonnell SINCE 1898	**PRAIRIE STATE ENERGY CAMPUS**	Project	35223
date JULY 11, 2006	EXHIBIT D (SHEET 1 OF 5)	Revision No.	B
designed J. BIGLAND	IL ROUTE 4/13 CROSSING WARNING PLAN TYPICAL CIRCUITS	File Name	EXH_D1-0

PROGRAM OPTIONS

OPTION		
NUMBER OF TRACKS		1
FREQUENCY		430 HZ
UNI/BI DIRECTION	TRACK 1	BI
	TRACK 2	NA
X-MIT LEVEL	TRACK 1	MAX
	TRACK 2	NA
PREDICTOR/MOTION SENSOR	TRACK 1	PRED
	TRACK 2	NA
WARNING TIME	TRACK 1	30
	TRACK 2	NA
APPROACH DISTANCE SELECTED	TRACK 1	1100
	TRACK 2	NA
APPROACH DISTANCE COMPUTED	TRACK 1	COMPUTED
	TRACK 2	NA
UAX PICKUP DELAY		NA
NUMBER OF DAXS		0
ISLAND DISTANCE		120
DAX A TRACK ASSIGNMENT		NA
DAX A DISTANCE		NA
DAX A WARNING TIME		NA
DAX B TRACK ASSIGNMENT		NA
DAX B DISTANCE		NA
DAX B WARNING TIME		NA
DAX C TRACK ASSIGNMENT		NA
DAX C DISTANCE		NA
DAX C WARNING TIME		NA
DAX D TRACK ASSIGNMENT		NA
DAX D DISTANCE		NA
DAX D WARNING TIME		NA
MASTER /SLAVE		MASTER
PASSWORD		DISABLED
RECORDER		INSTALLED
RS-232C BAUD RATE		9600
RS-232C DATA BITS		8
RS-232C STOP BITS		1
RS-232C PARITY		NONE
PRIME PRED. OFFSET	TRACK 1	0
	TRACK 2	0
PICKUP DELAY PRIME		20
PICKUP DELAY DAX	DAX A	NA
	DAX B	NA
	DAX C	NA
	DAX D	NA

MODULE REQUIREMENTS

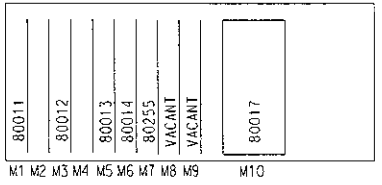

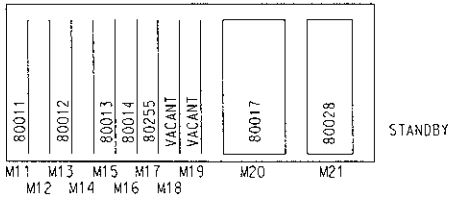

ON MODULE 80028 SET
DIP SWITCHES TO AUTO
TRANSFER TIME FOR 10 MIN.

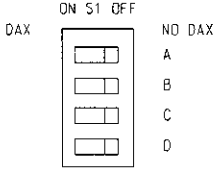

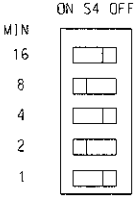

Burns & McDonnell
SINCE 1898

date FEBRUARY 22, 2006
designed J. BIGLAND

PRAIRIE STATE ENERGY CAMPUS

EXHIBIT D (SHEET 2 OF 5)
CROSSING WARNING PLAN
TYPICAL CIRCUITS
IL ROUTE 4/13

Project 35223
Revision No. A
EXH_D1-1

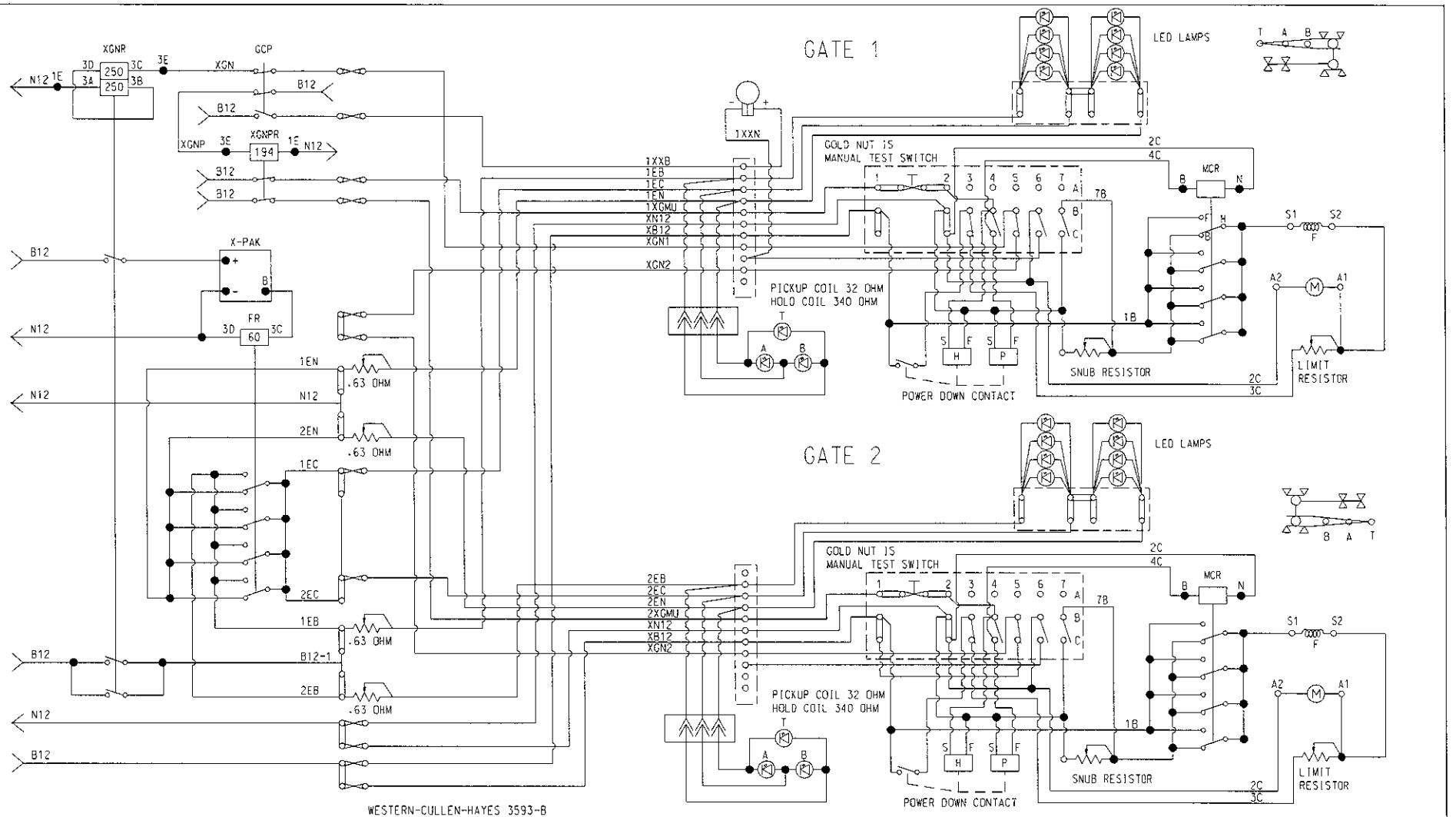

WESTERN-CULLEN-HAYES 3593-B

CONTACT	CLOSED	FUNCTION
3	45° TO 90°	MOTOR DOWN
4	0° TO 89°	MOTOR UP
5	80° TO 90°	IND VERY POS
6	5° - 90°	BELL
7	0° TO 5°	SNUB

CIRCUIT SHOWN WITH GATE IN CLEAR POSTION

Burns & McDonnell SINCE 1898

date JULY 11, 2006

designed J. BIGLAND

PRAIRIE STATE ENERGY CAMPUS

EXHIBIT D (SHEET 3 OF 5)
CROSSING WARNING PLAN
TYPICAL CIRCUITS
IL ROUTE 4/13

Project 35223

Revision No. B

EXH_D1-2

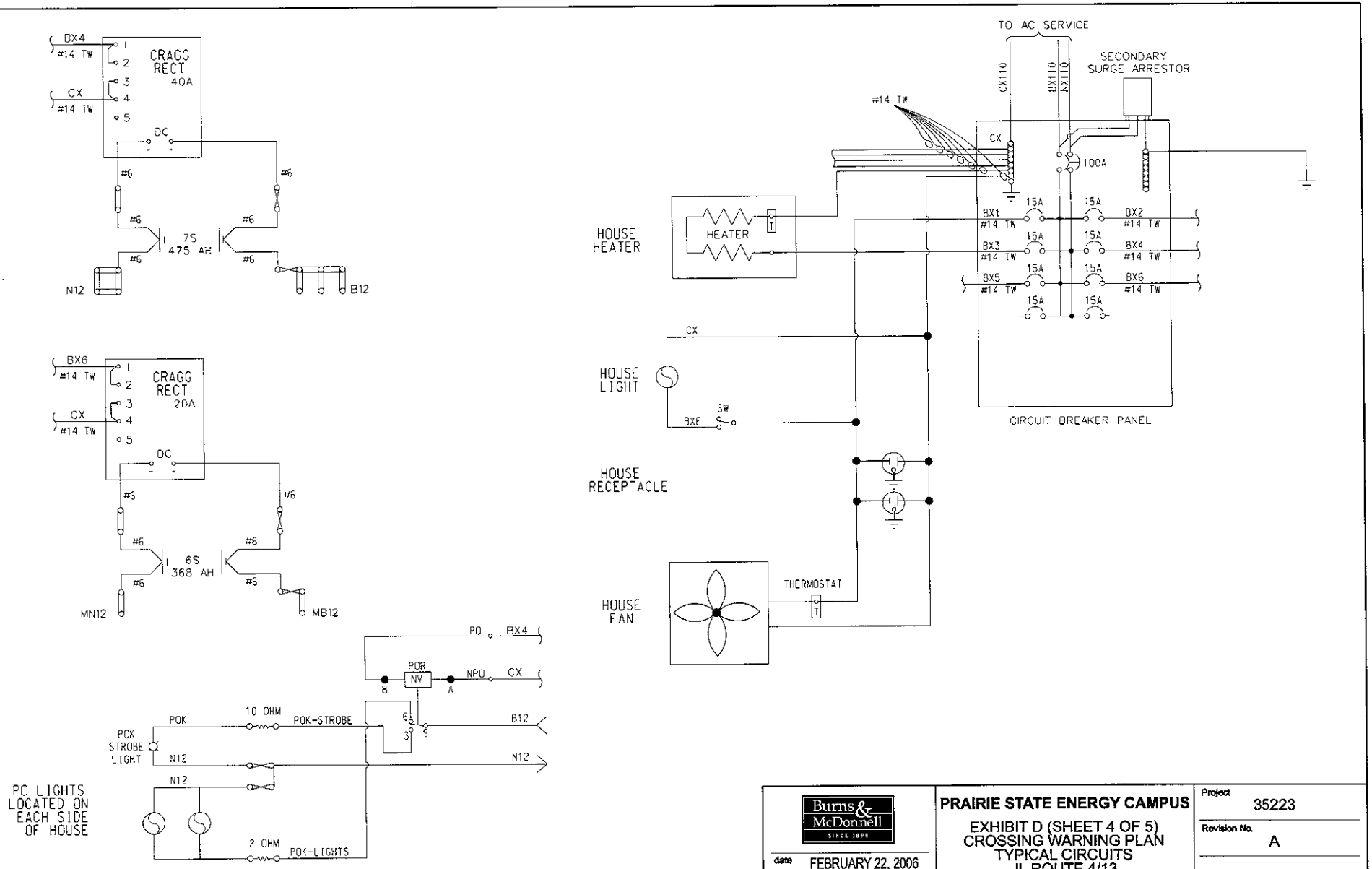

Burns & McDonnell SINCE 1898

date FEBRUARY 22, 2006

designed J. BIGLAND

PRAIRIE STATE ENERGY CAMPUS

EXHIBIT D (SHEET 4 OF 5)
CROSSING WARNING PLAN
TYPICAL CIRCUITS
IL ROUTE 4/13

Project 35223

Revision No. A

EXH_D1-3

LEFT SIDE OF BUNGALOW

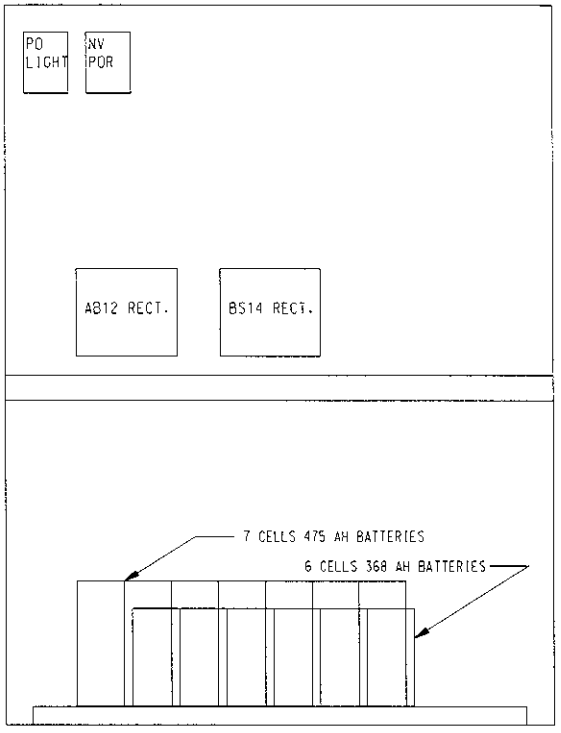

RIGHT SIDE OF BUNGALOW

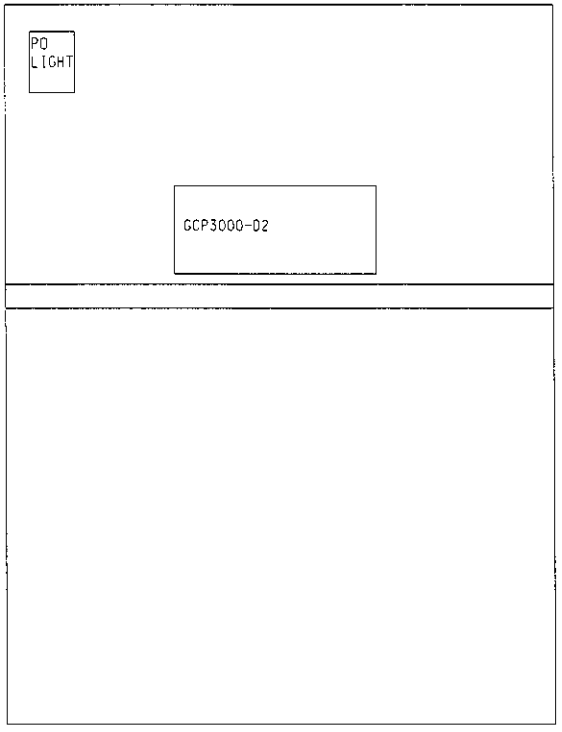

REAR SIDE OF BUNGALOW

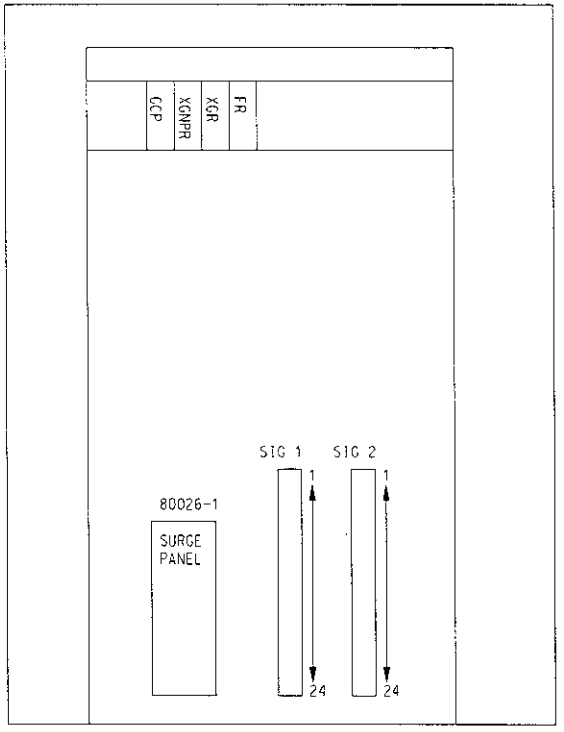

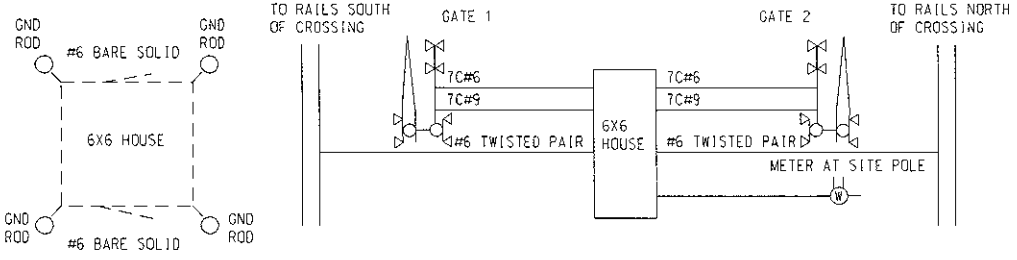

AC CABLE SIZE VERIFIED BY ELECTRICAL CONTRACTOR

Burns & McDonnell SINCE 1898

date JULY 11, 206

designed J. BIGLAND

PRAIRIE STATE ENERGY CAMPUS

EXHIBIT D (SHEET 5 OF 5)
CROSSING WARNING PLAN
TYPICAL CIRCUITS
IL ROUTE 4/13

Project 35223

Revision No. B

EXH_D1-4

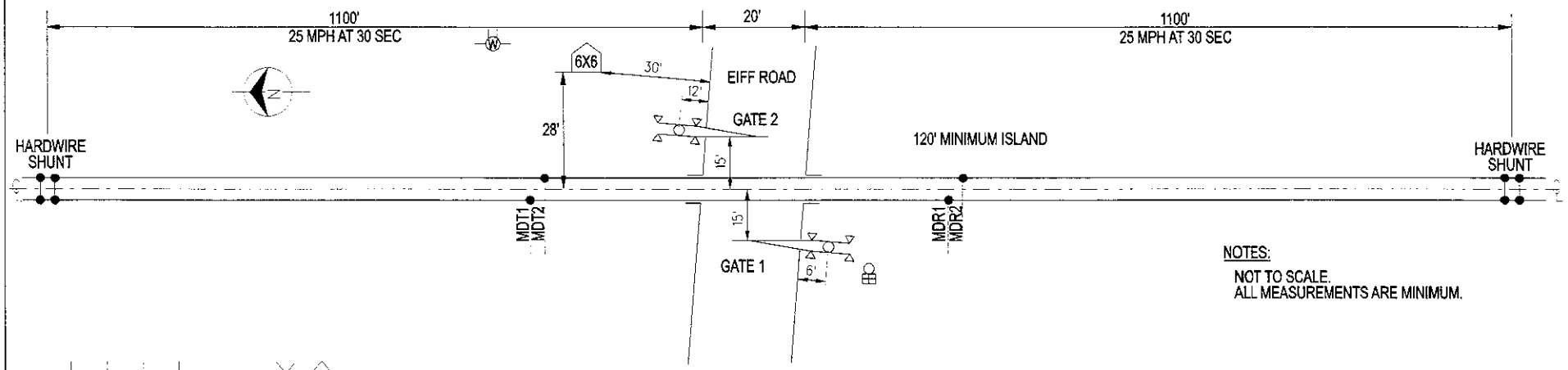

NOTES:

NOT TO SCALE.
ALL MEASUREMENTS ARE MINIMUM.

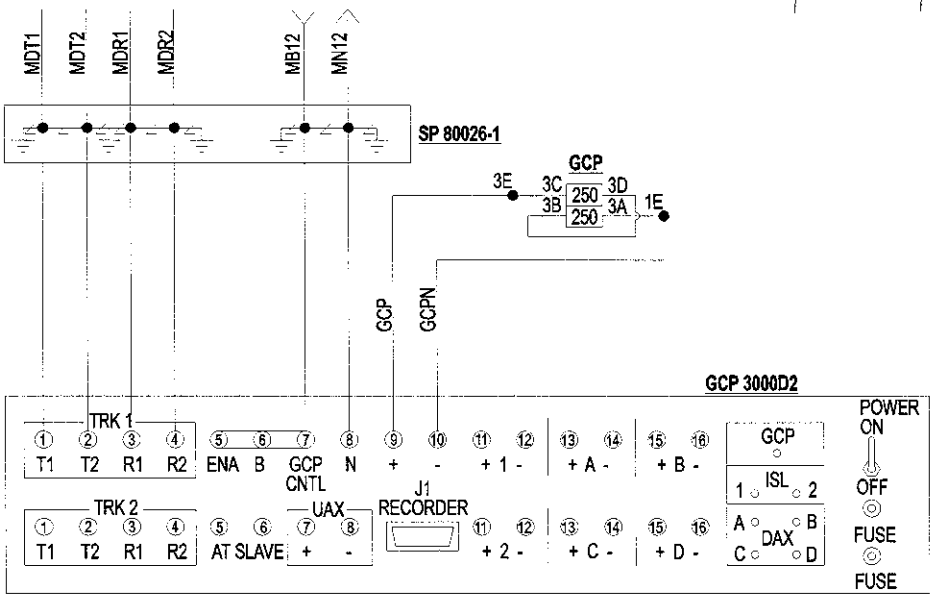

GCP 3000D2

GCP FREQUENCY 430 HZ
ISLAND 1 CARRIER FREQUENCY 7100 HZ

Burns & McDonnell SINCE 1898	**PRAIRIE STATE ENERGY CAMPUS**	Project	35223
	EXHIBIT D (SHEET 1 OF 5)	Revision No.	A
date FEBRUARY 22, 2006	EIFF ROAD	File Name	EXH_D2-0
designed J. BIGLAND	CROSSING WARNING PLAN TYPICAL CIRCUITS		

PROGRAM OPTIONS

OPTION		
NUMBER OF TRACKS		1
FREQUENCY		400 HZ
UNIBI DIRECTION	TRACK 1	BI
	TRACK 2	NA
X-MIT LEVEL	TRACK 1	MAX
	TRACK 2	NA
PREDICTOR/MOTION SENSOR	TRACK 1	PRED
	TRACK 2	NA
WARNING TIME	TRACK 1	30
	TRACK 2	NA
APPROACH DISTANCE SELECTED	TRACK 1	1,000
	TRACK 2	NA
APPROACH DISTANCE COMPUTED	TRACK 1	COMPUTED
	TRACK 2	NA
DAX PICKUP DELAY		NA
NUMBER OF DAXS		0
ISLAND DISTANCE		120
DAX A TRACK ASSIGNMENT		NA
DAX A DISTANCE		NA
DAX A WARNING TIME		NA
DAX B TRACK ASSIGNMENT		NA
DAX B DISTANCE		NA
DAX B WARNING TIME		NA
DAX C TRACK ASSIGNMENT		NA
DAX C DISTANCE		NA
DAX C WARNING TIME		NA
DAX D TRACK ASSIGNMENT		NA
DAX D DISTANCE		NA
DAX D WARNING TIME		NA
MASTER /SLAVE		MASTER
PASSWORD		DISABLED
RECORDER		INSTALLED
RS-232C BAUD RATE		9600
RS-232C DATA BITS		8
RS-232C STOP BITS		1
RS-232C PARITY		NONE
PRIME PRED. OFFSET	TRACK 1	0
	TRACK 2	0
PICKUP DELAY PRIME		20
PICKUP DELAY DAX	DAX A	NA
	DAX B	NA
	DAX C	NA
	DAX D	NA

MODULE REQUIREMENTS

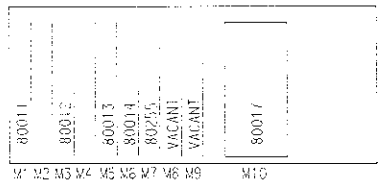

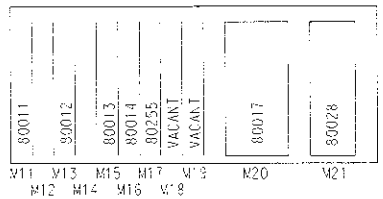

ON MODULE 80028 SET
DIP SWITCHES TO AUTO
TRANSFER TIME FOR 10 MIN.

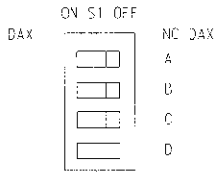

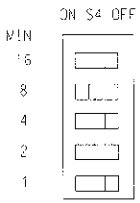

Burns & McDonnell SINCE 1898

date FEBRUARY 22, 2006

designed J. BIGLAND

PRAIRIE STATE ENERGY CAMPUS

EXHIBIT D (SHEET 2 OF 5)
EIFF ROAD
CROSSING WARNING PLAN
TYPICAL CIRCUITS

Project 35223

Revision No. A

EXH_D2-1

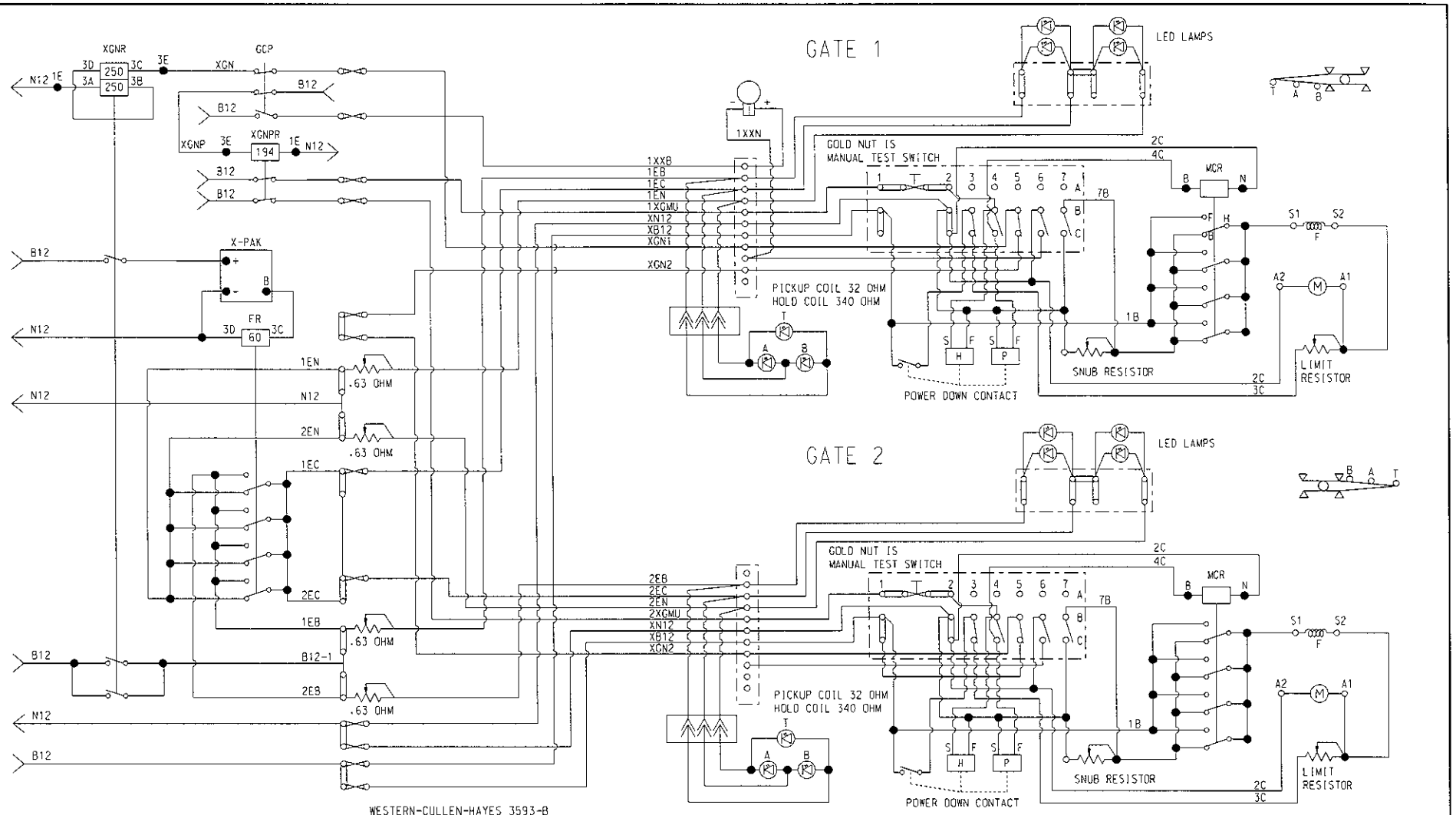

WESTERN-CULLEN-HAYES 3593-B

CONTACT	CLOSED	FUNCTION
3	45° TO 90°	MOTOR DOWN
4	0° TO 89°	MOTOR UP
5	80° TO 90°	IND VERY POS
6	5° - 90°	BELL
7	0° TO 5°	SNUB

CIRCUIT SHOWN WITH GATE IN CLEAR POSTION

Burns & McDonnell SINCE 1898

date FEBRUARY 22, 2006

designed J. BIGLAND

PRAIRIE STATE ENERGY CAMPUS

EXHIBIT D (SHEET 3 OF 5)
EIFF ROAD
CROSSING WARNING PLAN
TYPICAL CIRCUITS

Project 35223

Revision No. A

EXH_D2-2

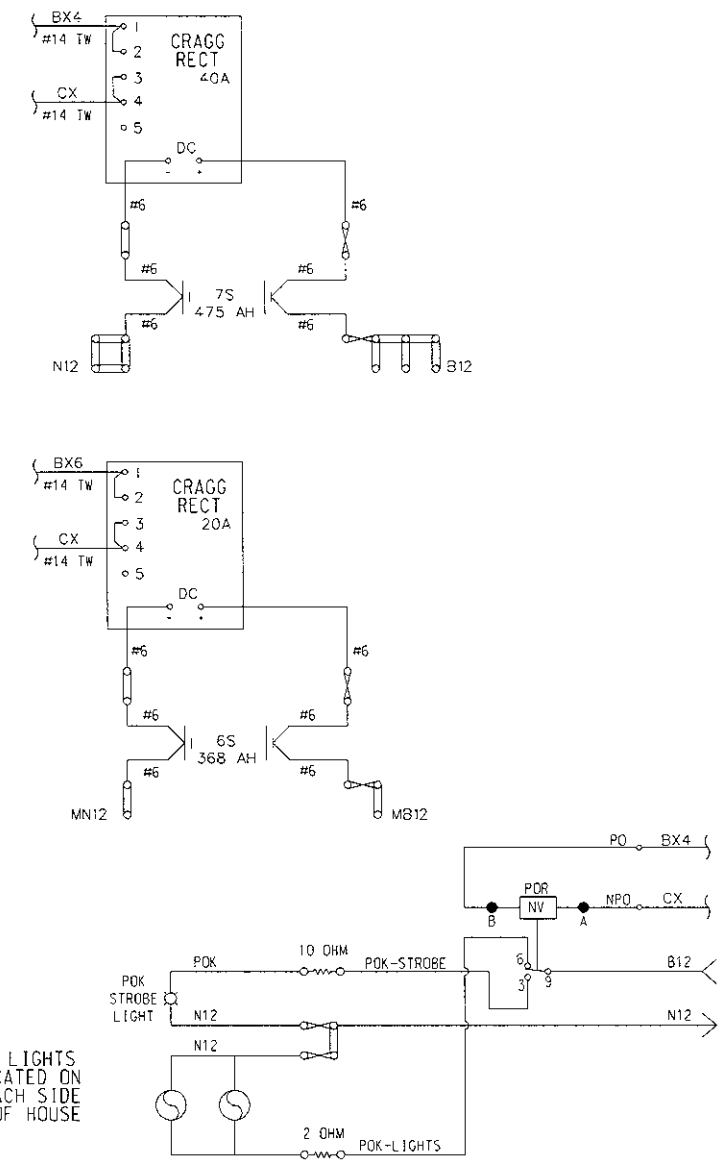

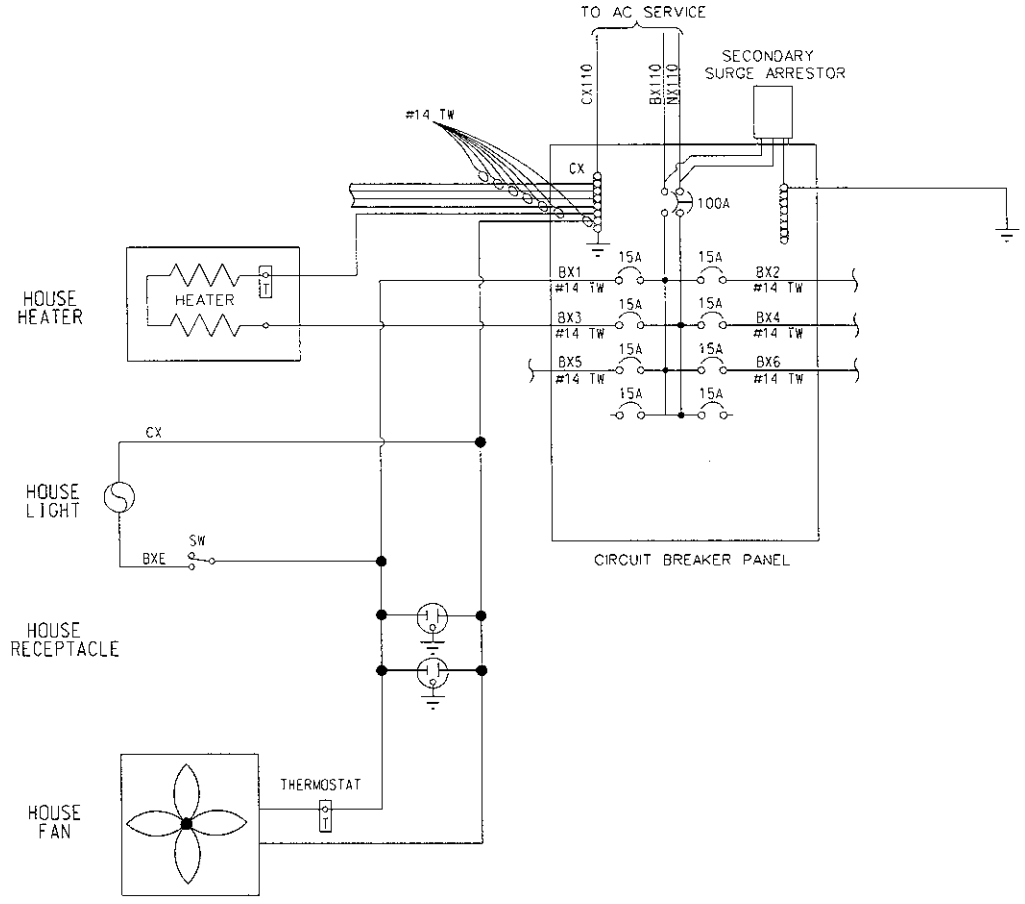

Burns & McDonnell
SINCE 1898

date FEBRUARY 22, 2006
designed J. BIGLAND

PRAIRIE STATE ENERGY CAMPUS

EXHIBIT D (SHEET 4 OF 5)
EIFF ROAD
CROSSING WARNING PLAN
TYPICAL CIRCUITS

Project 35223
Revision No. A
EXH_D2-3

LEFT SIDE OF BUNGALOW

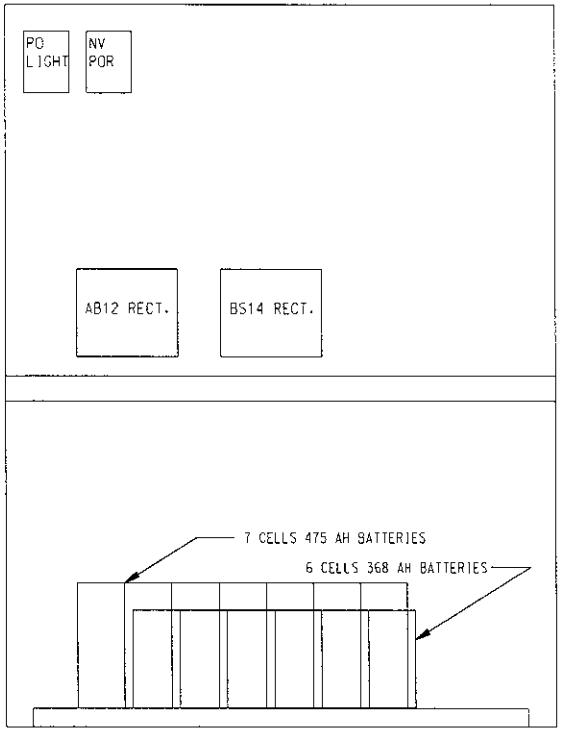

RIGHT SIDE OF BUNGALOW

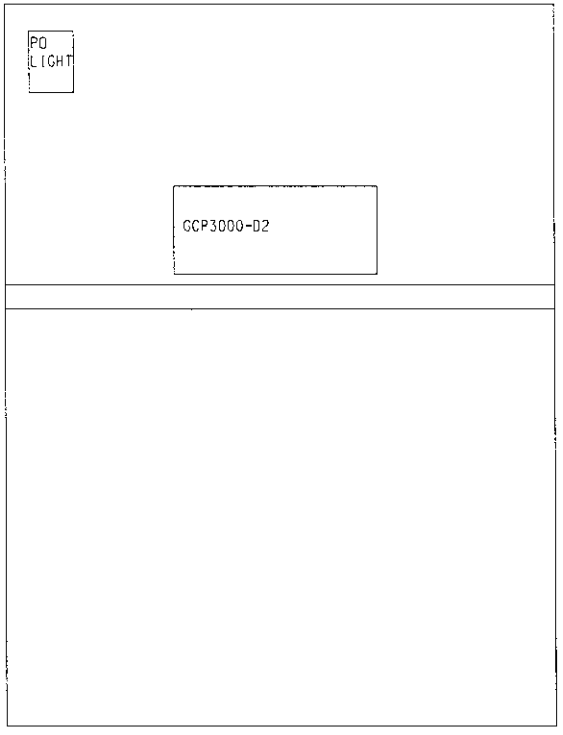

REAR SIDE OF BUNGALOW

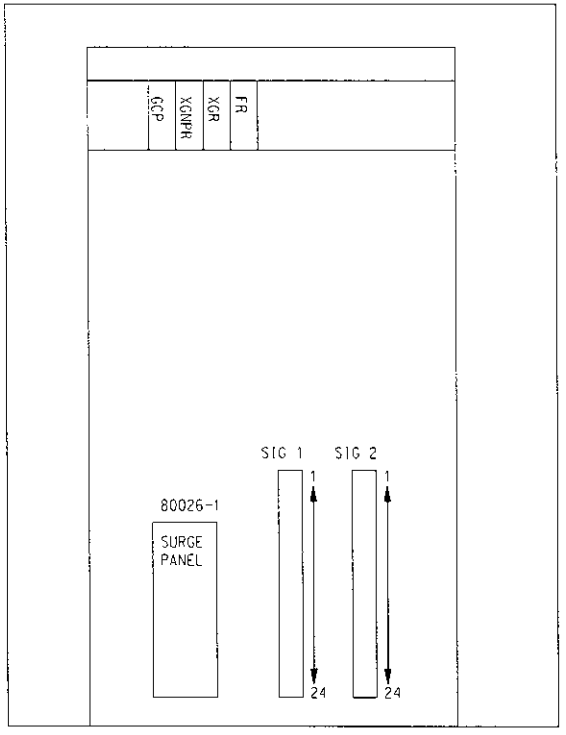

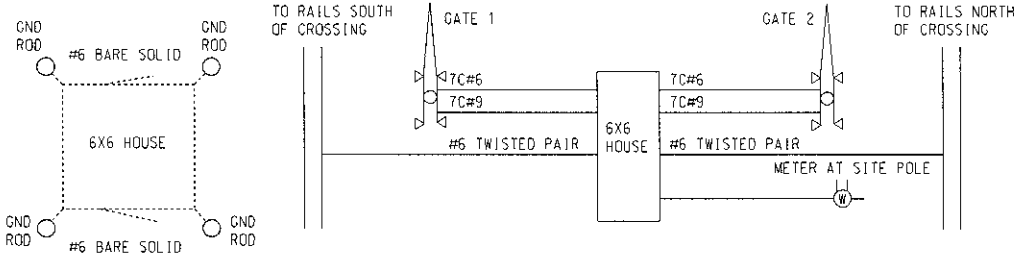

AC CABLE SIZE VERIFIED BY ELECTRICAL CONTRACTOR

Burns & McDonnell SINCE 1898

date FEBRUARY 22, 2006

designed J. BIGLAND

PRAIRIE STATE ENERGY CAMPUS

EXHIBIT D (SHEET 5 OF 5)
EIFF ROAD
CROSSING WARNING PLAN
TYPICAL CIRCUITS

Project 35223

Revision No. A

EXH_D2-4

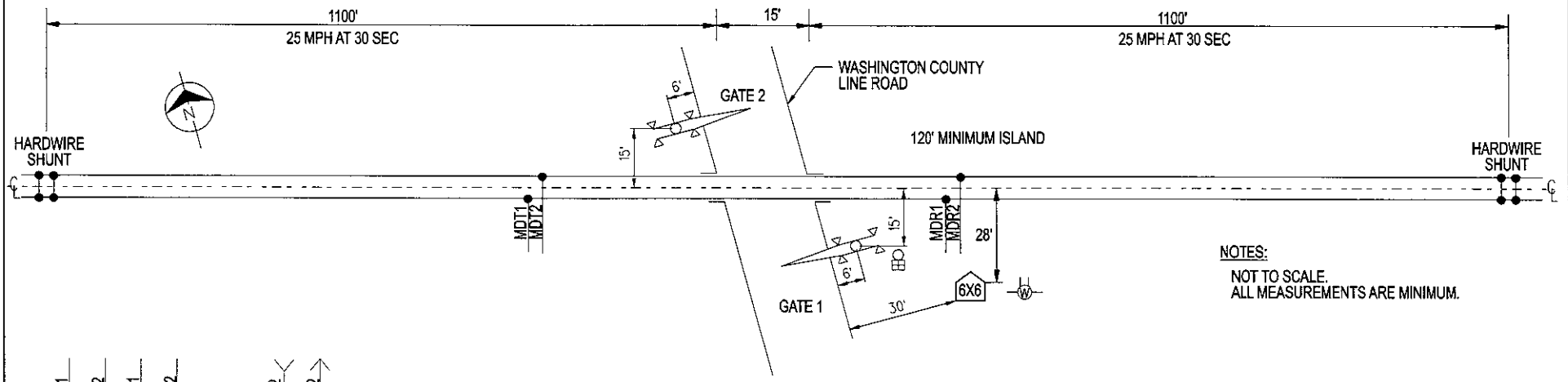

NOTES:

NOT TO SCALE.
ALL MEASUREMENTS ARE MINIMUM.

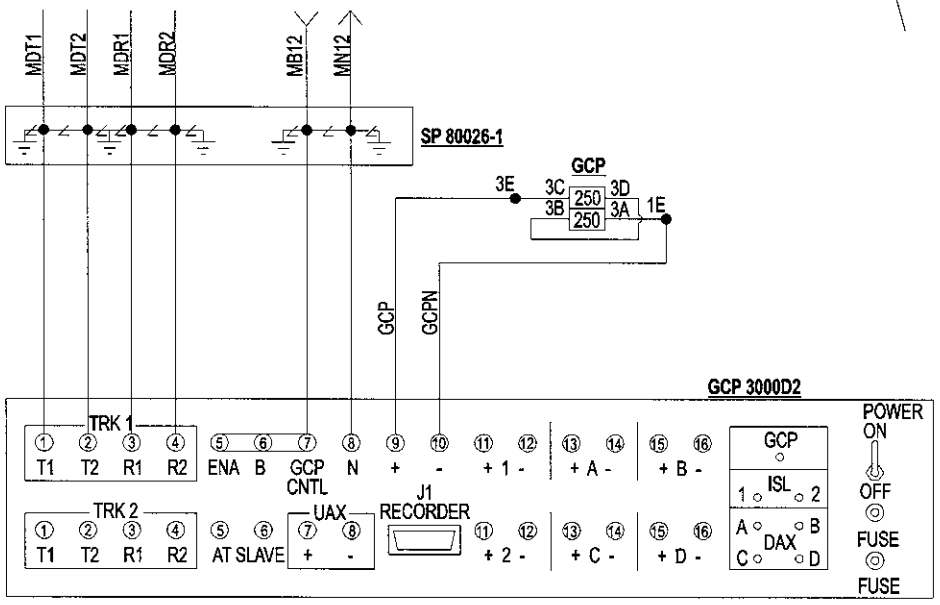

GCP 3000D2

GCP FREQUENCY 430 HZ
ISLAND 1 CARRIER FREQUENCY 7100 HZ

Burns & McDonnell SINCE 1898	**PRAIRIE STATE ENERGY CAMPUS**	Project 35223
date FEBRUARY 22, 2006	EXHIBIT D (SHEET 1 OF 5)	Revision No. A
designed J. BIGLAND	WASHINGTON COUNTY LINE ROAD CROSSING WARNING PLAN TYPICAL CIRCUITS	File Name EXH_D3-0

PROGRAM OPTIONS

OPTION		
NUMBER OF TRACKS		1
FREQUENCY		430 HZ
UNI/BI DIRECTION	TRACK 1	BI
	TRACK 2	NA
X-MIT LEVEL	TRACK 1	MAX
	TRACK 2	NA
PREDICTOR/MOTION SENSOR	TRACK 1	PRED
	TRACK 2	NA
WARNING TIME	TRACK 1	30
	TRACK 2	NA
APPROACH DISTANCE SELECTED	TRACK 1	1100
	TRACK 2	NA
APPROACH DISTANCE COMPUTED	TRACK 1	COMPUTED
	TRACK 2	NA
UAX PICKUP DELAY		NA
NUMBER OF DAXS		0
ISLAND DISTANCE		120
DAX A TRACK ASSIGNMENT		NA
DAX A DISTANCE		NA
DAX A WARNING TIME		NA
DAX B TRACK ASSIGNMENT		NA
DAX B DISTANCE		NA
DAX B WARNING TIME		NA
DAX C TRACK ASSIGNMENT		NA
DAX C DISTANCE		NA
DAX C WARNING TIME		NA
DAX D TRACK ASSIGNMENT		NA
DAX D DISTANCE		NA
DAX D WARNING TIME		NA
MASTER /SLAVE		MASTER
PASSWORD		DISABLED
RECORDER		INSTALLED
RS-232C BAUD RATE		9600
RS-232C DATA BITS		8
RS-232C STOP BITS		1
RS-232C PARITY		NONE
PRIME PRED. OFFSET	TRACK 1	0
	TRACK 2	0
PICKUP DELAY PRIME		20
PICKUP DELAY DAX	DAX A	NA
	DAX B	NA
	DAX C	NA
	DAX D	NA

MODULE REQUIREMENTS

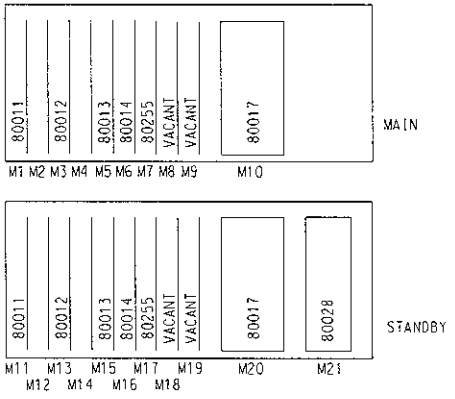

ON MODULE 80028 SET
DIP SWITCHES TO AUTO
TRANSFER TIME FOR 10 MIN.

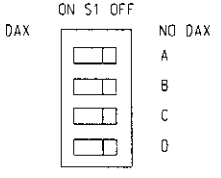

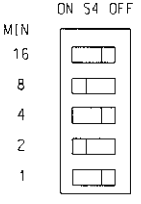

Burns & McDonnell
SINCE 1898

date FEBRUARY 22, 2006
designed J. BIGLAND

PRAIRIE STATE ENERGY CAMPUS

EXHIBIT D (SHEET 2 OF 5)
WASHINGTON COUNTY LINE ROAD
CROSSING WARNING PLAN
TYPICAL CIRCUITS

Project 35223
Revision No. A
EXH_D3-1

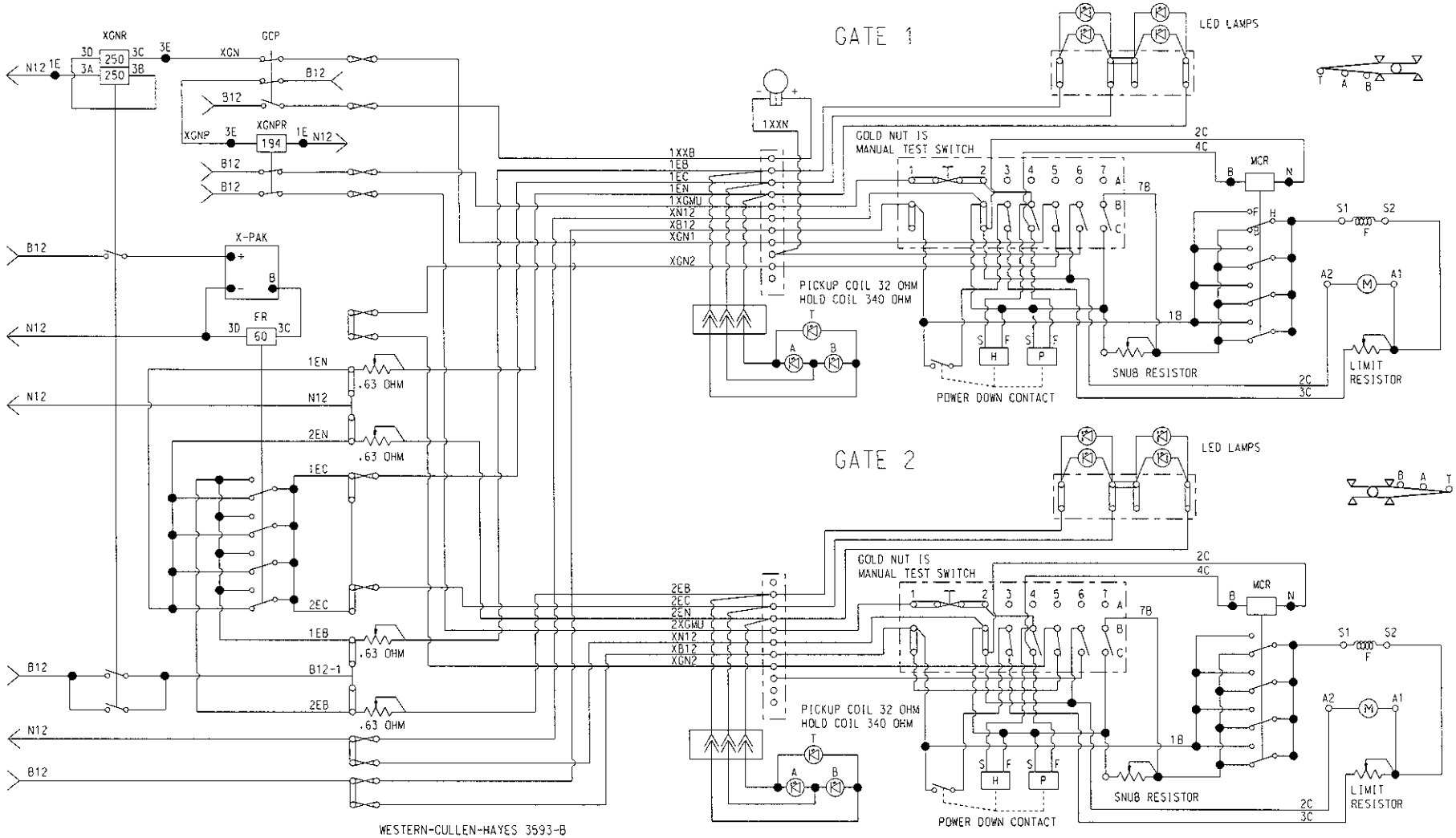

WESTERN-CULLEN-HAYES 3593-B

CONTACT	CLOSED	FUNCTION
3	45° TO 90°	MOTOR DOWN
4	0° TO 89°	MOTOR UP
5	80° TO 90°	IND VERY POS
6	5° - 90°	BELL
7	0° TO 5°	SNUB

CIRCUIT SHOWN WITH GATE IN CLEAR POSTION

Burns & McDonnell SINCE 1898

date FEBRUARY 22, 2006

designed J. BIGLAND

PRAIRIE STATE ENERGY CAMPUS

EXHIBIT D (SHEET 3 OF 5)
WASHINGTON COUNTY LINE ROAD
CROSSING WARNING PLAN
TYPICAL CIRCUITS

Project 35223

Revision No. A

EXH_D3-2

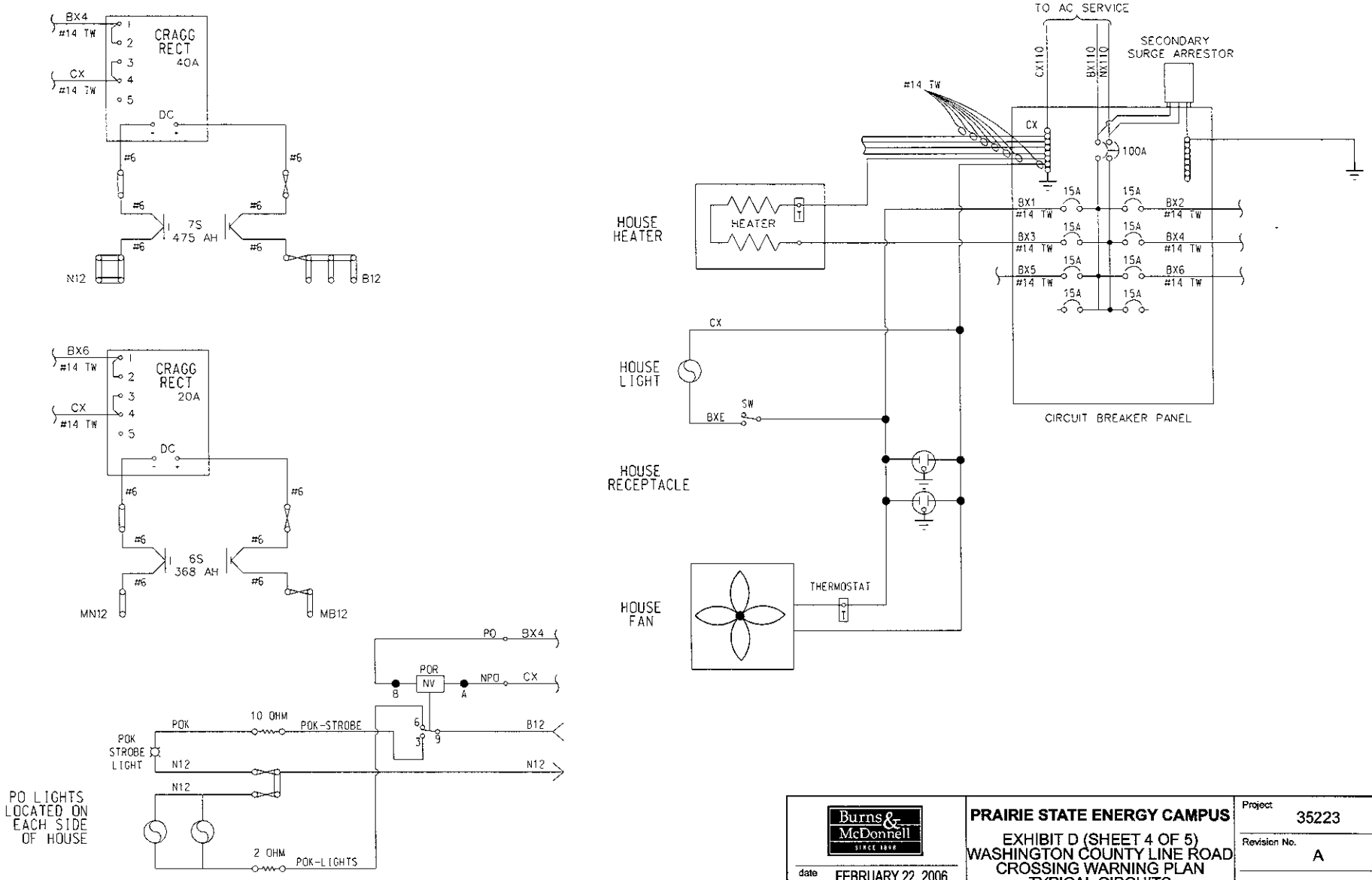

Burns & McDonnell
SINCE 1898

date FEBRUARY 22, 2006
designed J. BIGLAND

PRAIRIE STATE ENERGY CAMPUS

EXHIBIT D (SHEET 4 OF 5)
WASHINGTON COUNTY LINE ROAD
CROSSING WARNING PLAN
TYPICAL CIRCUITS

Project 35223
Revision No. A
EXH_D3-3

LEFT SIDE OF BUNGALOW

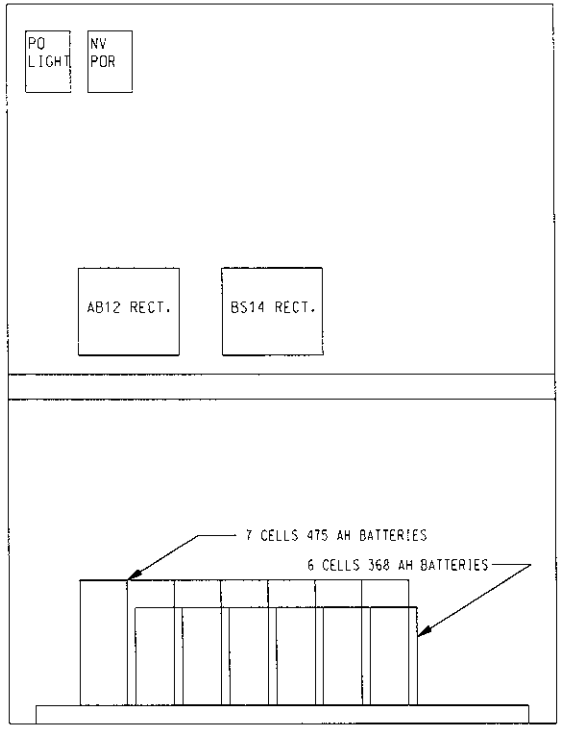

RIGHT SIDE OF BUNGALOW

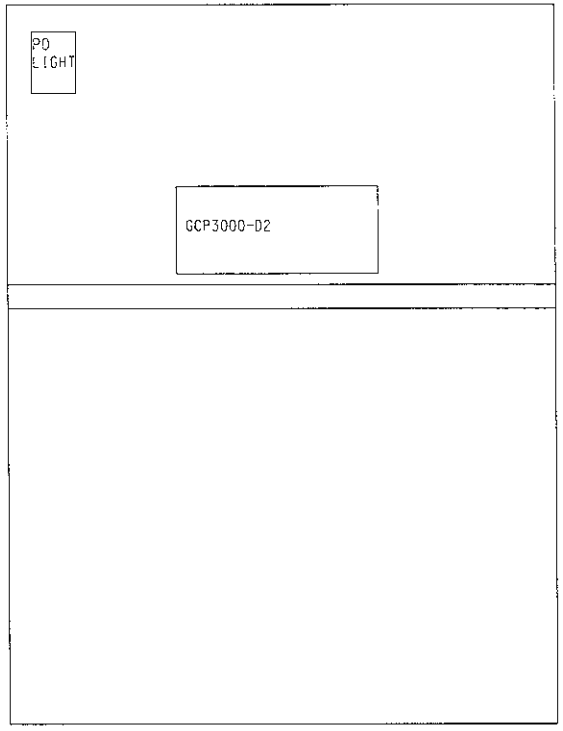

REAR SIDE OF BUNGALOW

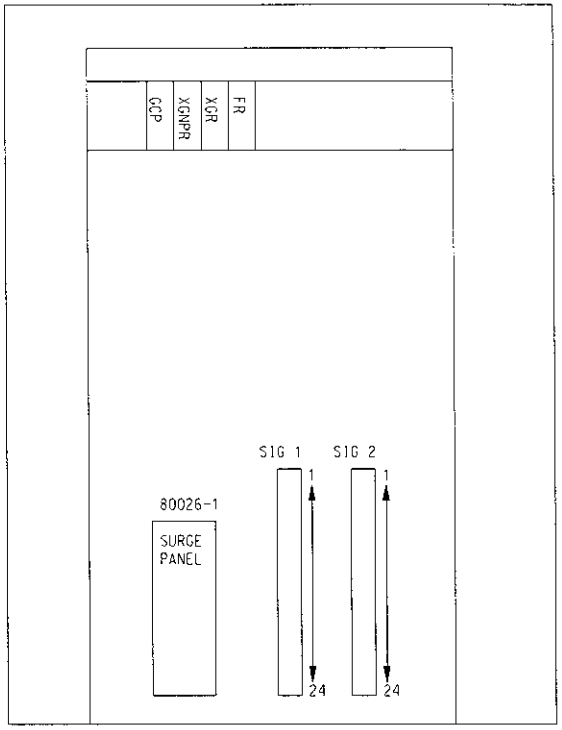

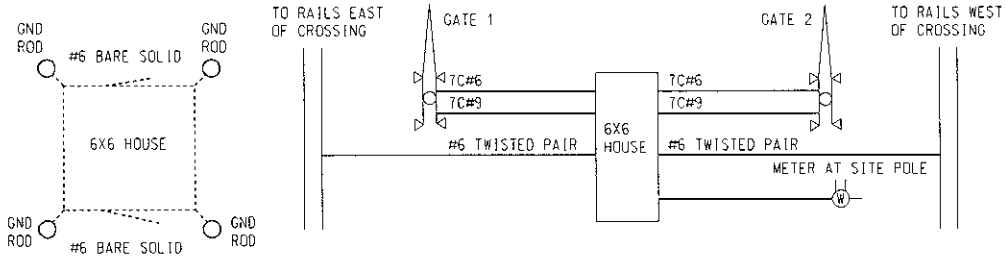

AC CABLE SIZE VERIFIED BY ELECTRICAL CONTRACTOR

Burns & McDonnell SINCE 1898

date FEBRUARY 22, 2006

designed J. BIGLAND

PRAIRIE STATE ENERGY CAMPUS

EXHIBIT D (SHEET 5 OF 5)
WASHINGTON COUNTY LINE ROAD
CROSSING WARNING PLAN
TYPICAL CIRCUITS

Project 35223

Revision No. A

EXH_D3-4

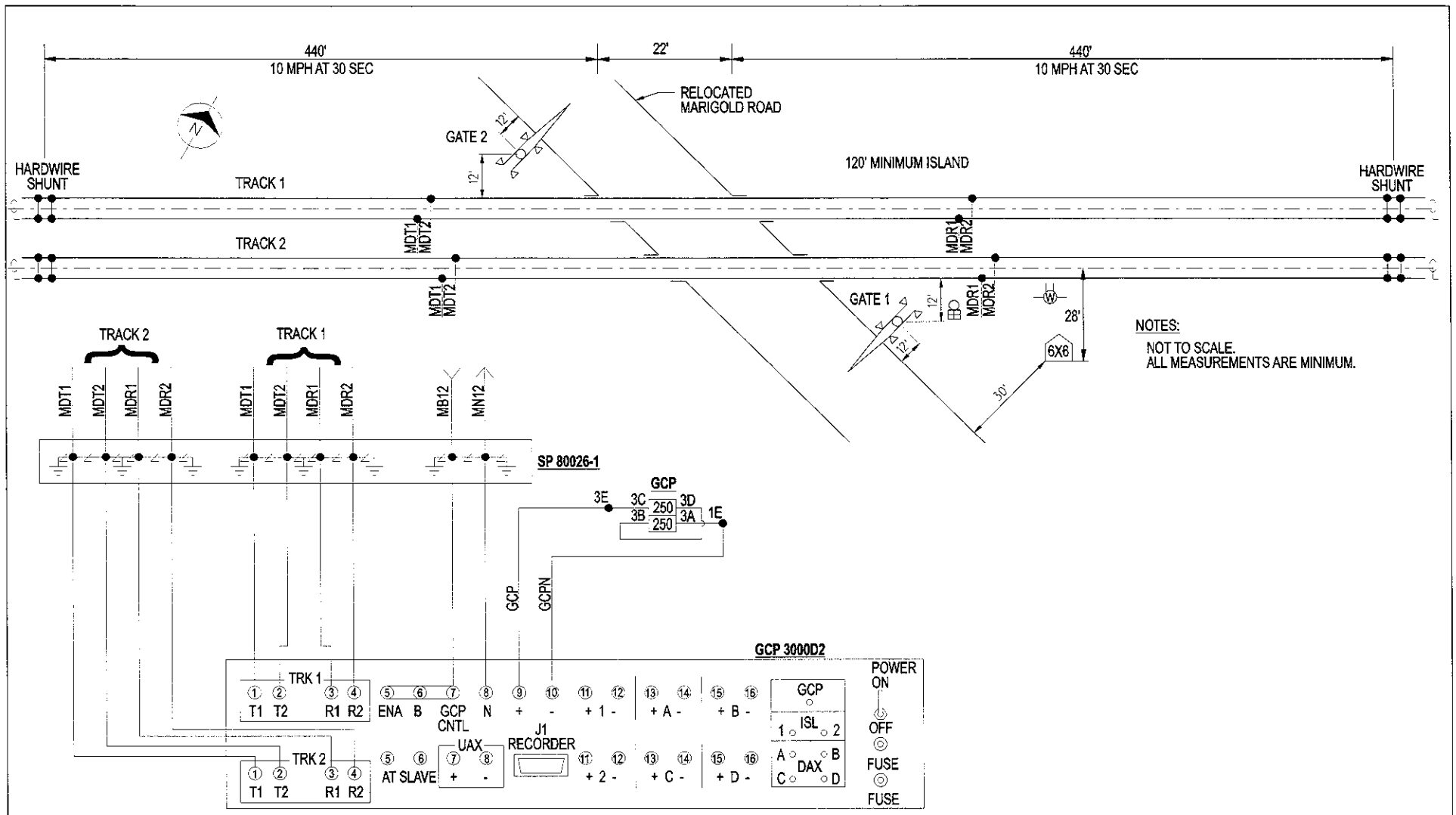

GCP 3000D2

GCP FREQUENCY 430 HZ
ISLAND 1 CARRIER FREQUENCY 7100 HZ

Burns & McDonnell
SINCE 1898

Date FEBRUARY 22, 2006
Designed J. BIGLAND

PRAIRIE STATE ENERGY CAMPUS

EXHIBIT D (SHEET 1 OF 5)
RELOCATED MARIGOLD ROAD
CROSSING WARNING PLAN
TYPICAL CIRCUITS

Project 35223
Revision No. A
File Name EXH_D4-0

PROGRAM OPTIONS

OPTION		
NUMBER OF TRACKS		2
FREQUENCY		430 HZ
UNI/BI DIRECTION	TRACK 1	BI
	TRACK 2	BI
X-MIT LEVEL	TRACK 1	MAX
	TRACK 2	MAX
PREDICTOR/MOTION SENSOR	TRACK 1	PRED
	TRACK 2	PRED
WARNING TIME	TRACK 1	30
	TRACK 2	30
APPROACH DISTANCE SELECTED	TRACK 1	440
	TRACK 2	440
APPROACH DISTANCE COMPUTED	TRACK 1	COMPUTED
	TRACK 2	COMPUTED
UAX PICKUP DELAY		NA
NUMBER OF DAXS		0
ISLAND DISTANCE		120
DAX A TRACK ASSIGNMENT		NA
DAX A DISTANCE		NA
DAX A WARNING TIME		NA
DAX B TRACK ASSIGNMENT		NA
DAX B DISTANCE		NA
DAX B WARNING TIME		NA
DAX C TRACK ASSIGNMENT		NA
DAX C DISTANCE		NA
DAX C WARNING TIME		NA
DAX D TRACK ASSIGNMENT		NA
DAX D DISTANCE		NA
DAX D WARNING TIME		NA
MASTER /SLAVE		MASTER
PASSWORD		DISABLED
RECORDER		INSTALLED
RS-232C BAUD RATE		9600
RS-232C DATA BITS		8
RS-232C STOP BITS		1
RS-232C PARITY		NONE
PRIME PRED. OFFSET	TRACK 1	0
	TRACK 2	0
PICKUP DELAY PRIME		20
PICKUP DELAY DAX	DAX A	NA
	DAX B	NA
	DAX C	NA
	DAX D	NA

MODULE REQUIREMENTS

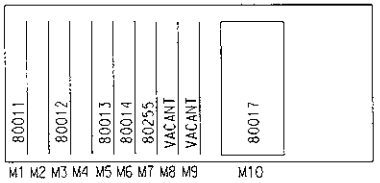

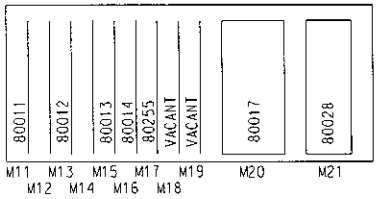

ON MODULE 80028 SET
DIP SWITCHES TO AUTO
TRANSFER TIME FOR 10 MIN.

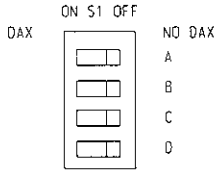

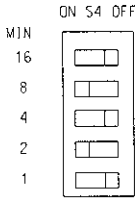

Burns & McDonnell
SINCE 1898

date FEBRUARY 22, 2006
designed J. BIGLAND

PRAIRIE STATE ENERGY CAMPUS

EXHIBIT D (SHEET 2 OF 5)
RELOCATED MARIGOLD ROAD
CROSSING WARNING PLAN
TYPICAL CIRCUITS

Project 35223
Revision No. A
EXH_D4-1

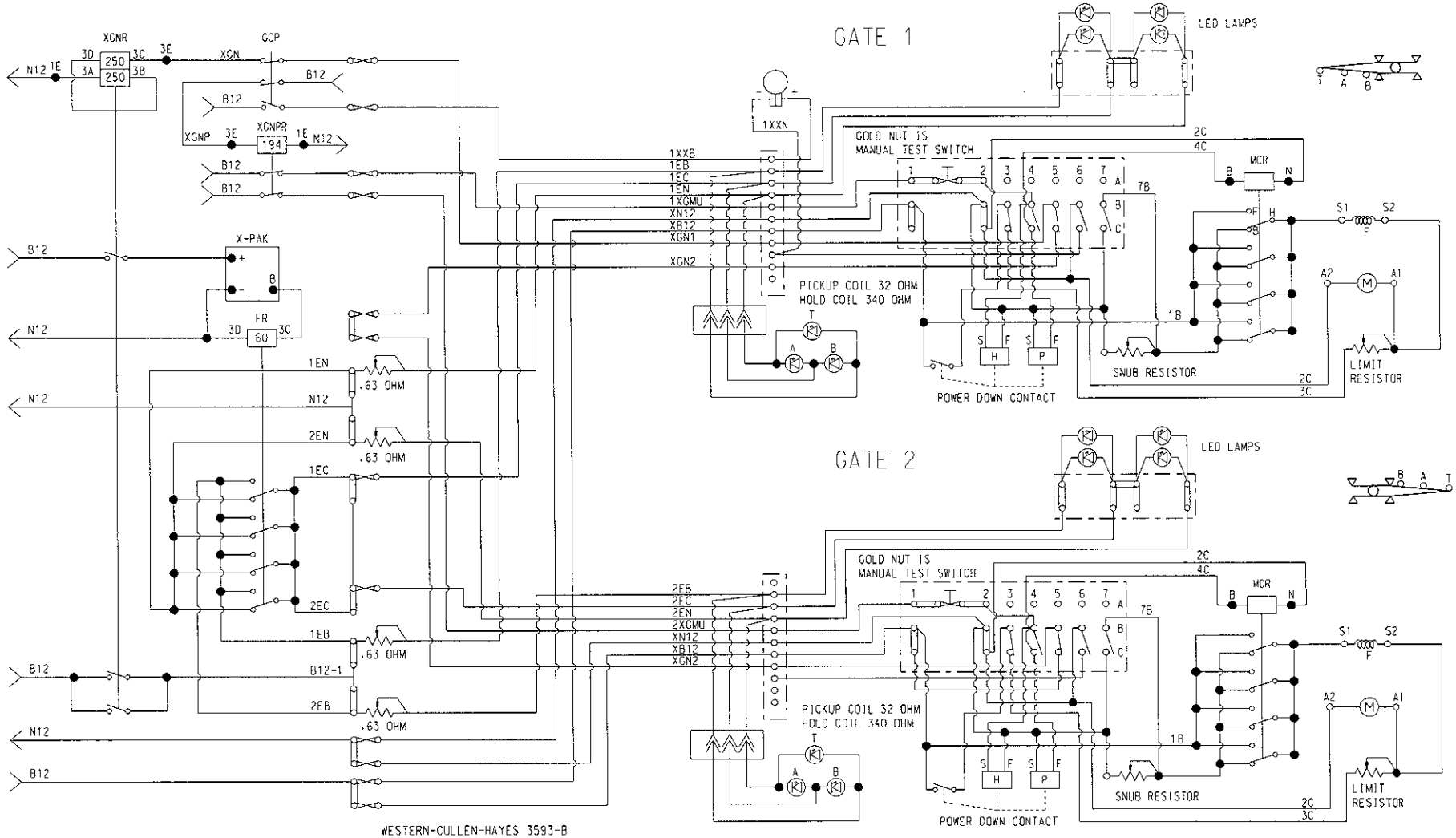

WESTERN-CULLEN-HAYES 3593-B

CONTACT	CLOSED	FUNCTION
3	45° TO 90°	MOTOR DOWN
4	0° TO 89°	MOTOR UP
5	80° TO 90°	IND VERY POS
6	5° - 90°	BELL
7	0° TO 5°	SNUB

CIRCUIT SHOWN WITH GATE IN CLEAR POSTION

Burns & McDonnell SINCE 1898

date FEBRUARY 22, 2006

designed J. BIGLAND

PRAIRIE STATE ENERGY CAMPUS

EXHIBIT D (SHEET 3 OF 5)
RELOCATED MARIGOLD ROAD
CROSSING WARNING PLAN
TYPICAL CIRCUITS

Project 35223

Revision No. A

EXH_D4-2

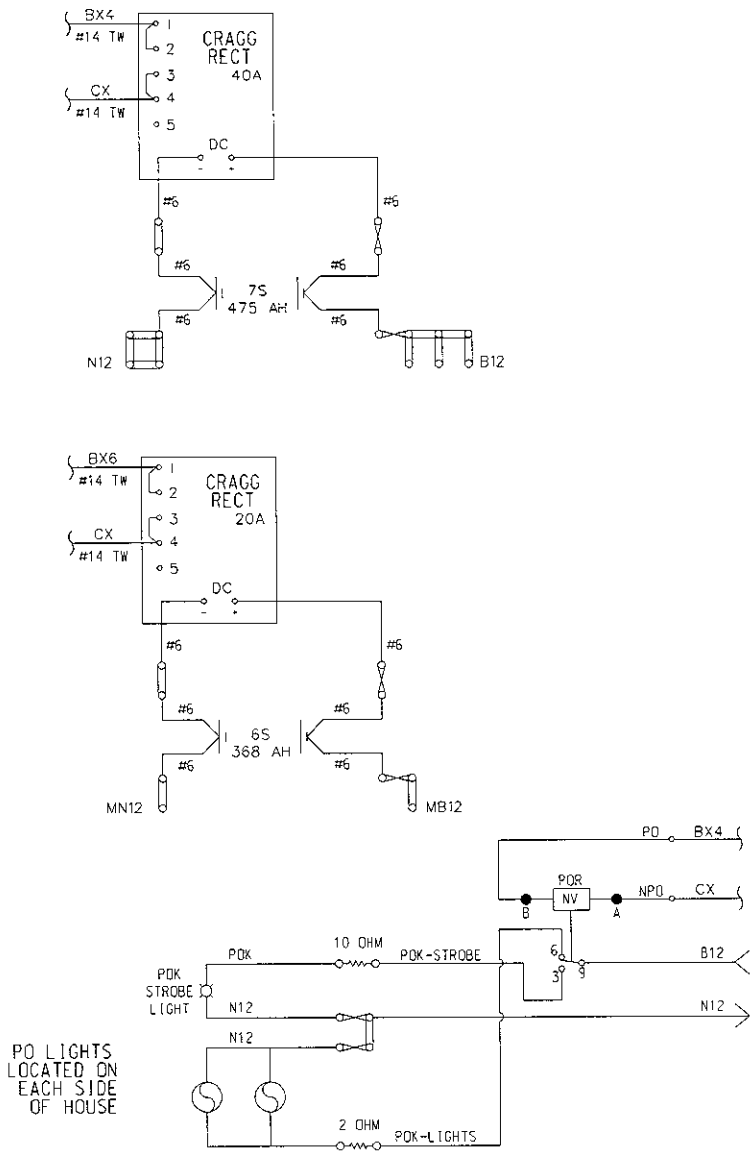

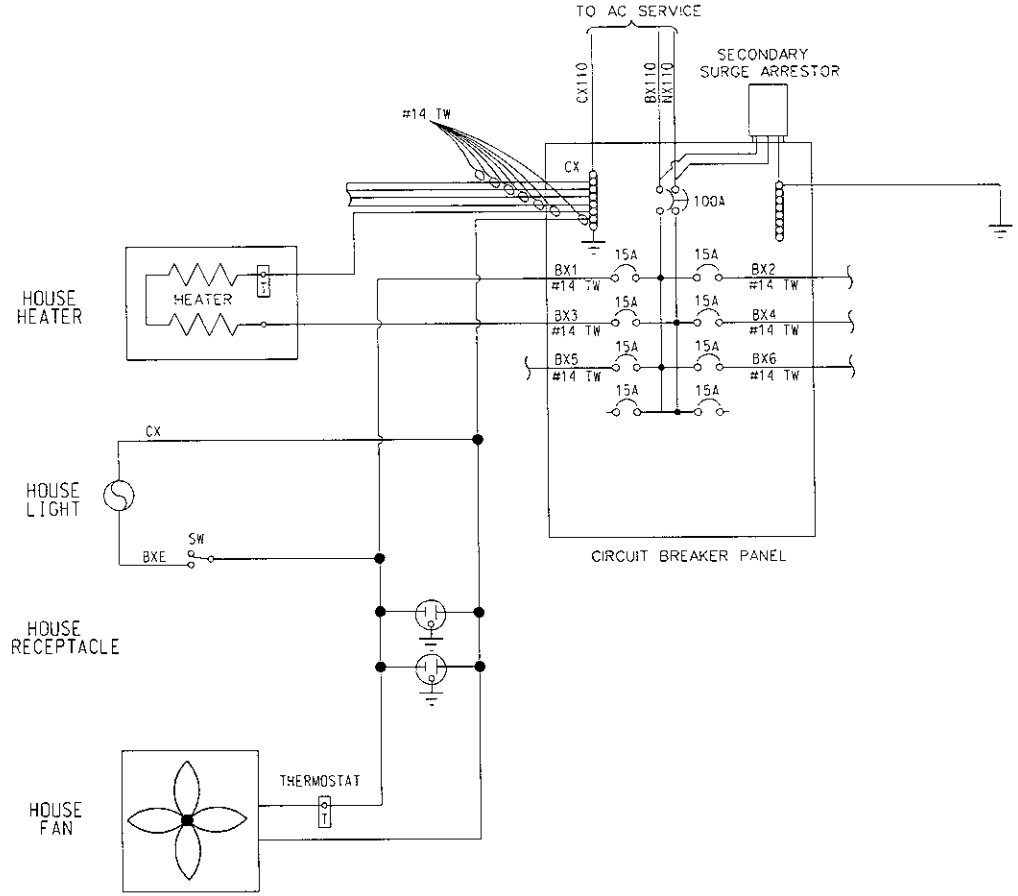

Burns & McDonnell SINCE 1898	**PRAIRIE STATE ENERGY CAMPUS**	Project 35223
date FEBRUARY 22, 2006	EXHIBIT D (SHEET 4 OF 5) RELOCATED MARIGOLD ROAD CROSSING WARNING PLAN TYPICAL CIRCUITS	Revision No. A
designed J. BIGLAND		EXH_D4-3

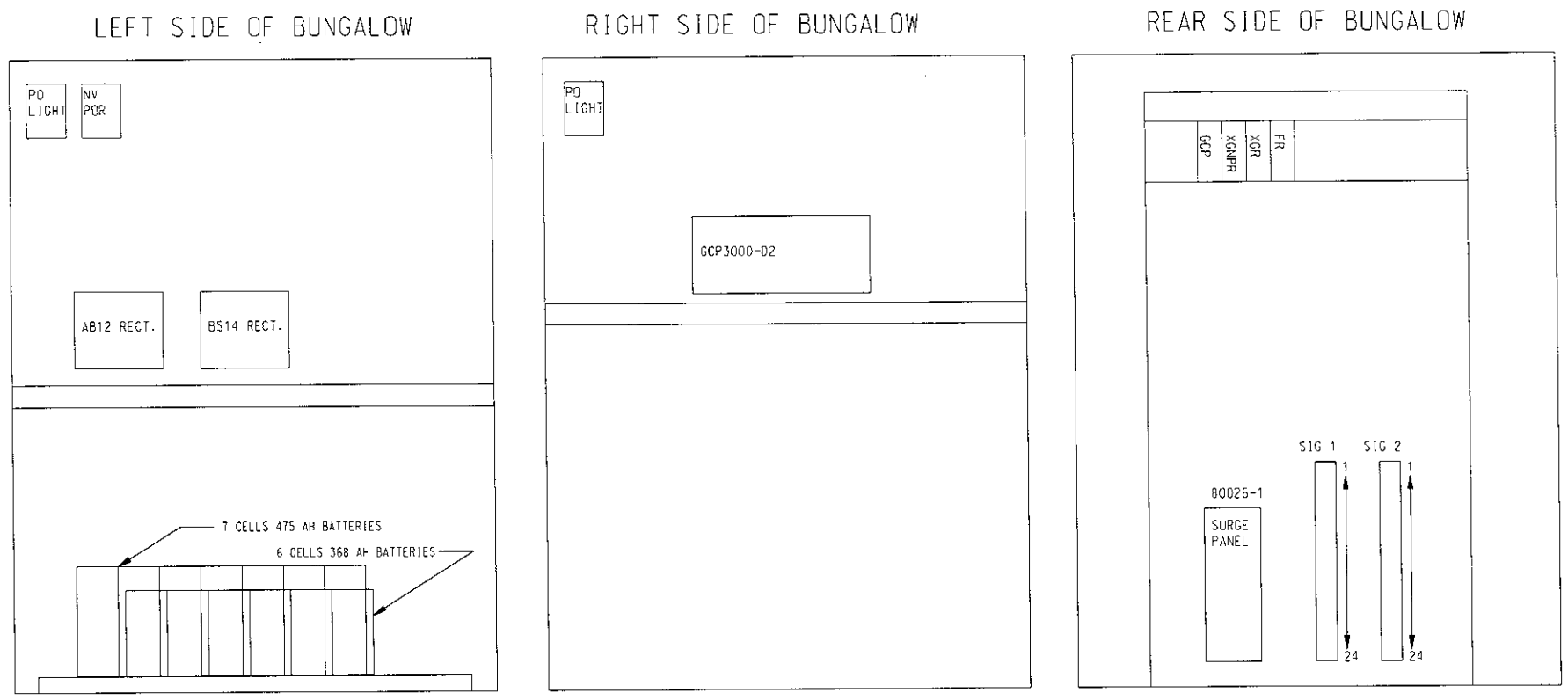

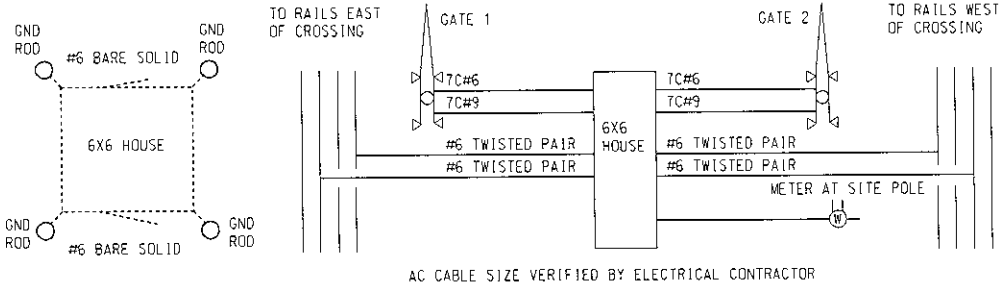

AC CABLE SIZE VERIFIED BY ELECTRICAL CONTRACTOR

Burns & McDonnell SINCE 1898

date FEBRUARY 22, 2006

designed J. BIGLAND

PRAIRIE STATE ENERGY CAMPUS

EXHIBIT D (SHEET 5 OF 5)
RELOCATED MARIGOLD ROAD
CROSSING WARNING PLAN
TYPICAL CIRCUITS

Project 35223

Revision No. A

EXH_D4-4