STATE OF ILLINOIS
ILLINOIS COMMERCE COMMISSION

In the Matter of	)	
	)	
Proposed Revision to the Collocation Tariffs	)	**Docket No. 05-0675**
to Eliminate Charges for DC Power on a	)	
Per Kilowatt-hour Basis and to Implement	)	
Charging on a Per Amp Basis	)	

INITIAL BRIEF OF AT&T ILLINOIS

PUBLIC VERSION

Mark R. Ortlieb
John J. Reidy III
Illinois Bell Telephone Company
225 West Randolph Street, Floor 25D
Chicago, Illinois 60606
(312) 727-2415
(312) 727-1216

Dated: May 2, 2006

TABLE OF CONTENTS

I. INTRODUCTION.....1

II. RETURN-SIDE METERING IS AN UNDISPUTED FAILURE 5

A. THE ORIGINS OF RETURN-SIDE POWER METERING IN ILLINOIS 5

B. RETURN-SIDE POWER METERING FAILS TO MEASURE 30-50% OF THE DC POWER THAT CLECS CONSUME 9

C. AT&T ILLINOIS' LOSSES ARE $25,000,000 AND GROWING.....12

D. OTHER OPERATIONAL PROBLEMS MAKE RETURN-SIDE POWER METERING UNWORKABLE.....14

E. THERE IS GENERAL CONCENSUS THAT RETURN-SIDE POWER METERING DOES NOT WORK AND MUST BE REPLACED 15

III. AT&T ILLINOIS' "PER AMP" TARIFF PROPOSAL IS REASONABLE AND SHOULD BE APPROVED 16

A. THE "PER AMP" PROPOSAL.....16

B. THE "PER AMP" PROPOSAL SATISFIES THE RELEVANT POLICY OBJECTIVES 22

C. THE "PER AMP" PROPOSAL IS CONSISTENT WITH THE WAY POWER IS BILLED IN OTHER STATES. 25

D. AT&T ILLINOIS' PER AMP PROPOSAL DOES NOT ALTER A COLLOCATOR'S POWER COST. 31

1. The Five-Amp Minimum Charge Explains Any Billing Differential..33

2. Claims Of Exorbitant Increases Are Erroneous. 36

IV. THE DISPUTED LANGUAGE IN SCHEDULE RAS-14 SHOULD BE RESOLVED IN FAVOR OF AT&T ILLINOIS.....40

1. Language Dispute 1: Should The Initial Self-Certification For *Existing* Arrangements Be Completed Within 180 Days Or 90 Days?42

2. Language Dispute 2: Should The Initial Self-Certification For *New* Arrangements Be Completed Within 90 Days Or 30 Days? 44

3. Language Dispute 3: Should The CLEC Self-Certification Be Based On A Physical Site, Measured Verification? 47

4. Language Dispute 4: Should CLECs Be Required To Self-Certify Once A Year Or Twice A Year? 47

5. Language Dispute 5: Should AT&T Illinois Be Required To Offer A Service To CLECs In Which It Measures Usage At Power Delivery Arrangements? 50

6. Language Dispute 6: Should The First Paragraph Of Paragraph 16A State That The Certification Will Contain A Statement Signed By A Responsible Officer Of The Collocator? 52

7. Language Dispute 7: Should There Be A 5 Amp Minimum For Power Delivery Arrangements Served From The BDFB? 53

8. Language Dispute 8: Should There Be A 51 Amp Minimum For Power Delivery Arrangements Fed From The Main Power Board? .. 57

9. Language Dispute 9: Should Applicable Charges Be Waived Under The "Power Fuse Reduction" Feature Only When Fuse Sizes Are Decreased, Not Increased? 58

10. Language Dispute 10: Should AT&T Illinois Be Limited To One (1) Audit Per Year? 60

11. Language Dispute 11: Should AT&T Illinois Be Required To Provide CLEC With Notification Of The Audit Results For All Audits, Or Only For Those Audits That Actually Impact The CLEC? 63

12. Language Dispute 12: Should AT&T Illinois Be Required To Cooperate With CLECs To Prepare A Standard Notification Form? 64

13. Language Dispute 13: Should AT&T Illinois Be Required To Adjust A CLEC's Billing If The Audit Result Indicates That Actual Usage Is Less Than The Certified Amount? 65

14. Language Dispute 14: Should The Collocator Represent And Warrant That, Under Normal Operating Conditions, It Will Not Draw More Than Its Collocator-Specified Amperage Load? 66

15. Language Dispute 15: Should Joint CLEC-Proposed Language At The End Of Paragraph 21D Be Included? 68

V. CLEC PROPOSALS TO RETAIN POWER METERING IN ANY FORM SHOULD BE REJECTED 70

A. SUPPLY-SIDE METERING WITH SHUNT BARS IS NOT A VIABLE SOLUTION 70

B. SUPPLY-SIDE METERING WITH SPLIT CORE TRANSDUCERS IS NOT A VIABLE SOLUTION 74

C. SUPPLY-SIDE METERING WITH HAND HELD METERS IS NOT A VIALBE SOLUTION 78

D. RETURN-SIDE METERING CANNOT BE FIXED BY USING AN ADJUSTMENT FACTOR 82

VI. CONCLUSION 84

STATE OF ILLINOIS
ILLINOIS COMMERCE COMMISSION

In the Matter of	)	
	)	
Proposed Revision to the Collocation Tariffs	)	**Docket No. 05-0675**
to Eliminate Charges for DC Power on a	)	
Per Kilowatt-hour Basis and to Implement	)	
Charging on a Per Amp Basis	)	

INITIAL BRIEF OF AT&T ILLINOIS

I. INTRODUCTION

In this proceeding AT&T Illinois requests that the Commission approve its proposed revisions to its collocation tariff that will change the way it charges CLECs for DC power. This proceeding is less contentious than a typical docket and the parties appear to be in agreement on several critical issues. For example, there is agreement that the return-side power metering architecture used by AT&T Illinois today does not work and has been plagued by significant leakage (i.e., failure to measure DC power) since it was first deployed in 2001. In addition, no party submitted evidence to challenge AT&T Illinois' showing that the leakage ranges between 30 and 50%, and averages 47% on a weighted average basis. Nor does anyone dispute that AT&T Illinois has lost approximately $25,000,000 in DC power charges since 1998. All parties are also in agreement that whatever system replaces return-side power metering, it must be usage-based. Finally, the parties agree that if power is charged on a "per amp" basis, AT&T Illinois' proposed rate of $9.80 per amp is appropriate because it correctly converts the existing rate of $.28 per kwh. Given these broad areas of agreement, the question for this proceeding is not "whether" return-side power metering goes away - it is "what" will replace it.

Joint CLECs[1] throw out three proposals that never gain much traction because they themselves merely offer them as "alternatives" and do not stand behind them with an affirmative recommendation. They are: 1) shunt-based supply-side metering; 2) supply-side metering using split core transducers; and 3) hand held metering. The Staff of the Illinois Commerce Commission ("Staff") does not recommend any of them. As we discuss below, these metering solutions are expensive, operationally impractical and/or technically unworkable. While the Commission may, of course, consider these alternatives, it should not devote much time to them nor should it be mislead into believing that they present viable alternatives. They do not.

The only viable solution before the Commission is the AT&T Illinois "per amp" proposal, which permits CLECs to certify their actual usage of DC power in amperes ("amps") and which obligates AT&T Illinois to bill on that basis. This proposal is usage-based and renders accurate bills because it relies upon the CLEC's self-certification of its actual usage - subject to AT&T Illinois' right verify that usage in an audit process. It is also cost effective because it relies on existing infrastructure and requires no additional investment. The "per amp" proposal is set forth in RAS-14 to the Surrebuttal Testimony of Roman Smith. AT&T Ill. Ex. 5.2. Through six rounds of testimony and two days of hearings, this case has effectively come down to the question of whether the mechanics for the "per amp" process set forth in RAS-14 are appropriate.

AT&T Illinois has gone a long way to accommodate the concerns raised by Joint CLECs about the procedures under the "per amp" proposal. Joint CLECs submitted an extensive "mark up" of AT&T Illinois' revised tariff language in which they proposed to delete AT&T Illinois language and to add new language of their own. Jt. CLEC Ex. 2.2, Attch. SET-3. In an effort to

[1] Joint CLECs include Covad Communications Company, Inc. ("Covad"), McLeodUSA Telecommunications Services, Inc. ("McLeodUSA"), Mpower Communications Corp. ("MPower"), and XO Communications Services, Inc. ("XO"). Qwest Communications Corporation ("Qwest") is not a Joint CLEC.

reach a compromise solution, AT&T Illinois responded by accepting many of the Joint CLEC changes. For example, it agreed to the Joint CLEC's proposal to establish an "Interim Amperage" amount to be billed in the period before AT&T Illinois receives the CLEC's initial self-certification (Paragraph 16A); it agreed to the "Initial Certification Report" to be submitted by the CLEC (Paragraph 16A); it extended the period for the submission of the Initial Certification Report from 30 days to 90 days (Paragraph 16A) (though this is still less than the CLEC-requested 180 day period); it agreed that Joint CLECs can submit updated certifications anytime (Paragraph 16A); it agreed that the true-up process following the submission of the Initial Self-Certification report will take place within 90 days (Paragraph 16A); it agreed to reduce the minimum amp amount from 10 to 5 (Paragraph 17)(though CLECs still do not agree); it agreed that CLECs have 30 days to contest any audit (Paragraph 21A); it agreed to provide written notice of certain audits (Paragraph 21A); it agreed to the details to be included in the audit notice (Paragraph 21A); and it agreed to a detailed dispute resolution process (Paragraph 21C and D). *See* Schedule RAS-14.

Despite these agreements, significant disputes remain on how the "per amp" process will work. There are 15 of these disputes, each of which is discussed below. Three of these disputes deserve special mention because they are of critical importance to AT&T Illinois.

First, self-certification should be based on actual measurements taken by CLECs and CLECs should take them once every six months. Joint CLECs argue they should not be "burdened" with this obligation, but this is no hardship because CLEC technicians are present at their collocation arrangements at least twice a year, so they can take these readings in the normal course of their business. In any event, it is not unreasonable to expect CLECs to assume this obligation. If AT&T Illinois billed CLECs for the number of amps fused on a power delivery

arrangement like some other ILECs in Illinois do (a so-called “fused amp” arrangement), the CLEC would have no obligation at all - but neither would it enjoy the benefit of paying only for the DC power that it actually uses. The benefits that CLECs derive under the “per amp” proposal carries with it the natural obligation to take periodic measurements of its actual usage so that AT&T Illinois can accurately bill.

Second, Joint CLECs argue that AT&T Illinois should be limited to one audit a year and should be required to adjust a CLEC’s billing downward based on the results of the audit. There is no justification for these limitations. The purpose of an audit is not merely to catch CLECs that under-report. While that is a legitimate purpose, the larger goal is to encourage CLECs to accurately report their usage without conducting an audit at all. Ideally, just the possibility of an audit will become a more valuable compliance mechanism than an actual audit. Unfortunately, the audit process loses most of its deterrent effect under the Joint CLEC proposal because after AT&T Illinois conducts its single audit, a CLEC will know that it is no longer subject to oversight and may draw excess power without fear of detection. If the audit process is to serve its essential purpose of deterrence it can not be limited in the way the Joint CLECs propose.

The other aspect of the audit issue is the Joint CLEC attempt to convert the audit process into an AT&T Illinois-provided measurement service. This should be rejected. AT&T Illinois incurs the expense of the audit to ensure that it is not providing DC power for free – not to protect CLECs from drawing too little power. CLECs can always protect themselves against using less power than they report by changing their certification - which they can do at any time. AT&T Illinois bears the expense to make sure that CLECs are not over using power; and the CLECs bear the expense to make sure they are not under-using the power they are paying for. The Joint CLEC proposal confuses these distinct roles and should be rejected.

Third, Joint CLECs object to the proposed 5 amp minimum for power delivery arrangements served from a battery distribution fuse bay ("BDFB") and 51 amp minimum for arrangements served from the main power board. As we explain below, the 5 amp minimum is justified by AT&T Illinois' cost recovery requirements and the 51 amp minimum is justified by technical limitations that require scarce ports on the main power board be used only for large power cables. Power cables fused as less than 51 amps can be more efficiently served from ports on the BDFB.

Finally, AT&T Illinois' "per amp" proposal satisfies the relevant policy objectives. It is usage-based, so it satisfies the requirements of the Commission's *Second Interim Order* in Docket 96/0468-96/0569. It produces accurate charges so that CLECs are not underbilled or overbilled for DC power. It is cost-effective because it uses the existing infrastructure therefore requires no capital investment which would otherwise have to be passed along to CLECs. It is also easy to administer and will minimize any disruption of CLEC operations because it does not require that active power feeds be broken in order to install a supply-side metering system.

For all of these reasons, AT&T Illinois' "per amp" proposal is the best replacement system for the existing return-side power metering system and should be adopted by the Commission.

II. RETURN-SIDE METERING IS AN UNDISPUTED FAILURE

A. THE ORIGINS OF RETURN-SIDE POWER METERING IN ILLINOIS

The Commission recognizes that AT&T Illinois can charge collocating CLECs for DC power consumption, but as early as 1998 held that those charges must be usage-based. *Investigation Into Forward Looking Cost Studies and Rates of Ameritech Illinois for Interconnection, Network Elements, Transport and Termination of Traffic*, Docket No. 96-

0486/96-0569, Second Interim Order dated February 17, 1998 (“*Second Interim Order*”) at 98. The Commission has never mandated the use of power metering. Rather, it directed AT&T Illinois to recalculate its DC power charges “along the lines suggested by Staff”. *Second Interim Order* at 99. The Commission provided only a short description of Staff’s position:

> Staff suggested that the power consumption charges should be based on usage and not per-circuit capacity of the equipment located in the cage. (Tr. 2111) Staff proposed that Ameritech should be directed to recalculate those charges and either provide a cost on a per-unit basis, which is measured for power consumed or reduce the charge to a square foot basis, which closely mirrors its actual charges.

While this is admittedly somewhat vague, AT&T Illinois believed that Staff was looking for some type of methodology that closely correlates the amount billed to the CLEC with CLEC’s actual consumption of collocation power. AT&T Ill. Ex. 1.0 at 10-11. Significantly, Staff did not foreclose the option of a “per square foot” methodology, or some other approach, that would “closely mirror actual charges”. Neither Staff nor any other party to Docket 96-0486/96-0569 provided direction or guidelines as to how direct current (“DC”) power measurement could be accomplished. In fact, no ILEC anywhere in the nation was measuring the amount of DC power consumed by each CLEC, so there was absolutely no precedent for AT&T Illinois to follow to implement the Commission’s Order. Id.

Because no off-the-shelf solution was available, AT&T Illinois worked with an outside engineering firm (“Marconi”, now known as “Emerson Network Power”) to develop a system to measure DC power consumed by collocated CLECs. AT&T Ill. Ex. 1.0 at 11. AT&T Illinois engineers designed a return-side metering solution that measured power on the cable that returned current from the CLEC telecommunications equipment back to the Battery Distribution Fuse Bay (“BDFB”). This was based on the AT&T Illinois engineering assumption that all current passing through CLEC equipment returned to the BDFB on the return lead. In order to

take a measurement on the return-side cable, the cable is severed and reconnected by an exposed metal plate known as a “shunt”, which is simply a calibrated conductor. AT&T Ill. Ex. 3.0 at 14. The shunt is connected by a wire to a Power Metering Unit (“PMU”). The wire transmits voltage readings to the PMU, which in turn measures the power being consumed by the equipment based on the current flowing over the return-side cable at the location of the shunt. The voltage readings are in millivolts (“mV”). An algebraic equation is used to calculate the current value (in amps) from the measured mV reading to determine how much electric current is returning to the power source. AT&T Ill. Ex. 4.0 at 8. The millivolt readings taken by the PMU can also be converted into a value in kilowatts. The PMU periodically downloads the measurements to a PMU server, which records the measurements taken by all of the PMUs located throughout a central office. AT&T Ill. Ex. 3.0 at 10. This architecture is depicted in Figure 1, below:

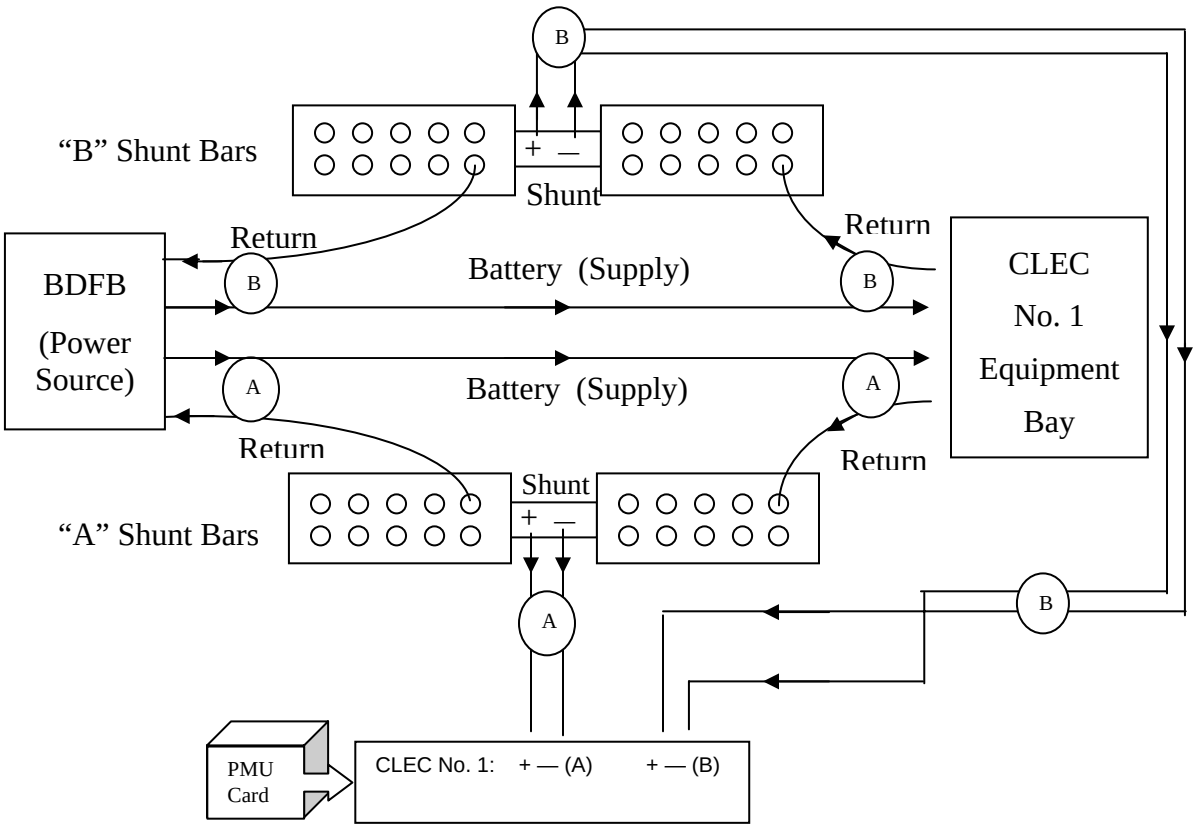

Figure 1

AT&T Illinois was required to (and did) file compliance tariffs effective April 18, 1998, but it took roughly two and a half years to design, engineer and install the DC power metering architecture. Since AT&T Illinois had no means to comply with its tariff during this period, billing to CLECs was discontinued until the power metering architecture was put in place. As a result, AT&T Illinois did not bill CLECs for collocation power for nearly two years, (AT&T Ill. Ex. 1.0 at 12), and CLECs received a substantial windfall as a result.

The existing rate structure includes four rate elements as follows:

	Recurring Charge	***Nonrecurring Charge***
Power Measurement - Per Customer Arrangement	-	*$2,911.85*
Power Measurement Billing Charge - Per Customer Arrangement	*$11.49*	-
Power Measurement Engineering Charge - Per Existing Non-Measured Arrangements Only		*$272.47*
Power Consumption - Per KWH	*$0.28*	-

The Power Measurement rate element recovers cost for purchase and installation of PMUs. The Power Measurement Engineering rate element recovers cost for installing shunts and associated wiring. The Power Measurement Billing rate element covers monthly CABS bill processing costs. AT&T Illinois proposes to delete these three charges. The Power Consumption rate element, which recovers the monthly DC power consumed by CLEC on a per kilowatt hour basis,[2] would convert to a "per amp" charge of $9.80. AT&T Ill. Ex. 2.0; AT&T Ill. Ex. 5.0 at 17-18.

B. RETURN-SIDE POWER METERING FAILS TO MEASURE 30-50% OF THE DC POWER THAT CLECS CONSUME

What AT&T Illinois initially believed would be a workable DC power metering architecture did not perform as expected. During some routine network reliability tests in the Chicago Superior central office in early 2002, AT&T Illinois engineers discovered that a

[2] The Commission reviewed and approved these rates in *Investigation into the Compliance of Illinois Bell Telephone Company with the Order in Docket 96-0486/0569 Consolidated Regarding the Filing of Tariffs and the Accompanying Cost Studies for Interconnection, Unbundled Network Elements and Local Transport and Termination and Regarding End to End Unbundling Issues*, Docket 98-0396, dated October 16, 2001 at 51-52.

significant percentage of DC power provisioned to CLEC collocation arrangements was bypassing the measuring devices (shunts) on the battery return leads and was instead flowing to the frame grounds. AT&T Ill. Ex. 1.0 at 14. (Most central office equipment is located in frames which have a ground conductor tied to the central office ground system. Grounding is necessary to prevent damage to equipment. AT&T Ill. Ex. 3.0 at 11). The electric current leaking through the frame grounds was never measured by the monitoring shunts and therefore was never recorded by the PMUs or billed to the CLECs. AT&T Illinois estimated that approximately 36% of DC power was leaking to frame grounds and was not being measured and calculated the lost revenue in all AT&T Illinois offices at $2.4 million annually. McLeodUSA Ex. 1.06 (AT&T Ill. Resp. to Joint CLEC DR 1.2) (email dated April 28, 2002).

To further validate the leakage problem, AT&T Illinois asked Telcordia Technologies, Inc. ("Telcordia") to conduct a more comprehensive test in the Superior central office and to look at the Franklin, Canal and Illinois Dearborn central offices as well. AT&T Ill. Ex. 1.0 at 15. Telcordia determined from these tests that metering on the battery return lead simply cannot provide an accurate measurement of the load current. Telecordia also concluded that "the error in the metering could be about 30% to 50% of the measured values". AT&T Ill. Ex. 3.0 at 12 and Schedule MN-6, p. 24.

Additional validation of this severe leakage was provided by Jeanne Muellner, an AT&T Illinois power engineer with extensive hands-on experience with power delivery in AT&T Illinois central offices. Ms. Muellner selected medium-to-large central offices with several CLECs, both caged and cageless. AT&T Ill. Ex. 4.0 at 11. The Franklin office, in particular, was included in her analysis because it was the subject of the Telcordia Technologies study. Ms. Muellner measured two different things.

First, she measured "frame ground currents" at the Franklin central office in order to determine whether she was observing the same condition that was detected by Telcordia Technologies. Her results confirmed that she was. To be clear, the purpose of taking a "frame ground current" reading is not to measure the extent of leakage at a particular collocation. Rather, it is to verify that leakage is taking place. The current on the frame ground is not equivalent to the leakage from any particular power delivery arrangement because that current comes from throughout the central office - from the equipment of AT&T Illinois, the collocated CLEC and other CLECs. Tr. at 413, 429, 431 (Muellner). Ms. Muellner's frameground reading (shown in Schedule JM-2 of her Direct Testimony) prove that leakage is a serious problem.

Second, in order to quantify this leakage Ms. Muellner measured the "battery current" (i.e., the current in the supply-side power cables feeding the CLEC equipment) and the return current at the shunts (i.e., the current in the return-side cable exiting the CLEC equipment). AT&T Ill. Ex. 4.0 at 7-8. The difference between these two readings is the "leakage", i.e., the difference between the amount of power provided by AT&T Illinois to a CLEC and the amount of power measured in the return cable. Ms. Muellner's readings for the twelve (12) CLEC collocation arrangements she measured are shown in Schedule JM-3 to her Direct Testimony and show that leakage ranges between 0% and 90% and averages 38%. Id. at 12.

A simple average of Ms. Muellner's readings shows leakage of 25%, but a weighted average shows leakage of 47%. QCC Ex. 9.0 (AT&T Ill. Resp. to Qwest DR 2.19). The weighted average is the more appropriate indicator of actual leakage because it accounts for the fact that some power delivery arrangements have only light usage (around 5 amps) while others are more heavily used. In Ms. Muellner's sample, some arrangements used as little as 2 amps and other used as much as 69 amps. Without a weighted average, a hypothetical power delivery

arrangement that uses just 5 amps and has no leakage will mask the impact of a hypothetical leakage of 50% at a power delivery arrangement that uses 70 amps. A simple average of these two occurrences would lead one to believe that AT&T Illinois was losing only 18.75 amps (75 amps x 25% leakage), when in fact it is losing 35 amps (70 amps x 50% leakage).

Ms. Muellner further explained that, while she did not measure leakage at all collocation arrangements in all AT&T Illinois central offices, there is no reason why the results found at the four central offices she did measure would differ at other AT&T Illinois central offices. All of the AT&T Illinois central offices utilize the same architecture for measuring CLEC power usage, i.e., the same return shunt bars and the same PMUs. Tr. at 430 (Muellner). All of this unrebutted evidence conclusively establishes that AT&T Illinois is experiencing significant financial loss and that CLECs are enjoying an undeserved windfall.

C. AT&T ILLINOIS' LOSSES ARE $25,000,000 AND GROWING

AT&T Illinois has lost roughly $25,000,000 in unbilled DC power. AT&T Ill. Ex. 5.1 at 24. There are two components to this calculation - the 36% annual loss since the system was installed in 2001 and the 100% loss in the 2 years before the system was deployed.

The annual loss of $2.4 million is based on analysis done in 2002 by Mr. Robert Lindsley, an AT&T Illinois power engineer, in connection with his determination that leakage was occurring at the Superior central office. *See* McLeodUSA Ex. 1.06 (AT&T Ill. Resp. to Joint CLEC DR 1.2) (e-mail dated April 28, 2002). Mr. Lindsley calculated the extent of the leakage at the Superior office in kilowatt hours and converted that into dollars based on the tariff rate of $.28 per kilowatt hour. He then extrapolated from that figure for the Superior office to calculate system-wide losses of $2.4 million a year. This figure is conservative because it uses a 36% leakage figure rather than Ms. Muellner's 47% figure. It also ignores the fact that AT&T

Illinois has been unable to bill due to periodic failure of PMUs that record the power usage measurements, depriving it of the kilowatt-hour data needed to bill CLECs. AT&T Ill. Ex. 4.0 at 15-16. In any event, AT&T Illinois has lost at least $2.4 million each year for the five years that power metering has been in effect (mid-2001 to mid-2006), for total losses of about $12,000.000.

This does not tell the full extent of the loss, however, because AT&T Illinois did not bill for DC power at all for a period of two years from early 1998 to mid-2000. As Mr. Parker explained, AT&T Illinois was required to file its compliance tariff in early 1998. This tariff required AT&T Illinois to bill on a per kilowatt hour basis, but AT&T Illinois had no way to do that until mid-2001. AT&T Ill. Ex. 1.0 at 12. As a result, AT&T Illinois suspended its billing for DC power provided to CLECs, resulting in roughly two years of lost DC power revenue. Mr. Smith estimated this loss at roughly $7,500,000 per year - or an additional $15,000,000.[3] AT&T Ill. Ex. 5.1 at 24. If one adjusts Mr. Smith's estimate slightly downward to $13,000,000 to account for the calculation explained in footnote 3 below, the total loss to AT&T Illinois due to its experience with power metering since 1998 has been in the neighborhood of $25,000,000. ($12,000,000 + $13,000,000). This is an exorbitant amount to lose under any circumstances, but here the loss has a double-barrel impact on AT&T Illinois because it was a funding the efforts of its competitors to take business away from AT&T Illinois.

The point of this proceeding is not to recover that loss. Rather, the point is to *stop* the loss going forward by putting an end to the power metering system and by adopting as its replacement the "per amp" proposal set forth by AT&T Illinois. Of course, the $25,000,000 loss also becomes relevant to the extent that CLECs propose that AT&T Illinois be prevented from

[3] The $7,500,000 per year loss calculation flows from the estimate that AT&T Illinois' loss between 2001-2006 was caused by a 36% leakage factor and resulted in an annual loss in those years of $2,400,000. The algebraic equation to determine the loss where AT&T Illinois collects no DC power revenue at all is: .36 x Y = $2,400,000, where Y is the amount of lost revenue in a year where no billing takes place. In this equation, Y = $6,600,000. Over two years, the loss is approximately $13,200,000.

recovering its power-related costs in the future. Joint CLEC witness Mr. Turner suggests that the CLECs are entitled to some type of credit for the $1,500,000 in non-recurring charges they paid since 2001. Jt. CLEC Ex. 2.0 at 43. Any such proposal should be decisively rejected because CLECs have reaped a windfall benefit of $25,000,000 in direct DC power subsidies that far outweigh any potential claim they may have for a credit of $1,500,000.[4]

D. OTHER OPERATIONAL PROBLEMS MAKE RETURN-SIDE POWER METERING UNWORKABLE

Leakage is not the only problem with power metering. Any power metering solution relies on PMUs, the rack-mounted panels that measure electrical power consumption over time. In 2004, there were trouble reports on 53 PMUs. Of the 215 PMUs installed in AT&T Illinois central offices as of May 2005, 24 required replacement of the CPU circuit card in 2004 due to failure. AT&T Ill. Ex. 4.0 at 15. Most of these problems resulted from defective CPU circuit cards, for which the manufacturer issued a product defect notice. In addition, 91 PMUs have gone out of service at some time since their installation. Since 2003, one PMU goes out of service about every six weeks due to a failed modem circuit card or failed CPU circuit card. The service outage lasts until the circuit card can be replaced, which typically takes approximately 2 to 3 days. Id. at 16.

Mr. Turner argues that the PMU reliability problem should have gone away in 2005 after the problem with the CPU cards was detected. Jt. CLEC Ex. 2.0 at 1081-1083. They did not. In 2005, there were 39 new PMU trouble reports and for the first two months of 2006, there were 7

[4] Even without the $25,000,000 loss CLECs would not be entitled to a refund. AT&T Illinois charge a rate that was filed with and approved by the Commission and the filed rate doctrine prohibits any refund. *Mandel Brothers, Inc. v. Chicago Terminal Co.,* 2 Ill. 2d 205 (1954); *IPTA v. Illinois Commerce Commission*, Ill. App. Ct. 5th Div., Docket 1-04-0025 (November 23, 2005). Moreover, CLECs have used the PMUs and shunts for the past 5 years and cannot claim that AT&T Illinois did not deliver what it charged for. AT&T Illinois incurred real costs to provide the power metering system to CLECs and is entitled to recover those costs.

more. AT&T Ill. Ex. 4.1 at 3. The problems with the PMUs are not going away and the prospect is that PMUs will continue to experience these unacceptably high failure rates in the future.

These periodic failures cause additional revenue loss because every time a PMU goes down, the DC power AT&T Illinois provides goes unmeasured and unbilled for the duration of the outage. AT&T Ill. 1.0 at 17. So, in addition to the leakage problem (which by itself is sufficient reason to end power metering), the PMU reliability problem provides further reason to get rid of the power metering system and to replace it with AT&T Illinois' "per amp" proposal.

E. THERE IS GENERAL CONCENSUS THAT RETURN-SIDE POWER METERING DOES NOT WORK AND MUST BE REPLACED

All parties agree that return-side power metering does not work and must be replaced. This is the central thesis of AT&T Illinois' tariff filing and is endorsed by Staff witness Stewart, who agrees that the current system of metering power with return-side shunts is not accurate and that a change needs to take place. Staff Ex. 1.0 at 279-283. Joint CLECs also agree that the current system of metering power with return-side shunts is not accurate and does not charge them for the DC power that they actually use. Jt. CLEC Ex. 2.0 at 815-828. On cross-examination, Joint CLEC witness Steven Turner acknowledged that return-side metering does not work and should not remain in place. Tr. at 237. In short, no one disputes that the existing power metering tariff must be replaced. Accordingly, this case does not involve "whether" the current system must be change; it involves the question of "what" the replacement system should be.

III. AT&T ILLINOIS' "PER AMP" TARIFF PROPOSAL IS REASONABLE AND SHOULD BE APPROVED

A. THE "PER AMP" PROPOSAL

AT&T Illlinois' revised tariff proposal is contained in paragraphs 16-21A of Schedule RAS-14 attached to the Surrebuttal Testimony of Roman Smith, AT&T Ill. Ex. 5.2. This "per amp" DC power proposal works as follows:

Power Delivery - AT&T Illinois will furnish and install power cable and the associated cable racking necessary to provision power feeds to the CLEC's collocation arrangement. The power will be provisioned over two power feeds, each capable of carrying more than the specified amperage load to the collocation arrangement. As shown by the agreed-upon language in paragraph 16 (Schedule RAS-14), there is no dispute about this aspect of the proposal.

Collocator-Specified Amperage Load - AT&T Illinois will charge a monthly recurring rate on a per amperage (or "per amp") basis. The charge will be assessed on a load amp basis, i.e., based on the number of amps that the CLEC uses - not on the fused capacity of the power lead. The CLEC will specify the amount of power it uses, in amps, (i.e., the "Collocator-Specified Amperage Load") and AT&T Illinois will bill that amount. So, for example, if a CLEC specifies 21 amps of power, it will be billed for 21 amps even though the power delivery arrangement will be fused in a way that would permit it to draw more power than that. The CLEC will perform a physical site, measured verification of its actual usage and will report this amount to AT&T Illinois twice a year. AT&T Ill. Ex. 5.2, Sch. RAS-14.

In addition, the CLEC can submit a revised statement of its actual usage at any time, and should certainly do so if its actual draw increases or decreases due to the addition or deletion of equipment (or the activation or deactivation of *existing* equipment). In fact, if the CLEC increases or decreases its total actual drain by more than ten (10) amperes between self-

certifications, it is required under the revised tariff to submit a revised Collocator-Specified Amperage Load and AT&T Illinois will use that updated certification for billing. Amperage can be ordered in 1 amp increments, provided that the minimums are met. The tariff prevents CLECs from drawing - under normal operating conditions - more than 50% of the combined total capacity of both the power leads provided by AT&T Illinois.

In order to ensure cost recovery for CLEC power delivery arrangements connected to AT&T's power plant which are unused or seriously under-utilized, AT&T Illinois proposes a 5 amp minimum for power delivery arrangements served from a Battery Distribution Fuse Bay ("BDFB"). This minimum is intended to assist AT&T Illinois in recovering the costs for the DC power infrastructure that are only recovered in the recurring monthly power charge. Without a 5 amp minimum, AT&T Illinois would be incurring costs to provide the CLEC with the capability to draw DC power without recovering those costs. AT&T Ill. Ex. 3.2 at 12; Tr. at 330 (Nevels).

For power delivery arrangements served directly from the main power board of the wire center, there is a 51 amp minimum. This minimum is designed to make sure that the scarce ports on the main power board are used efficiently for large power delivery arrangements and are not wasted on small arrangements that are better served from a BDFB. As Mr. Nevels testified, CLEC power delivery arrangements with less than a 51 amp load are not currently provisioned from the main power board and were rarely, if at all, provisioned in the past. Tr. at 374-375. As we explain below, any power delivery arrangement on the main power board that does not draw at least 51 amps can be switched to a BDFB for a nominal charge.

The Audit Process - Since this is an honor system, AT&T Illinois proposes an audit provision that will permit it to make sure that the CLEC has accurately reported its actual load amps. Joint CLECs proposed an audit provision and recommended that there should be

provisions in the tariff to penalize CLECs for any under-reporting of DC power usage, Jt. CLEC Ex. 2.0 at 1361-1365, so no one disagrees with the concept of an audit. And AT&T Illinois' audit proposal is very forgiving. If an audit shows that the actual usage is between 1% and 9% greater than the Collocator-Specified Amperage Load, the discrepancy is treated as *de minimus* and there are no consequences for the CLEC. Discrepancies that are 10%-19% more than the specified amount (and at least 5 amps) are remedied by retroactive billing of the proper amount and adjustment of the bill going forward. If the discrepancy at any single power delivery arrangement is 20% or greater than the certified amount (and at least 5 amps), AT&T Illinois retroactively bills the proper amount and adjusts the bill going forward, and the CLEC pays the costs that AT&T Illinois incurs, on a time and material basis, to conduct the audit and to correct the billing at that location. This is not exactly a "penalty" as that term is used by Mr. Turner; it is more of a cost-recovery mechanism. As an alternative, AT&T Illinois could charge the CLEC twice the billed amount for the past 6 months at any location where the discrepancy is 20% or greater than the certified amount. AT&T Ill. Ex. 5.1 at 10. This approach may be easier for all parties to administer and would minimize potential disputes.

In any event, in order to ensure that the CLEC always has an incentive to accurately report its usage, there is no limit on the number of audits that AT&T Illinois could perform each year.

Rate Conversion - The tariff changes the recurring rate element for "power consumption per kwh" to a "per amp" rate element of $9.80 per amp per month. The existing Commission-approved per kwh rate is readily converted to a per amp rate utilizing a formula that is already inherent in the calculation of the approved kwh rate. Mr. Vangel used this formula, and the

approved TELRIC-based collocation power costs from Docket No. 98-0396, to calculate per amp costs. AT&T Ill. Ex. 2.0 at 6.

To the extent that a CLEC has accurately ordered power commensurate with the power requirements of its collocated equipment, the cost effect of the rate conversion will be negligible. Id. The "per amp" proposal does nothing to alter the level of the approved per kwh cost; it merely converts an existing approved cost (per kwh) to a different unit of measure (per amp). There is no increased AT&T Illinois cost being attributed to CLECs' power usage with this simple conversion proposal. Therefore, setting aside the effect of leakage, the conversion proposal will result in a neutral net effect, from a cost perspective, to both the CLECs and AT&T Illinois. Id. at 7.

In fact, given the way Mr. Smith calculated the revised "per amp" rate, the DC power rate paid by CLECs actually will go down. Mr. Smith took the "per amp" costs from Mr. Vangel and applied a shared and common cost factor to arrive at a rate of $9.80. Mr. Smith used the most recent shared and common cost factor approved by the Commission, i.e., the factor of **[BEGIN CONFIDENTIAL]** ********** ********** ********** ********** **[END CONFIDENTIAL]**

No party disputes that AT&T Illinois correctly performed the conversion from the existing per kwh rate to a per amp rate. Staff witness Mark Hanson says that AT&T Illinois' conversion is mathematically correct. Staff Ex. 1.0 at 59-60. Joint CLECs agree that AT&T Illinois accurately calculated the per amp rate of $9.80 by converting from the existing $0.28 per

kwh rate. Jt. CLEC Ex. 2.0 at 49-56. Thus, there is no issue in this case concerning the $9.80 per amp rate.[5]

Elimination of Other "Power Metering" Rates - Additional CLEC savings will result from AT&T Illinois' proposal to eliminate existing rate elements attributable to power metering. These are the $2,911.85 non-recurring Power Measurement charge that recovers the cost to purchase and install PMUs; the $272.47 non-recurring Power Measurement Engineering charge that recovers the cost to install shunts and associated wiring; and the $11.49 recurring Power Measurement Billing charge (per customer arrangement) that recovers the cost of monthly CABs bill processing. AT&T Ill. Ex. 1.0 at 13.

Power Fuse Reduction - AT&T Illinois' "Power Fuse Reduction" proposal allows a CLEC to reduce the fuse size where it has ordered more power than it currently needs. AT&T Ill. Ex. 5.0 at 9, 15. The benefit to CLECs is that it provides a way for them to more easily come into compliance with Part 785.55(a)(1), if necessary. AT&T Illinois also benefits if CLECs use smaller fuses, thus reducing the potential maximum load on the power plant and reducing the likelihood that a power augmentation will be needed. It is for these reasons that the proposal to waive cost recovery is limited to fuse *reductions* -- these benefits do not exist when a CLEC requests to *increase* the fuse size.

The only cost to the CLEC to take advantage of this feature is the service charge that it normally pays when it submits any type of collocation application. The non-recurring rate of $300.50 applies for physical caged collocation arrangements.[6] The non-recurring rate of $115.26

[5] Similarly, all parties agree that no cost study is needed to support the "per amp" proposal. AT&T Ill. Ex. 2.0 at 3-4; Jt. CLEC Ex. 2.0 at 95-101; Staff Ex. 2.2 at 2-3.

[6] ILL. C.C. No. 20; Part 23, Section 4; Section D-Prices (Order Charge-Per Connect Order-NRC).

applies for virtual and cageless collocation.[7] AT&T Illinois will have to do a good deal of work to perform a "Power Fuse Reduction", such as tagging power cables, restenciling power cables, updating records and vendor engineering, but for the time being it is willing to perform those functions for CLECs at no charge. In this way, AT&T Illinois hopes to make it as attractive as possible for CLECs to *reduce* their power arrangements, where appropriate.

No Physical Changes are Required to Implement the Tariff Changes - The beauty of AT&T Illinois' proposal is that it works with the existing physical infrastructure for DC power. AT&T Illinois' proposal can therefore be put into effect quickly, without requiring a CLEC to make a single change to its collocation arrangement. There is also no need to install any new equipment, thus avoiding the need to recover these costs from the CLECs. Indeed, some of the alternatives proposed by the CLECs could require investment as high as $15,000,000 and would require DC power charges to be increased by that amount. AT&T Ill. Ex. 2.1 at 7-8. Given the very real prospect of significantly higher DC power charges under some of the alternative proposals, the fact that the AT&T Illinois "per amp" proposal requires no new investment makes it the preferred solution from a cost perspective.

Moreover, under the AT&T Illinois proposal, there is no equipment to install such as supply-side shunts or split core transducers that could disrupt CLEC operations. Joint CLEC witness Turner explained how changing fuses "creates a risk of service problems". Jt. CLEC Ex. 2.0 at 62. The same risk of service problems is created by breaking the supply-side power cables to install a shunt bar. AT&T Ill. Ex. 5.0 at 10. AT&T Illinois' proposal carries none of that risk.

[7] ILL. C.C. No. 20; Part 23, Section 4; Section B-Prices (Service Order Charge). These order charges were established in Docket No. 98-0396.

B. THE "PER AMP" PROPOSAL SATISFIES THE RELEVANT POLICY OBJECTIVES

There are several important objectives the Commission should keep in mind as it considers the replacement for power metering. AT&T Illinois' "per amp" proposal meets them all.

First, any system should produce accurate charges so that CLECs are not underbilled or overbilled for DC power. Underbilling would be a critical failing because if AT&T Illinois does not recover the costs it incurs to provide power to CLECs it will not be able to maintain a safe, efficient and reliable source of power for those CLECs. Underbilling would also create a direct subsidy from AT&T Illinois to CLECs, requiring it to financially support the operations of its competitors. For the same reasons, overbilling is equally unacceptable.

AT&T Illinois' proposal produces accurate charges. Unlike the current return-side power metering system, the per amp proposal using CLEC self-certification will permit AT&T Illinois to accurately bill CLECs for the power they actually use. Admittedly, the billing will not accurately track every amp the CLEC uses. This is essentially a "trust me" system, so a CLEC could conceivably draw more power than the amount it certifies to AT&T Illinois. Even if AT&T Illinois detects such a discrepancy in an audit, discrepancies less than 10% (and less than 5 amps) are essentially ignored, so AT&T Illinois may not be able to bill for every amp of power that it provides. AT&T Illinois, however, is willing to live with this degree of inaccuracy if the other provisions of the proposal are adopted, including its proposals for the self-certification and the audit processes.

Second, there should be a close correlation between the DC power that a CLEC needs to meet its collocation power requirements and the power charges that the CLEC incurs, i.e., the system should be usage-based. That is not to say that it must track usage precisely; any such

system - even if it were technically feasible - would be too expensive. But different CLECs have different power requirements, and the billing method should accommodate these variations so that a CLEC that only needs a small amount of power is charged a commensurately lesser amount than a CLEC that needs a lot of power. AT&T Illinois' "per amp" proposal achieves this objective.

While there is some debate around the 5 amp minimum issue, there is no question that AT&T Illinois' proposal only bills CLECs for the DC power that they actually consume. CLECs can specify their usage in 1 amp increments and can change their specification at any time. While CLECs are bound by the tariff to draw no more than the specified amount, AT&T Illinois agreed during the hearing that this restriction only applies during "normal operating conditions". This means that if a low-voltage situation occurs (causing the CLEC to draw more amps), or if the CLEC equipment temporarily draws an increased amount of power during a "start up" phase,[8] the CLEC would not violate the tariff by using slightly more than the specified amount for a very short duration. Mr. Turner agrees that billing based upon the CLEC-specified amount (what he calls "load amps") is usage-based. Jt. CLEC Ex. 2.1 at 4. Likewise, Staff testified that billing on this basis is usage-based. Tr. at 615 (Stewart).

Third, the Commission should consider whether the system it approves is cost-effective. Because the principle of cost-causation requires the CLECs to bear the cost of any such system, the Commission should carefully consider whether such costs yield any significant benefit or whether, as AT&T Illinois has demonstrated, existing infrastructure can do the job with no extra costs. There is, of course, a trade off between accuracy, on the one hand and cost, on the other. The question is whether the marginal increase in accuracy is worth the great expense needed to

[8] Qwest has never adequately explained what a "start up" is and why it believes it would cause a power surge, and AT&T Illinois does not believe this is a problem. Nonetheless, it is willing to insert the words "under normal operating conditions" to alleviate the concerns expressed by Qwest.

achieve it. Putting aside for the moment the safety concerns that rule out any supply-side metering proposal from the outset, the supply-side metering would cost approximately $15,000,000 -- four times greater than the cost to implement return-side power metering. AT&T Ill. Ex. 2.1 at 7-8. AT&T Illinois' "per amp" proposal, on the other hand, will require no capital investment and is extremely cost-effective. It can be implemented using just the existing power infrastructure, without the need to recover any additional costs from the CLECs.

Fourth, the Commission should consider whether the system it approves is relatively easy to administer. For example, if a measurement system can only be administered with a host of ancillary equipment, which itself is prone to outages (causing further inaccuracies in measurement/recording/billing), then the Commission must consider whether the burden is really worth the benefits it is trying to achieve. That is not a problem under the "per amp" proposal. Unlike the existing return-side power metering system that relies upon PMUs, which are prone to failure (and when they do fail, data is lost and power goes unbilled), under the "per amp" proposal AT&T Illinois would bill the amount of amps specified by the CLEC. CLECs would take on the administrative obligation of making the periodic self-certifications, and AT&T Illinois would take on the obligation of conducting periodic audits to ensure the accuracy of the CLECs self-certification. These administrative obligations are manageable in light of the fact that CLECs will be present at their collocation arrangements roughly two times a year in any event. Tr. at 253 (Turner).

Fifth, the Commission should consider whether any changes to the physical plant are required and whether such changes could be implemented without causing undue disruption to CLEC operations. Here again, AT&T Illinois has shown that its proposal can be implemented without requiring any interference with CLEC operations. Unlike a supply-side shunt system,

the "per amp" proposal requires no breaking of the power cables that would cut off power to the CLEC equipment. And, unlike the split core transducer proposal, which would prevent the supply power cables from being "sewn" together as required by AT&T Illinois technical standards and would create further congestion in the overhead cable racking, AT&T Illinois' proposal requires no physical change to the network.

For all of these reasons, AT&T Illinois' "per amp" proposal is the best replacement for the current return-side power metering system.

C. THE "PER AMP" PROPOSAL IS CONSISTENT WITH THE WAY POWER IS BILLED IN OTHER STATES.

AT&T Illinois' "per amp" proposal is in line with the collocation power billing methods in place or approved by other state commissions.

In many states, collocation power is still billed on a fused amps basis, i.e., the number of amps that a CLEC is capable of drawing over the power arrangement. This is the way collocation power is billed in most AT&T ILEC states. AT&T Ill. Ex. 5.1 at 10. Typically, the ILEC bills for the fused amps on only one of the two power leads, on the theory that the second power lead is for redundancy only. For example, in Indiana and Ohio, AT&T bills a CLEC for the number of amps ordered on one of the two power feeds and warrants that it will not draw more than 50% of the available power. *In the Matter of Joint Application by SBC Communications Inc., Illinois Bell Telephone Company, Indiana Bell Telephone Company Incorporated, the Ohio Bell Telephone Company, Wisconsin Bell, Inc., and Southwestern Bell Communications Services, Inc. for Authorization To Provide In-Region, InterLATA Services in Illinois, Indiana, Ohio, and Wisconsin,* Memorandum Opinion and Order, WC Docket No. 03-167, (October 15, 2003) at 25, 29-30 and n. 109 ("*Midwest 271 Order*"). The CLEC orders the

fusing capacity that it requires for its collocation arrangement and AT&T provisions the power at 125% of the requested amperage on both an A feed and a B feed. So, if a CLEC believes that it needs to have 40 amps of power available to it at a collocation arrangement, it will order 40 amps of power and AT&T will provision 50 amps of power (40 x 125%) on each of the two power feeds. The CLEC pays for 40 amps regardless of how much power it actually uses. As the FCC found in the *Midwest 271 Order*, this method for billing CLECs for collocation power complies with the requirement in § 251(c)(2) to provide interconnection on rates, terms and conditions that are just, reasonable and non-discriminatory. *Id.*

AT&T California bills the same way as AT&T Indiana and AT&T Ohio. *See Public Utilities Commission of the State of California*, Application 05-05-027, Final Arbitrator's Report (April 19, 2006) at 157-164. This method of "fused amp" billing has been recently endorsed in California by the Final Arbitrator's Report. The Final Arbitrator's Report also recommends rejection of MCI's request that AT&T California be required to meter power. *Id.* at 163-64.

BellSouth bills on a "fused amp" basis in North Carolina. This approach was approved by the North Carolina Utilities Commission in *Provision of Collocation Space*, Docket No. P-100, Sub. 133, North Carolina Utilities Commission (September 3, 2002) (2002 WL 31103699 N.C.U.C. at 54). It is also the approach taken by Bell South in South Carolina, where CLECs are billed for the fused amps provided, reduced by approximately 1/3 to take into account the fact that a CLEC would not normally use the full fused amp capacity. *South Carolina Public Service Commission*, Docket No. 2001-209-C, Order No. 2002-77 (February 14, 2002) at 23. AT&T Illinois' "per amp" proposal is more usage-based than the billing systems used in all of these states.

Many Illinois ILECs other than AT&T Illinois charge for DC power on a fused amp basis. Citizens Communications Company and Gallatin River both have approved interconnection agreements that permit them to charge the CLEC for all of the amps fused on the power delivery arrangement. AT&T Ill. Ex. 1.0 at 23. Some Verizon interconnection agreements also appear to assess DC power charges on a "fused amp" basis. Id. at 24.

Several states have moved away from the fused amp approach to a more usage-based system in which the CLEC is billed for the number of amps that it actually uses. Michigan, Missouri, Tennessee, Florida and Kansas all fall into this category. In Michigan, the Commission found that AT&T Michigan could only charge the CLEC for the DC power that it uses, not for the redundancy that is required for back-up power (i.e., the "B" lead). The Commission noted that AT&T Michigan had reached agreement with a CLEC conforming to this principle and must have found that this resolution was sufficient because it went on to hold that metering should not be required because every proposed method had "significant problems associated with it". *Michigan Public Service Commission*, Case No. U-13531, Opinion and Order (December 21, 2004) at 20.

The Missouri Commission addressed this issue in the context of an arbitration proceeding. The Commission considered MCI's request for power metering but did not accept it. Instead, it ordered that power charges be usage-based. The entire ruling is as follows:

> The Arbitrator concludes that charges should be based on the power actually consumed by the CLECs. A negotiated solution would likely have resulted in a better result than any of those proposed by the parties. In the absence of such a result, charges should be based on the rated power draw of the equipment actually installed in the collocation space.

Missouri Public Service Commission, Case No. TO-2005-0336, *Southwestern Bell Telephone, L.P. d/b/a SBC Missouri's Petition for Compulsory Arbitration of Unresolved Issues for a*

Successor Interconnection Agreement to the Missouri 271 Agreement ("M2A"), Final Arbitrator's Report at Sec. Collocation at 11 (Order issued July 11, 2005).[9]

Likewise, in the decision cited by Joint CLECs in the Direct Testimony of Mr. Turner, the Tennessee Regulatory Authority found in an arbitration proceeding that the per amp rate for DC power should apply to "amperes used and not to fused capacity". *In Re: Petition of MCIMetro Access Transmission Services, LLC and Brooks Fiber Communications of Tennessee, Inc. for Arbitration of Certain Terms and Conditions of Proposed Agreement with BellSouth Telecommunications, Inc. Concerning Interconnection and Resale Under the Telecommunications Act of 1996,* Before the Tennessee Regulatory Authority, Interim Order of Arbitration Award, Docket No. 00-00309, Order at 43 (April 3, 2002). Again, there is no requirement for power metering -- just a requirement to charge for amps actually used.

Florida also requires DC power charges "based on amps used, not fused". Florida specifically declined to require power metering. *BellSouth Telecommunications Inc*., Docket No.981834-TP; Docket No. 990321-TP; PSC-03-1358-FOF-TP, Florida Public Service Commission (November 26, 2003) at 22-23. In Kansas, the most recent word from the Corporation Commission is that AT&T Kansas should charge CLECs based on the "total DC power consumption in terms of ampere draw of all equipment collocated by the CLEC, based on information obtained through the CLEC's collocation application forms". *In the Matter of the Complaint of South Central Wireless, Inc. d/b/a SC Telcom Against Southwestern Bell*

[9] MCI's interconnection agreement with AT&T Missouri thus provides that "[c]harges for power will be assessed per ampere per month, based upon the actual amperes used." (Physical Collocation Appendix, Section 3.1). No power metering arrangement exists for any Missouri CLEC. Other CLECs have agreed to, and the Missouri Public Service Commission has approved, an interconnection agreement amendment in which the CLEC warrants that it will not draw more than 50% of the combined total capacity of the DC power leads provided by AT&T Missouri, and AT&T Missouri will bill the CLEC 50% of the charge applicable to such total provided capacity. See. e.g., *Collocation Power Amendment to the Interconnection Agreement Under Sections 251 and 252 of the Telecommunications Act of 1996 Between Southwestern Bell Telephone, L.P. d/b/a SBC Missouri and XO Missouri, Inc*. File No. VT-2005-0023 (September 20, 2004).

Telephone, L.P. d/b/a SBC Kansas for Overcharges Related to Power Use for Collocation, Order Denying SC Telcom's Petition for Reconsideration of Relief Granted and Directing Parties on a Method for Determining the Amount of a Refund Owed to SC Telcom, Docket No. 04-SWBT-544-COM, (November 21, 2005) at 4.

AT&T Illinois' "per amp" proposal is consistent with the usage-based charges required in these states. It is also consistent with the usage-based requirement of the Illinois Commission's own pronouncement on this issue in the *Second Interim Order* at 98. There, Staff suggested that AT&T Illinois charge for DC power "based on usage":

> Staff suggested that the power consumption charges should be *based on usage* and not per-circuit capacity of the equipment located in the cage. (Tr. 2111) Staff proposed that Ameritech should be directed to recalculate those charges and either provide a cost on a per-unit basis, which is measured for power consumed or reduce the charge to a square foot basis, which closely mirrors its actual charges. (emphasis added)

The Commission ordered AT&T Illinois to charge for DC power "along the lines suggested by Staff". *Id.* at 99. There is no metering requirement here; in fact, the Commission did not direct AT&T Illinois to implement any particular usage-based methodology. To the contrary, it simply directed the Company to generally charge for power "along the lines" suggested by Staff. The "along the lines" language in particular gives AT&T Illinois substantial leeway in implementing a usage-based system in compliance with the *Second Interim Order*.

Against this back drop of cases that authorize fused-based and usage-based charging methodologies, two states have gone somewhat further to specifically endorse the concept of metering. In Georgia, the Commission adopted a usage-based system, with metering as an option:

> The most sensible solution is to order usage-based pricing, while recognizing the costs that BellSouth may incur to install and read meters.

> The Commission adopts the Staff recommendation to require BellSouth to offer CLECs the option of being billed for power on a load amp basis.

Georgia Public Service Commission, Docket No. 14631-U, *Review of Cost Studies, Methodologies, Pricing Policies, and Cost Based Rates for Interconnection and Unbundling of BellSouth Telecommunications, Inc.'s Services,* Order at 41 (March 18, 2003). Under this language, BellSouth's DC power charges *must* be usage-based. It is less clear that metering is *required*. The Georgia Commission states that one way to achieve usage-based charges is through metering, with CLECs bearing the cost of the metering system, but this does not rule out other usage-based solutions. Apparently, the parties to the Georgia proceeding agree because the decision was rendered in March, 2003 and after more than three years, BellSouth has not implemented any metering system. AT&T Ill. Ex. 5.1 at 20. It is clear, therefore, that BellSouth and CLECs have found a more efficient, cost effective way to implement a usage-based system in Georgia.

The Texas situation is similar to Georgia. The Texas Commission mistakenly believed that power metering was a viable way to implement usage-based charging and directed the parties to work together to establish a metering arrangement. Texas Public Utility Commission, Docket No. 28821, Arbitration Award-Track I Issues (February 23, 2005), Collocation Matrix at 2. Fourteen months have passed and no power metering arrangement has been implemented. While it is too soon to say how this will turn out, AT&T Texas and the CLECs continue to negotiate toward a mutually-agreed arrangement for DC power charges.

Published decisions show that Verizon has implemented a usage-based system that charges CLECs on a load amp basis according to the number of amps specified by the CLEC. Pennsylvania charges on a load amp basis, i.e., CLECs are charged for the number of amps they "order", not the number of amps fused on the power cables. *See In the Matter of Application of*

Verizon Pennsylvania Inc., Verizon Long Distance, Verizon Enterprise Solutions, Verizon Global Networks Inc., and Verizon Select Services Inc. for Authorization To Provide In-Region, InterLATA Services in Pennsylvania, Memorandum Opinion and Order, CC Docket No. 01-138 (September 19, 2001) at 107. The same is true for New York, where the NYPSC approved a settlement between Verizon, WorldCom, Time Warner and Covad[10] that created a system whereby the CLECs "order" (i.e., specify) their actual usage. The NYPSC Order describing this arrangement does not provide details covering the mechanics of CLEC certification or ILEC audits. *In Re Verizon New York, Inc.,* Order Adopting The Terms of a Joint Proposal, Case 03-C-0980 (April 14, 2004).

Thus, the majority of states follow an approach similar to AT&T Illinois' "per amp" proposal, i.e., 1) they charge on a per amp basis; and 2) they do not rely on "metering". In several of these states, the ILEC's billing is based on some sort of CLEC certification of its actual usage. AT&T Illinois' proposal is in line with the reported outcomes in other states, thus providing another reason why it should be approved by the Commission.

D. AT&T ILLINOIS' PER AMP PROPOSAL DOES NOT ALTER A COLLOCATOR'S POWER COST.

Because the rates for power supplied to collocation arrangements are comprised of both AC power and DC power components, in order to develop its original kilowatt per hour rate that was approved by the Commission in AT&T Illinois' TELRIC Compliance proceeding in Docket 98-0396, AT&T Illinois had to use a factor to convert the AC kilowatt per hour power increments to DC per amp power increments. AT&T Ill. Ex. 2.0 at 5. In this proceeding, AT&T Illinois is using that same conversion factor to convert the kilowatt per hour rate into a per amp

[10] Covad is an active participant in the Illinois proceeding.

rate. AT&T Ill. Ex. 2.0 at 5-6.[11] Joint CLEC witness Steven Turner does not dispute that AT&T Illinois' conversion factor is accurate. Jt. CLEC Ex. 2.1 at 3. Similarly, Staff witness Mark Hanson believes that "the conversion of the existing per kwh charge to a monthly per amp charge is mathematically correct." Staff Ex. 2.0 at 3. Mr. Hanson also confirmed that AT&T Illinois used the appropriate shared and common factor in its conversion of these costs to the proposed per amp rate. Id.

Because no party has challenged whether AT&T Illinois' proposal properly converts the approved kilowatt per hour cost to a per amp cost, it is axiomatic that AT&T Illinois' proposal will result in a "net neutral effect" for AT&T Illinois and collocators, at least from a *cost* perspective. AT&T Illinois' proposal merely uses a mathematical formula to convert a cost in one form of measurement to a different, but equally proportional, form of measurement. Because the formula is a simple mathematical conversion, there can be no increased cost attributed to a collocator's power usage. AT&T Ill. Ex. 2.0 at 7. Therefore, under AT&T Illinois' per amp proposal, to the extent that a collocator has ordered power accurately commensurate with the power requirements of its collocated equipment, the cost effect of the rate conversion will be negligible. *See* AT&T Ill. Ex. 2.0 at 7; AT&T Ill. Ex. 2.1 at 6.

Nevertheless, several parties claim that AT&T Illinois' proposal would lead to huge increases in the amounts that they would be billed for DC Power. Qwest witness Ms. Hunnicutt-Bishara testified that Qwest's bills would be 2700% to 8900% higher. *See* QCC Ex. 1.0 at 6. McLeodUSA's witness Ms. Spocogee made similar claims, alleging that McLeodUSA would see

[11] This conversion factor can be seen in the Proprietary Attachment 1 to AT&T Ill. Ex. 2.0 (Attachment 1, page 575, line 8). Currently, the conversion factor is applied to DC Power plant to convert the amps into kilowatt hours (because the charges to the CLEC are on a per kilowatt hour basis). In AT&T Illinois' proposal in this case, the conversion factor would be applied to convert kilowatt hours into amps. As explained elsewhere in this brief, AT&T Illinois is using an updated, and lower, shared and common cost markup factor, which effectively reduces the DC Power rate that will be applied.

exorbitantly large increases in the amounts it would be charged under AT&T Illinois' proposal. *See* McLeodUSA Ex. 1.0 at 3. These assertions are baseless. First, in response to questions from the Administrative Law Judge, AT&T Illinois witnesses explained that the only factor likely to generate any increase in billed amounts is the five-amp minimum ordering requirement. Second, AT&T Illinois has shown that both Qwest and McLeodUSA substantially exaggerated their claims, which are, in any event, based on fundamentally flawed facts and analysis.

1. The Five-Amp Minimum Charge Explains Any Billing Differential

The record shows that any variation in expense that collocators may see under the per amp methodology (as compared to the current methodology) would come as a result of the unique circumstances of each individual collocator, particularly with regard to the application of the minimum ordering requirements found in AT&T Illinois' proposal.[12] This matter was made clear during the Administrative Law Judge's question of AT&T Illinois witness Mr. Parker:

> Q. […] Which is another way of saying is the 5 amp minimum the sole explanation for the discrepancy between AT&T's calculation and the CLEC's calculation?
>
> If you don't know, that's certainly fair to say.
>
> A. I don't know of any other variable other than the 5 amp minimum that might cause that.

Tr. 487. **[BEGIN CONFIDENTIAL]** **********

****

****

[12] Variations could also be attributable to the elimination of leakage that has artificially and erroneously suppressed billings to collocators and other problems AT&T Illinois has experienced in billing under its current billing methodology.

Q. ********** ********** **********

A. ********** ********** ********** ********** **********

Q. **********

A. **********

********** ********** **********

****

********** **[END CONFIDENTIAL]**

While the parties have presented differing views as to what the ultimate impact might be, there is agreement that the source of most, if not all, of the billing differential that would occur where the five-amp minimum ordering requirement is applied to power arrangements that currently draw less than 5 amps.[13] In AT&T Illinois' view, the number of active (i.e., non-dormant) power arrangements that will draw less than 5 amps should be very small, and, therefore, this issue should not be of any great concern. AT&T witness Nevels testified that if CLECs apply sound central office engineering practices with regard to the placement of their equipment in collocation sites by using common power arrangement facilities to supply power to multiple pieces of equipment, "[t]his practice would maximize the usage of CLEC's investment in the power cabling and would cause the CLEC to use more than 5 amps of power." AT&T Ill. Ex. 3.2 at 10-11. Thus, where CLECs employ sound power engineering principles, they will avoid the application of minimum ordering requirements and the potential for billing increases.

[13] Ms. Hunnicutt-Bishara asserts that various factors may produce fluctuations in power draw that would make it impossible for CLECs to accurately measure their current usage for certification purposes. *See, e.g*, QCC Ex. 1.0 at 11 ("there can be a significant difference among the recommended amperage, maximum power requirements for the equipment, and the actual power consumed during normal operations"). Her view is not shared by the other CLEC witnesses. Mr. Turner testified that "Telecommunications equipment used in collocation arrangements does not have significant variations in power usage." Joint CLEC Ex. 2.1 at 29. Staff agrees that telecommunications equipment draws power at a "relatively constant" rate. Staff Ex. 2.2 at 1. AT&T Illinois concurs. AT&T Ill. Ex. 3.1 at 27-28.

Nevertheless, to illustrate the effect of the five-amp minimum and to assist the Administrative Law Judge's analysis, AT&T Illinois prepared (and attaches to this brief as Confidential Exhibit A) a modified version of AT&T Illinois Ex. 5.1 – Sch. RAS-9, which was the exhibit prepared by Mr. Smith (based upon Ms. Hunnicutt-Bishara's Schedule VHB-1) that analyzed Qwest's billing under AT&T Illinois' "per amp" proposal. In this illustrative exhibit, AT&T Illinois has eliminated the effect of the five amp minimum ordering charge by adding a column (which is the highlighted column on the right-most portion of the exhibit), which assumes the following:

(a) At collocation sites where more than five amps have been recorded being used, AT&T Illinois assumes that the CLEC will certify that level of amperage use and will be billed accordingly (at the $9.80 per amp rate that is not in dispute).

(b) At collocation sites where less than five amps (but more than zero amps) have been recorded being used, AT&T Illinois has rounded up the amperage recorded to the nearest whole amp and charged for that amount for the entire site. For example, if the site is shown to have four power arrangements but has drawn only 2.7 amps, AT&T Illinois has rounded up the amperage to 3 amps and assumed that three of the four power arrangements will draw 1 amp apiece and the remaining power arrangement will draw 0 amps.

(c) At collocation sites where no usage has been recorded, AT&T Illinois assumes that the site is dormant and will be decommissioned or terminated. Thus, no power charges will arise from this collocation site unless the CLEC elects to maintain the dormant site.

This analysis demonstrates that the five-amp minimum ordering requirement is the source of any increased billing to a CLEC such as Qwest. The differential shown between "status quo" billing and billing under the per amp proposal (without the effect of the five-amp minimum) is **[BEGIN CONFIDENTIAL]** ********** **[END CONFIDENTIAL]**. This difference is just a rounding error and can be explained by the fact that this analysis rounds up to the next full amp, so that if the CLEC is using six-tenths of an amp, the analysis bills it out as 1 full amp.

The point of this analysis is not to suggest that a 0 amp minimum is appropriate. To the contrary, AT&T Illinois explains in Section IV (Language Dispute 7) why a 5 amp minimum is critical to its proposal. The point of this analysis is to demonstrate that the CLEC allegations of increased DC power billing are fully attributable to the 5 amp minimum and not to any other component of the "per amp" proposal.

2. Claims Of Exorbitant Increases Are Erroneous.

Qwest's and McLeodUSA's exaggerated claims of thousands of percent increases over current billing levels are easily shown to be specious. Qwest claims an increase in a range between 2700% and 8900% – a spread of 6200 percentage points – which itself suggests that Qwest has abandoned any attempt at quantifying the alleged problem with any precision.[14] AT&T Illinois witness Smith showed in his testimony that Qwest's assertions result from an apples-to-oranges comparison and are grossly misleading. Ms. Hunnicutt-Bishara assumed in her computations that AT&T Illinois would charge Qwest for each fused amp present at a CLEC collocation arrangement – which was never AT&T Illinois' proposal. See AT&T Ill. Ex. 5.1 at 25-26; see also QCC Confidential Cross Exhibit 1. When Mr. Smith recomputed Qwest's potential charges under the assumption that Qwest would only be billed for amperage that Qwest certified it would actually be using in each of its collocation arrangements (assuming a 5 amp

[14] Qwest's witness explains in a footnote to a schedule in her testimony that the disparate range results from her assumption that it would make no changes to the power it orders from AT&T Illinois as compared to assuming that Qwest would reduce the power it orders under AT&T Illinois' Fuse Reduction offer. *See* QCC Ex. 1.0, Schedule VHB-1 (comparing column E to column F). That Qwest would ignore the opportunity to reduce the power costs it pays under the per amp proposal is highly unlikely. Ms. Hunnicutt-Bishara could provide no further explanation. During cross examination, she admitted that she knew nothing about Qwest's current or future plans regarding the management of its collocation power arrangements in the future. Tr. at 515 (Hunnicutt-Bishara).

minimum), the percentage increase was dramatically less than what Qwest had computed. See AT&T Ill. Ex. 5.1 at 28-29; AT&T Ill. Ex. 5.1 – Sch. RAS-9.[15]

Moreover, even the smaller percentages identified by Mr. Smith undoubtedly overstate any potential impact of AT&T Illinois' "per amp" proposal on Qwest future billings. Ms. Hunnicutt-Bishara admitted that she did not account for the leakage amounts that Qwest has not been billed for under AT&T Illinois' metered power system in her analysis.[16] Nor did Qwest offset from its computations the fact the PMU units that AT&T Illinois has employed have not consistently measured all the power Qwest has used. Ms. Muellner and Mr. Smith presented testimony that AT&T Illinois has had persistent troubles with the PMU units used to measure power drawn by collocators and that such problems would lead to further understatement of the amounts billed to collocators. *See* AT&T Ill. Ex. 5.1 at 28; AT&T Ill. Ex. 4.0 at 15-16.

Finally, Qwest arbitrarily assumed that all of its collocation arrangements would remain active despite the fact that **[BEGIN CONFIDENTIAL] ******************************
****
****
****
****
****
****
********************************* [END CONFIDENTIAL]** Unfortunately, Qwest has

15 And even if Mr. Smith's calculations are adjusted to take into account individual power arrangements, that percentage would still be only about **[BEGIN CONFIDENTIAL]******[END CONFIDENTIAL]** of the low end of Ms. Hunnicutt-Bishara's inflated range.

16 S*ee* Tr. at 544 ("[t]his column does not take into consideration any difference to compensate for the leakage.").

provided the Commission no answer. By including these sites in its calculations, however, Qwest exaggerates the impact of AT&T Illinois' per amp proposal.

AT&T Illinois witness Smith's analysis reflects the likelihood that Qwest would probably decommission or terminate unused collocation sites and the associated power arrangements. **[BEGIN CONFIDENTIAL]** ********** ********** [17] ********** ********** ********** ********** ********** ********** **[END CONFIDENTIAL]**

McLeodUSA's claims are also easily shown to be completely unreliable. McLeodUSA witness Spocogee calculates what she believes to be the additional DC power costs that McLeodUSA would incur under the AT&T Illinois proposal. **[BEGIN CONFIDENTIAL]** ********** ********** **[END CONFIDENTIAL]** McLeodUSA Ex. 1.0 at 3. Mr. Smith reviewed Ms. Spocogee's calculations and showed that she committed two fundamental errors which invalidate her entire analysis.

Using information obtained from McLeodUSA in discovery,[18] Mr. Smith determined that Ms. Spocogee used an invalid amount for the "Estimated Load Amps" that underpin her entire analysis. The amounts used by her were not the *actual* load amps that AT&T Illinois would charge and thus bear no relation to McLeodUSA's actual usage. *See* AT&T Ill. Ex. At 31. **[BEGIN CONFIDENTIAL]** **********

[17] *See* QCC Ex. 1.0, Schedule VHB-1 (Column D). If no amperage is reported for the status quo then no power is being drawn to any of the power arrangements associated with the collocation arrangement.

[18] These discovery responses were admitted into the record as AT&T Ill. Ex. 5.1, Sch. RAS-10 and Sch. RAS-11.

****

****

****

****

****

****

****

****

****

********** **[END CONFIDENTIAL]** A similar disparity exists for every central office for which McLeodUSA provides an actual field measurement reading. From this Mr. Smith concluded that the "Estimated Load Amps" used by Ms. Spocogee to calculate the alleged increase in McLeodUSA power billings did not reflect the actual load amps that would be charged by AT&T Illinois under its proposal. As is the case with Qwest's claims, the fundamental assumption McLeodUSA relied upon for its claims of massively increased charges is completely wrong.

Using data produced by McLeodUSA in discovery, Mr. Smith recomputed McLeodUSA's potential increase. His starting point were the data provided by McLeodUSA (admitted as AT&T Ill. Ex. 5.1, Sch. RAS-10) of a current average monthly power charge of **[BEGIN CONFIDENTIAL]** **********

****

****

****

****

********** **[END CONFIDENTIAL]** McLeodUSA presented no rebuttal to this recalculation.

That some collocators may actually see a *reduction* in DC Power charges is consistent with AT&T Illinois' proposal in this case. AT&T Illinois is using an updated shared and common cost factor, which is lower than the shared and common cost factor used to calculate the existing per kilowatt hour rate of $.28. In any event, as demonstrated above, Qwest's and McLeodUSA's excessive claims regarding potential increases in their respective DC power charges are untrue. Even if accepted at face value (which they should not be), they pale in comparison to the amounts underbilled or never billed by AT&T Illinois due to the limitations and problems associated with the current supply side metering method. Mr. Smith estimated AT&T Illinois' past losses at approximately $25,000,000. *See* AT&T Ill. Ex. 5.1 at 24. This windfall to CLECs goes unmentioned by Qwest and McLeodUSA in their analyses. Instead, they attempt to create the impression that AT&T Illinois' proposal is a stratagem to raise CLEC costs for DC Power. Their arguments are both untrue and unfair, particularly where AT&T Illinois has "purposefully not included in this proceeding a claim for its lost DC power, believing that the best approach was to look at this issue with fresh eyes and to start with a clean slate." AT&T Ill. Ex. 5.1 at 24.

IV. THE DISPUTED LANGUAGE IN SCHEDULE RAS-14 SHOULD BE RESOLVED IN FAVOR OF AT&T ILLINOIS

AT&T Illinois' "per amp" proposal is not a one-sided proposition. To the contrary, it was designed to accommodate the interest of all parties -- CLECs, Staff and AT&T Illinois --

and to meet the objective criteria by which the Commission would likely judge it. The inherent reasonableness of the "per amp" proposal is demonstrated by Staff's support for this approach throughout the proceeding. Staff Ex. 1.0 at 17,19; Staff Ex. 2.1P at 4-5; Staff Ex. 2.2 at 2. It is also demonstrated by the gradual narrowing of issues between AT&T Illinois and the CLECs as this proceeding progressed. While AT&T Illinois understands that the "per amp" approach is not the first choice of the Joint CLECs, they agree that it is a reasonable approach (Jt. CLEC Ex. 2.1 at 31) and they generally agree that the areas of dispute are shown by the language differences in Schedule RAS-14. Tr. at 259-265 (Turner).

Indeed, the track record of return-side power metering is too abysmal, the costs of supply-side metering are too great, and the network safety issues are too daunting to require any form of power metering. This is especially so when usage-based DC power bills can be accurately rendered based on a system of CLEC self-certifications and ILEC auditing, as AT&T Illinois proposes in this case.

Accordingly, the Joint CLECs themselves devote much of their testimony to discussing the mechanics of how the self-certifications will be done and how the audit process should work. *See*, e.g., Jt. CLEC Ex. 2.0 at 55-74; Jt. CLEC Ex. 2.2 at 3-26 and Attch. SET-3. While Joint CLECs make clear that they only present these arguments in the alternative, the inescapable conclusion is that Joint CLECs understand that AT&T Illinois' "per amp" proposal is a reasonable approach and that their real dispute is with how it should be implemented, not whether it should be implemented at all. As a practical matter, therefore, this case is really about resolving the disputes that CLECs have raised with AT&T Illinois' proposed tariff language. Schedule RAS-14 originated with the proposed tariff language AT&T Illinois filed on September 15, 2005 to revise Ill. C.C. No. 20, Part 23, Section 4, by adding paragraphs 16-20 and by

deleting certain rates associated with return-side power metering. In response to testimony from Joint CLEC witness Mr. Turner, AT&T Illinois revised this language to add provisions for self-certification and auditing. *See* AT&T Ill. Ex. 5.1, Schedule RAS-4. Mr. Turner then made specific revisions to this language to show the language that Joint CLECs would accept. Jt. CLEC Ex. 2.2, Attch. SET-3. Mr. Smith responded in Schedule RAS-14 by accepting much of the Joint CLEC proposal language (shown in normal text). Where he could not accept Joint CLEC language, he included it as bold, underlined text (to indicate language proposed by Joint CLECs and opposed by AT&T Illinois). Where Joint CLECs could not accept AT&T Illinois language, he included it as bold, italicized text (to indicate language proposed by AT&T Illinois and opposed by Joint CLECs).

The 15 remaining language disputes are reflected in the revised tariff language set forth by AT&T Illinois in Schedule RAS-14 and by Joint CLECs in Attachment SET-3. To facilitate the Commission's analysis, AT&T Illinois has assigned an issue statement and an issue number to each of these disputes. The issues are discussed below in the order that they arise in the tariff.

1. Language Dispute 1: Should The Initial Self-Certification For *Existing* Arrangements Be Completed Within 180 Days Or 90 Days?

Section Reference: Paragraph 16A, First and Second Paragraphs

A CLEC self-certification is a document in which a CLEC informs AT&T Illinois of the amount of amps it is using on a power delivery arrangement so that AT&T Illinois can bill the CLEC for that amount of DC power. In order to implement the "per amp" process, CLECs will need to tell AT&T Illinois how much power they are using on each power delivery arrangement and will need to perform actual, on-site measurements to ascertain these values. AT&T Ill. Ex.

5.2 at 8. Joint CLECs do not dispute that an actual physical measurement is prudent to make sure that AT&T Illinois' charges are accurate at the beginning of the "per amp" process. Tr. at 249, 296 (Turner). Staff agrees. Tr. at 619-620 (Stewart).

AT&T Illinois initially proposed that CLECs complete these initial measurements within 30 days of the tariff effective date, but extended this period to 90 days in response to concerns raised by CLECs. AT&T Ill. Ex. 5.2 at 7-8. Given that it takes between 5 minutes (Tr. at 250 (Turner)) and 30 minutes (AT&T Ill. Ex. 5.2 at 8) for a CLEC to take an actual measurement at a power delivery arrangement, 90 days is a reasonable period for CLECs to complete this task. Mr. Turner points out that some Joint CLECs have collocation arrangements in over 100 AT&T Illinois central offices. Jt. CLEC Ex. 2.2 at 15. Even if a CLEC has collocation arrangements in 120 offices, 90 days will give it sufficient time to make a visit to each of its collocation arrangements to take the reading. Granted, there will be travel time between central offices, but a 90 day period provides roughly 64 working days -- meaning that a CLEC with collocation arrangements in as many as 120 offices would only have to average about two (2) offices each business day. While some offices may be far away, most of the offices where CLECs have established collocation arrangements are in the Chicago Metropolitan area. **[BEGIN CONFIDENTIAL]** ********** ********** ********** ********** **[END CONFIDENTIAL]**

The Joint CLEC request for 180 days is too long. 180 Calendar days is about 125 business days and would give a CLEC with 120 collocation arrangements more than 1 business

day per office to perform the 5 to 30 minute measurements. A CLEC with only 25 collocation arrangements would have more than a week to take each measurements in each office. Given the need to implement a new system, that much time is excessive. While it is true that Joint CLECs recognize the need for the initial certification amount to "true up" back to the tariff effective date, (Jt. CLEC Ex. 2.2, Attch. SET-3), that does not justify a six month implementation period. AT&T Illinois has agreed to the Joint CLEC proposal to bill an "interim" amount that is based on the existing metering system, but the interim amount reflects leakage of 30-50%. Thus, during the implementation period AT&T Illinois will continue to under-recover by 30-50% and will never recoup the time value of money attributable to that leakage. Nor will it recover anything at all if a CLEC files for bankruptcy during the 180 day implementation period. Ninety days is a reasonable period and should be adopted by the Commission.

2. Language Dispute 2: Should The Initial Self-Certification For *New* Arrangements Be Completed Within 90 Days Or 30 Days?

Section Reference: Paragraph 16A, First Paragraph

This issue involves the question of when CLECs should provide the initial self-certification to AT&T Illinois for *new* collocation arrangements. The Joint CLECs say that they should have 90 days from the date the collocation space is turned over to them, or 30 days from the date they turn up equipment in the collocation space, whichever is shorter. Jt. CLEC Ex. 2.2, Attch. SET-3. AT&T Illinois says that a CLEC should make the initial self-certification within 30 days of the date that the collocation arrangement is turned over to it. AT&T Ill. Ex. 5.2 at 9. AT&T Illinois' position should be adopted for two reasons.

First, this is not a situation where a CLEC must take physical measurements at 100 locations. To the contrary, a CLEC will only have to take a single reading, so 30 days is plenty

of time to take the measurement. It does not take 90 days (or even 30 days) to take a physical measurement at a single location.

Second, the Joint CLECs' proposal permits them to avoid any power charges for as long as 90 days. This is unreasonable. AT&T Illinois is required to provision DC power to the collocation arrangement at turn over. See, e.g., Ill. C. C. Tariff No. 20, Part 23, Section 4, first revised page 31.2, paragraph 1.C.14.a). This means that the DC power infrastructure (i.e., the main power board, rectifiers, generators, back-up batteries, etc.) has been connected to the CLEC's collocation and stands ready to serve the CLEC. These costs are recovered exclusively in the monthly recurring charges, and if CLECs are not paying for power, AT&T Illinois is not recovering the costs it is incurring for making the power available. AT&T Ill. Ex. 3.2 at 12. AT&T Illinois should begin recovering these costs immediately, and CLECs should provide the initial self-certification within 30 days from the date it turns over the collocation space to the CLECs. If CLECs choose not to activate their equipment for 90 days, then AT&T Illinois should nonetheless be paid for its provision of DC power to the CLEC's collocation arrangement.

AT&T Illinois understands that the Joint CLEC proposal permits AT&T Illinois to "true-up" the certified amount back to the turnover date of the collocation arrangement. For the same reasons discussed in Language Dispute 1, however, AT&T Illinois should not have to wait 90 days before it can begin billing CLEC for the DC power it provides. Namely, AT&T Illinois should not have to lose the time value of money attributable to the delayed power charges and should not run the risk of complete non-payment if the CLEC files for bankruptcy.

If CLECs believe that the "true-up" does *not* apply to new collocation arrangements, then there is an additional disputed issue between the parties. In that event, AT&T Illinois proposes

adding the following language to paragraph 16A to make it abundantly clear that the "true-up" applies to new collocation arrangements:

> Upon submission of the Initial Certification Report for new power delivery arrangements, AT&T Illinois may retroactively bill the Initial Certification reported amperage from the date the affected collocation arrangement was turned over to Collocator. These retroactively billed amounts will be backbilled to Collocator within ninety (90) days from the date the Initial Certification is submitted to AT&T Illinois.

This language should be inserted just to avoid potential ambiguity and potential disputes in the future.

AT&T Illinois' position that payment for DC power should begin at turn-over has been adopted by both the Florida Public Service Commission and the North Carolina Utilities Commission. In Florida, CLECs argued that the billing of collocation power should not begin immediately upon space acceptance. The Commission disagreed. According to the Commission, the billing of power is recurring charge and should be billed upon space acceptance:

> Upon space acceptance, the CLEC controls how quickly equipment is installed and available for customer use. To begin billing upon space acceptance also provides CLECs the motivation to move in and "ramp up" as quickly as possible in order to enjoy the economic benefits of providing service to their customers. We are somewhat concerned that if billing for power does not [sic] begin at actual usage, then if there was a delay, intentional or otherwise, in the CLEC physically occupying the space reserved, the ILECs would stand to lose the return on the investments associated with space preparation and power construction.

BellSouth Telecommunications Inc., Docket No.981834-TP; Docket No. 990321-TP; PSC-03-1358-FOF-TP, Florida Public Service Commission (November 26, 2003) at 25.

Similarly, the Commission in North Carolina found that because it is the CLEC, not the ILEC, that decides when to install the equipment, the ILEC should not be prejudiced by the CLEC's failure to install the equipment. The Commission adopted the ILEC language requiring

payment for power upon space acceptance. *Provision of Collocation Space*, Docket No. P-100, Sub. 133, North Carolina Utilities Commission (September 3, 2002) (2002 WL 31103699 N.C.U.C.) at 54. This Commission should do likewise.

3. Language Dispute 3: Should The CLEC Self-Certification Be Based On A Physical Site, Measured Verification?

Section Reference: Paragraph 16A, First and Second Paragraphs

4. Language Dispute 4: Should CLECs Be Required To Self-Certify Once A Year Or Twice A Year?

Section Reference: Paragraph 16A, Second Paragraph

These two issues are closely related and AT&T Illinois will address them together.

In Issue 3, AT&T Illinois proposes that all self-certifications be based on actual measurements performed by the CLEC. This will enhance the accuracy of the CLEC self-certification. Indeed, without an actual measurement, the self-certification is nothing more than a guess or a good faith estimate. The best way for the CLEC to make sure that the self-certification that it is providing to AT&T Illinois is, in fact, accurate is to take an actual measurement. In the absence of a physical site, measured verification, the CLEC would be left to making a clerical-type certification based on a review of its records to determine whether any equipment had been added or deleted, or whether existing equipment had been activated or deactivated, in the intervening period. AT&T Ill. Ex. 5.2 at 10-11. These records may be faulty or may not be maintained in a way that CLEC personnel in a remote location can retrieve them. In addition, CLEC personnel changes may make it more difficult for CLECs to track equipment changes. Id. Some CLECs may not have adequate records for this purpose at all. That appears to be the case with Covad, since it responded to Staff's data request for information about

collocation equipment changes in the past 12 months and 24 months by saying that "At this time, Covad is not aware of any records that it maintains that tracks equipment churn or would enable Covad to make this calculation." *See*, AT&T Ill. Ex 7.0 (Covad Resp. to Staff DR KS-2.01). For all these reasons, a CLEC's judgment about how its power usage has changed over time is only a guess. The only way for all parties to be sure that the CLEC's certification matches up with what the CLEC is actually using is to base it on a physical site, measured verification. This will produce a result that is more truly "usage-based" than any result that could be achieved by means of a usage estimate.

Mr. Turner admitted on cross-examination that it would be "prudent" for a CLEC under a self-reporting system to at least do a physical measurement at the initiation of the program. Tr. at 249 (Turner). Mr. Turner also admitted on recross-examination that a physical site measurement is more accurate than an engineering estimate. Tr. at 296-297 (Turner). He further testified that a CLEC technician would be able to perform an actual reading in approximately 5 minutes (Tr. at 250 (Turner)) and that, under normal operating conditions, it is reasonable to expect that a CLEC would have its technician on site at a collocation arrangement at least once every six months. Tr. at 252-253 (Turner). Accordingly, CLECs would be able to make the required physical readings in the normal course of business at least twice a year, as AT&T Illinois proposes.

Actual measurements, taken twice a year by the CLEC, would not place a hardship on the CLEC because it will have its technicians on-site at its collocation arrangements several times a year and should be able to take the required semi-annual readings in the normal course of its business. AT&T Ill. Ex. 5.2 at 11. The CLEC could also direct one of its vendors to take the readings on its behalf or could hire a third party for that purpose.

Staff agrees that at least the initial certification should be based on an actual measurement. Tr. at 619-620 (Stewart). Staff also believes that CLECs should be required to take additional actual measurements any time there are equipment changes in a collocation arrangement. Id. CLECs argue that they should be required to do an actual measurement for the initial certification, but thereafter an actual measurement is required only when they add or move equipment. Jt. CLEC Ex. 2.2 at 332-335, 364-375. This is improper because requiring an actual measurement only when the CLECs "adds or moves equipment" does not capture all of the modifications that would change the CLEC's current draw of DC power. A CLEC could have equipment already installed but not activated. The activation of that equipment would not be an "addition" of equipment, but would undoubtedly change the amount of DC power used by the CLEC. AT&T Ill. Ex. 3.2 at 27-28. That type of change would never be picked up by the Joint CLEC proposal. It would be picked up in no more than 6 months under the AT&T Illinois approach.[19]

The Joint CLEC proposal also would give them the sole responsibility for deciding what type of equipment change triggers the requirement to perform an actual measurement and may permit CLECs to go several years without taking an actual measurement. While AT&T Illinois certainly expects that all CLECs would honestly conduct these revised measurements when required, the obligation may be subject to interpretation and may therefore become fertile ground for future disputes.

In short, the idea of requiring future measurements only when some “change” takes place is an open-ended approach which increases the opportunity for under-reporting and general

[19] If the Commission adopts the Joint CLEC approach (and it should not), then at the very least it must ensure that a re-certification based on a physical site, measured verification take place whenever the CLEC: 1) activates or de-activates any equipment bay(s) in an existing collocation arrangement; 2) activates or de-activates any equipment shelf in an existing, activated equipment bay; or 3) activates or de-activates any card in an existing, activated equipment shelf.

inaccuracy. AT&T Illinois is willing to live with an honor system, but that system should be designed with safeguards that maximize the likelihood that CLEC self-certifications will be accurately updated to reflect actual usage. For all these reasons, the Commission should adopt AT&T Illinois' proposed language requiring CLECs to base their self-certifications on actual measurements and to make such self-certifications every six months.

5. Language Dispute 5: Should AT&T Illinois Be Required To Offer A Service To CLECs In Which It Measures Usage At Power Delivery Arrangements?

Section Reference: None

Joint CLECs make a related argument that is not reflected in the language of SET-3 or RAS-14, but which should be addressed here. They suggest that AT&T Illinois be required to offer a service where it performs a measurement of the CLEC power delivery arrangement at a rate established by the Commission. Jt. CLEC Ex. 2.2 at 419-449. This proposal should be rejected for several reasons. First, a service in which an AT&T Illinois technician takes power measurements on behalf of a CLEC is not a telecommunications service subject to the Commission's jurisdiction because it does not involve the "transmittal of information" as required by the definition of "telecommunications service" found at 220 ILCS 5/13-203. Nor is it an "access" or "interconnection" arrangement under that definition because it is not necessary for the physical connection of the CLEC and the ILEC network. Under the Commission's rules "interconnection" is defined as "the point in a network where one telecommunications carrier or end user interfaces with the ILEC's network or the network provided by another telecommunications carrier under the provisions of this part". 83 Ill. Admin. Code Section 790.100. The measurement of power at a CLEC collocation arrangement is not

"interconnection" because it has nothing to do with the physical linking of the two networks and does not affect the CLEC's provision of a telecommunication service. Rather, it is a pure network management engineering service that could be performed by the CLEC itself or by a third party vendor.

The proposal is also contrary to the very principle behind collocation, i.e., that the CLEC is making use of the ILECs central office space to operate its own network. In a physical collocation arrangement, the ILEC does not operate, manage or control the CLEC network. To the contrary, the CLEC maintains the control and management of its own network. The service Mr. Turner suggests is a network management function that should remain in the hands of the CLEC.

The Joint CLEC proposal is also based on a false premise, i.e., that "AT&T Illinois has onsite personnel in virtually all of the central offices" in question. Jt. CLEC Ex. 2.2 at 429-431. AT&T Illinois has many unmanned central offices and it would be just as much work for AT&T Illinois as it would be for CLECs to travel to these locations to perform the requested measurements. AT&T Ill. Ex. 5.2 at 12-13.

Finally, the proposal begs the question of how a rate for this function would be established. Rates of this nature are typically based on a time and material basis at the prevailing labor rate of the AT&T Illinois technician that would perform the function. *See*, e.g., Docket 02-0864 (June 9, 2004) at 133-221 (establishing loop non-recurring provisioning and installation charges). The establishment of such a rate would require a long, contentious and costly proceeding. The resources of the Commission and the parties are better used elsewhere. Moreover, because AT&T Illinois provides its technicians with a competitive package of wages and benefits through a union labor contract, Docket 02-0864 at 221, such a proceeding is

unlikely to produce a rate that is less than what CLECs could obtain from third party vendor. The Commission should reject the invitation to go down this contentious and unpromising road.

6. Language Dispute 6: Should The First Paragraph Of Paragraph 16A State That The Certification Will Contain A Statement Signed By A Responsible Officer Of The Collocator?

Section Reference: Paragraph 16A, First Paragraph

AT&T Illinois proposes to insert the following sentence at the end of the first paragraph in 16A:

> This Certification will also contain a statement signed by a responsible officer of the Collocator, which attests that Collocator is not exceeding the total load of power as reported on the Certification.

The purpose of this language is to make clear that the initial certification submitted for *new* collocation arrangements should be the same as the certification required for *existing* collocation arrangements, i.e., signed by a responsible officer attesting that the collocator is not exceeding the certified amount of power. Mr. Turner proposed this language in the second paragraph of 16A, where it applies to the "initial certification report".

> The Initial Certification Report will also contain a statement signed by a responsible officer of the company, which attests that Collocator is not exceeding the total load of power as reported on the Certification.

Jt. CLEC Ex. 2.2, Attch. SET-3. AT&T Illinois proposes to repeat this language in the first paragraph of 16A to make it abundantly clear that the same certification requirement applies to new and existing power delivery arrangements. Since this is only a matter of clarification, AT&T Illinois anticipates that Joint CLECs will not object to this language.

7. Language Dispute 7: Should There Be A 5 Amp Minimum For Power Delivery Arrangements Served From The BDFB?

Section Reference: Paragraph 17

AT&T Illinois proposes that there be a 5 amp minimum for power delivery arrangements served from the BDFB, i.e., that it be permitted to bill at least 5 amps per month per power delivery arrangement. CLECs and Staff object to *any* minimum. These objections should be overruled.

The 5 amp minimum is essential because AT&T Illinois does not recover its costs for providing DC power when CLECs do not actually draw power. AT&T Ill. Ex. 5.0 at 8; AT&T Ill. Ex. 3.2 at 11-12. Simply put, AT&T Illinois recovers its investment in the DC power plant (e.g., the main power board, the rectifier, the generators, the back-up batteries, etc.) from the recurring rate element of $9.80 per amp. Id. and Tr. at 330 (Nevels). If a CLEC is not drawing any power, AT&T Illinois is under-recovering its costs for the power infrastructure it has deployed to provide power to that CLEC. This is unacceptable both from a cost-recovery standpoint and from a public policy standpoint because AT&T Illinois must be able to recover the costs it incurs to provision power to CLECs. The DC power infrastructure is too vital to the operation of the entire public switched telephone network ("PSTN") to allow such costs to go un-reuncovered. It is literally the life blood of the PSTN and is a key area where AT&T Illinois should not be shortchanged on full cost recovery.

CLECs argue that AT&T Illinois recovers its provisioning costs in the non-recurring charges for power delivery, Jt. CLEC Ex. 2.3 at 109-164, but this is wrong. The non-recurring Power Delivery charge of $1,802.03 in the tariff (Ill. C.C. No. 20, Part 23, Section 4, Sheets 33 and 43) only recovers the cost for constructing the power cable to the CLEC's collocation space. AT&T Ill. Ex. 1.0 at 13. It does not recover the costs of the DC power infrastructure. Similarly,

the non-recurring Power Measurement charge of $2,911.85 and the Power Measurement Engineering charge of $272.47 only recover the costs of the PMUs, shunts and wiring associated with return-side metering. AT&T Ill. Ex. 1.0 at 13. These NRCs do nothing to recover the costs of the DC power infrastructure.

Is the 5 amp minimum sufficient to ensure cost-recovery? Not necessarily. AT&T Illinois originally proposed a 10 amp minimum, but cut this figure in half in an attempt to present a compromise solution. AT&T Ill. Ex. 3.1 at 24-25. That attempt failed, but the 5 amp minimum is still acceptable to AT&T Illinois as a compromise solution. It is also objectively reasonable because no actively-used power delivery arrangement should have a draw of less than 5 amps to begin with. AT&T Ill. Ex. 3.1 at 25; AT&T Ill. Ex. 3.2 at 9-11. Mr. Nevels testified that a CLEC collocation with the minimum equipment necessary for the purpose of accessing UNEs or interconnection would have multiplexing equipment, alarm panels and associated equipment that would draw at least 10 amps of power. AT&T Ill. Ex. 3.1 at 25. Joint CLECs argued that some "smaller DSL applications" can draw less than 10 amps of power, but this example does not involve less than the 5 amp minimum proposed by AT&T Illinois and is therefore irrelevant. AT&T Ill. Ex. 3.2 at 10. Joint CLECs also argued that some "cross-connected equipment" can operate in a fully-functioning manner at less than 5 amps, but did not specify a manufacturer, model number or equipment configuration, so this assertion was vague, at best. Mr. Nevels responded that if a CLEC put the alarm panel and the cross-connect equipment on the same power delivery arrangement, it should be drawing more than 5 amps of power. Id. In other words, if power arrangements are used efficiently, they will not draw less than 5 amps. It is inconsistent with sound engineering practice for a CLEC to establish more than one power delivery arrangement when each arrangement will be drawing less than that. Id.

This appears to be the practice that Joint CLECs are defending, but it is indefensible from an engineering standpoint because **[BEGIN CONFIDENTIAL]** ********** ********** ********** **[END CONFIDENTIAL]** Rather, the entire 10 amps can be (and from an engineering efficiency perspective, should be) placed on the same power delivery arrangement to maximize the usage of CLEC's investment in the power cabling. Using prudent engineering practices, the CLEC would certainly use more than 5 amps of power on a power delivery arrangement. The Commission should not justify the CLECs' questionable engineering practice by adopting the CLEC position.

Staff questions whether a 5 amp minimum can be consistent with "usage-based" power charges. Staff Ex. 2.2 at 32. Joint CLECs make the same point when they allege that a 5 amp minimum would produce a "windfall" to AT&T Illinois. Jt. CLEC Ex. 2.0 at 114-137. These concerns are mis-placed. First, for the cost-recovery reasons discussed above, there is no "windfall" to AT&T Illinois; it is merely recovering its fixed cost investment in the DC power plant infrastructure. Second, any alleged overpayment by a CLEC due to the 5 amp minimum is avoidable. The record establishes that there are only two reasons a CLEC would draw less than 5 amps of power on a power delivery arrangement. One, the collocation is inactive and is not drawing any power at all. This situation is not likely to be a long-term issue because CLECs will not maintain collocation arrangements that they do not use. Two, a CLEC may have over-provisioned power i.e., ordered four power delivery arrangements to a collocation space (with as much as 170 fused amps capacity) when it only needs to draw 10 or 15 amps in total. In this situation, the CLEC can decommission some (but not all) of its power capacity. In either case, it

is unfair to prevent AT&T Illinois from recovering the fixed cost of the DC power plant infrastructure merely because CLECs have made questionable deployment decisions.

Furthermore, the "per amp" proposal must be viewed in its entirety. Even assuming that an active CLEC arrangement was drawing less than 5 amps, a 5 amp minimum would not cause the proposal to be anything other than usage-based because there are several built-in cost savings elsewhere in the proposal. First, the shared and common cost factor used to develop the $9.80 per amp rate is 6% less than the shared and common cost factor currently in the existing rate. AT&T Ill. Ex. 5.0 at 17. Thus, CLECs get an immediate 6% savings under the AT&T Illinois proposal. Second, the proposal eliminates the monthly power measurement billing charge of $11.49 per customer arrangement (AT&T Ill. Ex. 3.0 at 13), providing additional cost savings. Third, the audit provisions are designed with a great deal of flexibility under which some CLECs will get more power than they pay for. For example, if an audit shows that a CLEC is drawing more power than it certified, but the discrepancy is less than 10%, AT&T Illinois will not adjust the CLEC's bill. AT&T Ill. Ex. 3.2 at 14. Similarly, if an audit shows that a CLEC is drawing 25% more power than it certified, but the differential is less than 5 amps, AT&T Illinois will not adjust that CLEC's bill either. Of course, these audit provisions are not designed to *guarantee* that every CLEC will get more power than it pays for. But neither does the 5 amp minimum *guarantee* that every CLEC will pay for more power than it actually uses. Most CLECs will use more than 5 amps, and for them the minimum is not an issue. The point is that the provisions, on the whole and on the average, create a "per amp" proposal that is usage-based.

Finally, the Commission should note that Verizon's Illinois tariff establishes a 10 amp minimum. *See* AT&T Ill. Ex. 3.0, Sch. LGP-3 at 2. That tariff provision has been in effect since

June, 2003 and has not been challenged by Illinois CLECs. If a 10 amp minimum is acceptable for Verizon, a 5 amp minimum should be appropriate for AT&T Illinois.

In sum, the 5 amp minimum is a vital component of the AT&T Illinois "per amp" proposal and should be adopted by the Commission.

8. Language Dispute 8: Should There Be A 51 Amp Minimum For Power Delivery Arrangements Fed From The Main Power Board?

Section Reference: Paragraphs 17 and 19

AT&T Illinois' tariff establishes a 51 amp minimum for power delivery arrangements fed from the main power board. AT&T Ill. Ex. 5.0 at 8; AT&T Ill. Ex. 3.1 at 24-25. The purpose of this provision is purely an engineering one; power delivery arrangements that require less than 51 amps are most efficiently served from ports on the Battery Distribution Fused-Bays because those ports are more common and less expensive to provide. A BDFB is a secondary distribution point and handles the smaller power cables. AT&T Ill. Ex. 4.0, Sch. JM-1 at 16. By comparison, the main power board is the first level of DC power distribution and ports at this location are far more scarce, so they are more efficiently used to feed power arrangements that require a large amount of power, or to feed BDFBs (which will in turn feed smaller power delivery arrangements). Id. at 13-15; AT&T Ill. Ex. 3.1 at 21-22.

AT&T Illinois' proposal here works hand in glove with its "Power Fuse Reduction" feature which permits CLECs to relocate their power delivery cables from the main power board to a BDFB at a nominal charge.[20] CLECs can use this feature to re-home power delivery cables to the BDFB, where appropriate, thereby avoiding any minimum charge at the main power

[20] See discussion in Language Dispute 9. AT&T Illinois will assess just the standard service order charge for this function. A single service order charge will apply for all related orders that are placed at the same time. For physical collocation arrangements, the service order charge is $300.50. For virtual collocation arrangements, the service order charge is $115.26. AT&T Ill. Ex. 5.0 at 15.

board. Mr. Nevels also explained that AT&T Illinois will work cooperatively with CLECs to make sure that they are not billed the 51 amp minimum while a power delivery arrangement is in the process of being migrated to a BDFB. Tr. at 353-354 (Nevels).

The Commission should not get the impression that power delivery arrangements of less than 50 amps are commonly served from the main power board. They are not. Any such occurrence would be "very rare" and is not occurring at all on a going forward basis. Tr. at 374, 375 (Nevels). In fact, CLECs did not introduce any evidence to establish that they have any arrangements like this, so there is no basis to conclude that this is an issue at all in Illinois.

9. Language Dispute 9: Should Applicable Charges Be Waived Under The "Power Fuse Reduction" Feature Only When Fuse Sizes Are Decreased, Not Increased?

Section Reference: Paragraphs 18 and 19

AT&T Illinois' tariff proposal includes a "Power Fuse Reduction" feature that permits CLECs to reduce the fused capacity of power to their collocation arrangements at a vastly reduced cost. Any costs incurred by AT&T Illinois for vendor engineering, rearranging fuses at the BDFB or Power Board, restenciling power plants, re-tagging cables, updating power records, and, if necessary, removing and provisioning power cables, would not be billed to the CLEC. AT&T Ill. Ex. 1.0 at 18. If AT&T Illinois charged for this work activity, it would come at a significant cost to CLECs. These costs are waived for qualifying reductions and AT&T Illinois would instead assess only its currently tariffed service order charge.

The main reason why AT&T Illinois offered the Power Ruse Reduction feature in the first place was to permit CLECs to inexpensively reduce (not increase) the fuse sizes on their power delivery arrangements in order to bring them into compliance with Rule 785.55(a)(1), if necessary. That rule establishes that:

> All direct current (DC) power supply service feeds shall be fused at a level not to exceed the rated capacity of the smallest conductor used in the feed, or 200% of the maximal operational consumption of the feed, whichever is smaller.

83 Ill. Admin. Code Section 785.55(a)(1). The parties have a joint stipulation concerning fusing requirements and AT&T Illinois does not intend to address the merits of Rule 785.55(a)(1) in this Brief. Parties Jt. Ex. 1. It is critical to understand, however, that the main reason AT&T Illinois made the Power Fuse Reduction proposal in the first place was to address potential compliance issues under Rule 785.55(a). See, e.g., McLeodUSA Ex. 1.04 (AT&T Ill. Resp. to McLeod USA DR 2.2) (AT&T Illinois presentation to Staff dated Oct. 10, 2002 at 6). Clearly, these compliance issues are addressed only when fuse sizes are reduced - not when they are increased.

While CLECs do not discuss this issue in their testimony, changes made by Mr. Turner to the tariff language in Attachment SET-3 indicate that CLECs believe that they should be able to take advantage of the Power Fuse Reduction feature to increase (not decrease) fuse sizes at nominal charges. This request should be rejected. It perverts the fundamental purpose of the Power Fuse Reduction feature and does nothing to facilitate compliance with Rule 785.55(a)(1). Equally important, the CLEC proposal would prevent AT&T Illinois from recovering its costs for services it performs when it increases the fuse size at a CLEC's request. CLECs commonly have to pay both to increase and decrease fuse sizes. For example, in New York (*In Re Verizon New York, Inc.*, Order Adopting The Terms of a Joint Proposal, Case 03-C-0980 (April 14, 2004) at 5), the Commission approved a settlement agreement in which the parties agreed that an $850 non-recurring charge applies to increasing or decreasing the fuse size.

AT&T Illinois' agreement to waive charges to *decrease* fuse sizes to achieve a public policy purpose of compliance with Commission Rules should not be used opportunistically by CLECs to achieve a free ride when they need to increase fuse size to accommodate network growth.[21]

10. Language Dispute 10: Should AT&T Illinois Be Limited To One (1) Audit Per Year?

Section Reference: Paragraph 21A

There is no dispute that an audit process is required. Joint CLECs first suggested that there be an audit process (Jt. CLEC Ex. 2.0 at 1361-1365) and AT&T Illinois responded by proposing a specific audit process in Paragraph 21A. The question presented is whether AT&T Illinois should be limited to one (1) audit per collocation arrangement, per calendar year (as the Joint CLECs propose) or whether these should be no pre-determined cap on the number of audits (as AT&T Illinois proposes).

The "per amp" proposal is based on a "trust me" system of billing (i.e., AT&T Illinois bills for the power the CLEC says it is using), so AT&T Illinois needs the ability to verify that the CLEC is reporting accurate information. AT&T Illinois is not *required* to perform any audits under this proposal, but it needs the *ability* to perform them as often as required to ensure

[21] During the hearing, the question arose whether AT&T Illinois would recover more of its power infrastructure costs if the waiver of charges under the "Power Fuse Reduction" feature applied to *increases* (not just decreases) of fuse sizes. It would not. A waiver of charges would provide no incentive for CLECs to use more DC power because power is not an input that is used more intensively when its price falls. Rather, demand is inelastic, i.e., the DC power required is a function of the type and amount of equipment that the CLEC requires to serve its customers. Accordingly, there is no reason to believe that CLECs would purchase more DC power (and thereby assist AT&T Illinois to recover more of its power infrastructure costs) if the non-recurring charge were waived when the CLEC desires to increase its fuse size. Moreover, a CLEC that needs more power to accommodate network growth is winning business and can afford to pay the charge which, after all, compensates AT&T Illinois for the work it performs to change a fuse.

accurate reporting. Just the prospect of an audit will often be enough to encourage CLECs to make accurate self-certifications.

The limitation of one audit per year per collocation arrangement undermines one of the principle purposes of the audit. The audit is intended not only to detect usage that is greater than the self-certified amount; it is intended to encourage CLECs to submit accurate self-certifications in the first place. AT&T Ill. Ex. 5.2 at 15. If Joint CLECs' suggestion was adopted and AT&T Illinois conducted an audit at the beginning of the year, the CLEC would know that any usage above the self-certified amount would be undetectable for the remainder of the year. The incentive to "game" the system under these circumstances would be too great and would undermine the entire arrangement.

Joint CLECs contend that more than one audit per year would subject them to undue administrative burdens. This concern is not well-grounded. First, the audit itself is a process that does not require any CLEC participation. It consists only of AT&T Illinois taking a measurement of the power delivery arrangement and comparing that against the most recent CLEC self-certification. AT&T Ill. Ex. 5.2 at 13. It does not involve any review of CLEC records, any interference with CLEC operations or even the participation of CLEC personnel. Id. Second, while it is true that CLECs may need to devote resources to a dispute resolution process, those disputes should be minimized because of the "dead zone" built into the AT&T Illinois audit proposal. As we explained in Language Dispute 11, below, there is no backbilling or bill adjustment for any audit measurement which shows that CLEC is using between 1% and 9% more power than it reported on its latest self-certification. Since CLECs are not impacted at all by audit results in this range, there will be no need (or possibility) for a dispute. In fact, the CLEC will not even receive notice of audit results which do not result in a billing adjustment. It

is only those audit results that detect usage at least 10% greater than the certified amount (and at least 5 amps) that will result in any consequence to the CLEC and it is only those audit results that the CLEC could conceivably be interested in disputing. Since these are situations in which the CLEC is using substantially more power than it reports to AT&T Illinois, and since these are situations that are within the CLEC's ability to prevent by reporting accurately, CLECs have little standing to argue about the burden of engaging in dispute resolution. Indeed, the very premise of the CLEC objection on this issue is somewhat strained. They argue that they should not have to expend resources on audits, but the only audits that will require them to do so are those which reveal significant *over usage* of power which would not have occurred if the CLEC accurately self-certified in the first place.

Finally, the Joint CLEC concern about excessive audits is speculative. AT&T Illinois' expectation is that, once implemented, this process will be conducted on a business-like basis with most CLECs. AT&T Ill. Ex. 5.2 at 16. Over time, AT&T Illinois will conduct a certain number of audits and will be able to determine those CLECs that are submitting accurate self-certifications and those that are not. For those CLECs with whom AT&T Illinois is able to establish a reliable working arrangement, audits will be an infrequent occurrence. On the other hand, there may be a handful of CLECs for whom audits will be required on a more frequent basis. For this reason, the Commission should not establish any limitation on the number of audits that can be conducted by AT&T Illinois within a given year, but should allow the system to operate. If it turns out that audits are genuinely burdensome to CLECs, then the Commission can fine-tune this aspect of the proposal at a later date.

11. Language Dispute 11: Should AT&T Illinois Be Required To Provide CLEC With Notification Of The Audit Results For All Audits, Or Only For Those Audits That Actually Impact The CLEC?

Section Reference: Paragraph 21A

AT&T Illinois has agreed to provide CLECs with extensive information regarding the results of an audit, including the date and the time of the validation; the location of the collocation arrangement audited (by CLLI, fuse position and bay); the equipment used to perform the audit (by manufacturer and model) and the number of amps measured. *See* Schedule RAS-14, Paragraph 21A. AT&T Illinois has also agreed to provide such audit results within 30 days of the validation. Id. AT&T Illinois is only willing to provide this extensive information, however, when the audit actually has some consequence for the CLEC, i.e., when it results in a billing adjustment going forward or in retroactive backbilling. These are the only situations in which the CLEC can have a legitimate claim to the audit information and in which the CLEC can have a reasonable expectation of putting AT&T Illinois to the expense of providing the information for free. Without some immediate billing consequence to the CLEC, there is no basis to require AT&T Illinois to bear the expense and administrative burden of preparing and providing the information.

The Commission should keep in mind that AT&T Illinois is performing the audits for its own benefit in order to ensure compliance with the "per amp" program - it is not performing a service for the CLEC. It is telling that Joint CLECs elsewhere propose that AT&T Illinois should be required to take measurements and provide the resulting information for a fee. *See*, e.g., Jt. CLEC Ex. 2.2 at 419-449. Here, Joint CLECs do not even offer to pay for the measurement information - they seek information for free. For the reasons explained in Language Dispute 5 above, it is not appropriate to require AT&T Illinois to take measurements

for the CLECs at all. Those same reasons apply here more forcefully because CLECs seek the service for free.

12. Language Dispute 12: Should AT&T Illinois Be Required To Cooperate With CLECs To Prepare A Standard Notification Form?

Section Reference: Paragraph 21A

In a proposal that is explained nowhere in Joint CLEC testimony, they propose that AT&T Illinois be required to cooperate to prepare a standard notification form that contains the agreed-upon notice information. This is a pointless requirement because AT&T Illinois and the CLECs have already agreed upon the information that must be provided (*See* agreed-upon language in paragraph 21A of Sch. RAS-14), so it will be a simple matter for AT&T Illinois to prepare the notification form which will convey this information to CLECs. There is no reason to burden AT&T Illinois with the requirement that it work with all of the Joint CLECs to prepare this form. Such a requirement could only lead to unnecessary disputes which may have to be resolved by the Commission, with the attendant delay and expense.

It is also unclear how AT&T Illinois would discharge such a duty. Would it have to contact all CLECs that purchase DC power to solicit their input, or only those involved in this proceeding? Would a CLEC that believed it was not included in the process be able to challenge a notification form that was agreed to by other CLECs?

Finally, if Joint CLECs had some specific objective in mind which they hoped to achieve, they could have offered testimony on that point or proposed specific language to AT&T Illinois to see if it was acceptable. They did not do so, further demonstrating why their request is unjustified and should be rejected.

13. Language Dispute 13: Should AT&T Illinois Be Required To Adjust A CLEC's Billing If The Audit Result Indicates That Actual Usage Is Less Than The Certified Amount?

Section Reference: Paragraphs 21B and 21C

Joint CLECs want AT&T Illinois to automatically adjust their billing downward based on the results of an audit. This proposal should be rejected because AT&T Illinois is only auditing to detect usage that is higher (not lower) than the certified amount. Therefore, the only adjustments AT&T Illinois should be required to make as a result of its audit are increases that reflect usage that is higher than certified amounts. The sole purpose of the audit is to protect AT&T Illinois from inaccurate CLEC self-certifications; it is not intended to address any situation where a CLEC's usage may have fallen below its self-certified amount. This is in no way punitive or unfair to CLECs. Indeed, it is the CLEC's responsibility to manage its own network and to provide AT&T Illinois with accurate and up-to-date information on its actual usage. A CLEC has ample opportunity to do this in either of the two semi-annual certifications, or at any time during the year when its actual usage falls below its most recent self-certified amount. *See*, e.g., Tr. at 254-255 (Turner). Moreover, a CLEC is in the best position to know when it has made equipment changes that will cause its actual usage to fall below its most recent certified amount, so it should be solely responsible for reporting those changes to AT&T Illinois. In short, the audit process will be used by AT&T Illinois to protect itself from over-usage of DC power; the self-certification process will be used by the CLEC to protect itself from any instances of under-usage of DC power.

CLEC's proposal presents another problem; Qwest claims that some CLECs may want to self-certify an amperage load that is greater than their actual draw. Tr. at 560-561 (Hunnicutt-

Bishara).[22] If that is so, the Joint CLEC proposal would require AT&T Illinois to automatically reduce the CLEC self-certified amount against the wishes of the CLEC. This further illustrates why the CLEC is in the best position to determine whether its self-certified amperage amount is too high and make an adjustment, if it wants to do so.

It should not escape the Commission's notice that the Joint CLEC proposal would require AT&T Illinois to, once again, provide a free measurement service to CLECs and would force AT&T Illinois to do the work that CLECs should be doing for themselves. It shifts the expense and the obligation of managing the CLEC network from the CLEC to AT&T Illinois. To repeat, the "per amp" proposal establishes distinct roles for AT&T Illinois and for CLECs. CLECs are required to ascertain and report their actual usage; AT&T Illinois is required to bill on that basis. It is permitted, however, to double check the accuracy of the CLEC certification by conducting audits. Those audits are for the sole benefit of AT&T Illinois and are solely intended to provide a safeguard against inaccurate certifications. The Joint CLEC proposal would blur these distinct roles and would undermine the operation of the "per amp" system. It should be rejected.

14. Language Dispute 14: Should The Collocator Represent And Warrant That, Under Normal Operating Conditions, It Will Not Draw More Than Its Collocator-Specified Amperage Load?

Section Reference: Paragraph 17

AT&T Illinois originally proposed to insert the following language in Paragraph 17:

> Under this provision the Collocator represents and warrants that it at no time will draw more than its Collocator-Specified Amperage Load on the DC power leads provided by AT&T Illinois for a power arrangement.

This language is necessary because the power delivery arrangements will be fused at a capacity much higher than a CLEC's actual usage and nothing prevents a CLEC from using power up to

[22] AT&T Illinois does not see why this would be desirable. It is certainly not necessary.

the fused capacity. AT&T Ill. Ex. 5.0 at 13. CLECs are adamant that they should not be charged for the fused capacity, but only for their actual usage. The proposed language merely holds CLECs to their word by having them represent and warrant that they will, in fact, use only the amount of power they certify to AT&T Illinois.

This language should be unopposed by Joint CLECs because it is substantially similar to language which they themselves inserted in Paragraph 16A and which AT&T Illinois accepted:

> This Certification will also contain a statement by a responsible officer of the Collocator, which attests that Collocator is not exceeding the total load of power as reported on the Certification.

Jt. CLEC Ex. 2.2, Attch. SET-3, Para. 16A, Second Paragraph. Given this Joint CLEC-proposed language, they should have no objection to the language proposed by AT&T Illinois for Paragraph 17. Both provisions require the CLEC to promise that its actual usage will not exceed its certified usage.

AT&T Illinois also agreed to a modification suggested by Joint CLECs to make this language even more reasonable. During the cross-examination of AT&T Illinois witness Roman Smith, Mr. Smith agreed that it would be reasonable to add additional language to the CLEC-originated phrase that appears at the end of Paragraph 16A, First Paragraph.[23] Mr. Smith agreed to add the words "under normal operating conditions". The same change is appropriate for AT&T Illinois' proposed language in Paragraph 17, so the AT&T Illinois proposed language for Paragraph 17 now reads as:

> Under this provision the Collocator represents and warrants that, under normal operating conditions, it will not draw more than its Collocator-Specified

[23] The language at the end of 16A, First Paragraph was originally proposed by Joint CLECs. *See* Attch. SET-3, Section 16A, Second Paragraph. Tr. at 263 (Turner). AT&T Illinois proposes to duplicate that language in 16A, First Paragraph so that it will be abundantly clear that the certification is required for the initial certification for *existing* power delivery arrangements, as well as for initial certification for *new* power delivery arrangements. It is a little ironic that CLECs cross-examined Mr. Smith about this language when he was merely accepting language which Joint CLECs themselves proposed.

> Amperage Load on the DC power leads provided by AT&T Illinois for a power arrangement.

Given this modification, it appears that this language is now acceptable to both Joint CLECs and AT&T Illinois and should be approved by the Commission.

15. Language Dispute 15: Should Joint CLEC-Proposed Language At The End Of Paragraph 21D Be Included?

Section Reference: Paragraph 21D

Joint CLECs propose to insert the following language at the end of Paragraph 21D:

> If the dispute is resolved in favor of Collocator, Collocator will not be required to reimburse AT&T Illinois for its cost of the Audit and any amounts paid based on the AT&T Illinois updated Audit results will be subject to true-up.

Joint CLECs did not offer any argument to explain why this language should be adopted. Mr. Smith, on the other hand, offered two reasons why it should be rejected.

First, the language that "Collocator will not be required to reimburse AT&T Illinois for its cost of the Audit" would undermine the audit provision by opening up disputes about whether, and to what extent, CLECs should reimburse AT&T Illinois for the cost of the audit. In the agreed-upon portions of Paragraph 21D, Joint CLECs agree that if a Collocator uses 20% more power than disclosed on its certification and that amount is at least 5 amps, AT&T Illinois can recover the cost it incurs to conduct the audit and to adjust the billing. The CLEC-proposed language would permit it to avoid that responsibility altogether if "the dispute is resolved in favor of Collocator". Does that mean that the entire dispute must be resolved in Collocator's favor? Or, does it mean that Collocator avoids any audit costs if it prevails on some, but not all of its dispute? Those questions need not be answered, because the agreed-upon sections of the proposed tariff already provide the solution: whatever the discrepancy is at the end of the dispute resolution process is the discrepancy that applies. So, if AT&T Illinois gives notice of an

audit that shows a CLEC has used more than 20% of its certified amount at a power delivery arrangement, and that the excess usage is greater than 5 amps, but that amount is reduced through the dispute resolution process to only a 15% discrepancy, no audit costs will apply. If, however, the result of a dispute is to reduce a discrepancy from 25% to 22%, by the agreed-upon terms of the audit provisions, the CLEC would be responsible for the full audit costs. This is the result under the agreed-upon language in Section 21D and the Joint CLEC proposed language merely confuses, and potentially undermines, this result and should be rejected.

Second, Joint CLECs' proposed language says that any amounts paid based on the audit results will be subject to true-up. This language should be rejected because it raises a true-up issue where one does not exist. Again, agreed-upon language in Paragraph 21D says that any disputes will be resolved "using the dispute resolution processes included in the respective interconnection agreement or found in the tariff". Those dispute resolution processes routinely provide terms and conditions for payment of disputed amounts during the dispute resolution process. As Mr. Smith explained on cross-examination, it is AT&T Illinois' expectation that it would not insist on payment of a disputed amount during the pendancy of the dispute. Tr. at 153, 213-214 (Smith). (Those amounts would probably be billed -- just not collected). Regardless of what those provisions say, the point is that the parties have already agreed that those other dispute resolution processes will apply, so there is no need to add additional language in Paragraph 21D to address what happens to any payment of disputed amounts.

V. CLEC PROPOSALS TO RETAIN POWER METERING IN ANY FORM SHOULD BE REJECTED

A. SUPPLY-SIDE METERING WITH SHUNT BARS IS NOT A VIABLE SOLUTION

CLECs make no affirmative recommendation to require supply-side metering using shunt bars. Instead, they take the half-hearted approach of merely suggesting this as an alternative that the Commission should consider. Jt. CLEC Ex. 2.0 at 718-719; Jt. CLEC Ex. 2.1 at 536-538. This tepid endorsement by Joint CLECs is not surprising in light of the serious problems with this proposal: 1) it creates unnecessary risks to personnel safety and network reliability; 2) it complicates central office operations by creating congestion in the cable racks; 3) it disrupts CLEC operations; and 4) it is extraordinarily expensive to implement. Because of these serious drawbacks it has not been implemented anywhere in the United States. AT&T Ill. Ex. 3.1 at 5. It should not be implemented in Illinois, either.

1. Safety and Reliability. The personnel safety and network reliability issues arise because power metering, by its nature, requires that DC power circuits be broken in order to install the shunt bars on the supply-side. AT&T Ill. Ex. 3.0 at 14. The installation process itself is dangerous because it requires work on fully-powered equipment and live power cables. Id. at 14. Workers in this environment could receive a shock or could create a short-circuit leading to equipment failure.

These dangers persist even after shunts are installed on supply-side circuits. A shunt is an exposed plate of metal approximately 6 inches long that connects pieces of the power cable and therefore carries a full electric load. If it inadvertently comes into contact with a technician, a tool or any other object, an electric "short" will be created that can harm the technician and the telecommunications equipment. AT&T Ill. Ex. 3.0 at 15.

There are far more shunts with supply-side metering than there are with return-side metering. Mr. Nevels testified that there are about 15,000 DC power cables serving CLECs in Illinois, (Tr. at 379), so the supply-side metering solution would require 15,000 shunt bars and shunt bar assemblies. This is 7 to 10 times greater than the number of return-side shunts because up to 10 return-side power cables can be aggregated at a single shunt. Each supply side power cable, on the other hand, requires its own shunt. AT&T Ill. Ex. 4.0 at 16-17. (See AT&T Ill. Ex. 4.0, Sch. JM-1 p. 24 for a picture of two shunt bar assemblies in overhead racking). Each of these 15,000 exposed shunt bars would be in locations where a technician or tool could come in contact with a live power circuit, thus causing a short-circuit. AT&T Ill. Ex. 3.0 at 15-16. An electrical short will likely cause CLEC equipment that is powered by the shorted circuits to lose power. The equipment of other CLECs and AT&T Illinois could also be disrupted. Moreover, personnel injury can also result because when electrical direct short occurs, the conductor that causes the short will usually melt or disintegrate, resulting in sparking, heat, and an extreme white flash. AT&T Ill. Ex. 3.0 at 15-16. This could burn, shock, or temporarily blind anyone working in the area.

Joint CLECs argue that AT&T Illinois uses shunts in return-side power metering, so that there is no increased danger to network reliability or personnel safety in a supply-side metering situation. Jt. CLEC Ex. 1.0 at 1020-1039. This is wrong for at least three reasons. First, it ignores the fact that supply-side metering requires seven to ten times as many shunts as return-side metering. These additional shunts increase the likelihood that a shunt bar will come into contact with a technician or a tool, thus causing an electric short. AT&T Ill. Ex. 3.1 at 6. Second, supply-side shunts carry more power than return-side shunts, (return-side shunts are close to the ground potential of central office - supply-side shunts are not), so a blown fuse or an

electric short is more likely on the supply-side. AT&T Ill. Ex. 3.1 at 7. Third, because there are multiple supply-side feeds (and therefore multiple shunts) to a CLEC's equipment, a short to one feed will force the entire load running across that shunt to another feed. The routing of all the power from the BDFB to the remaining feed can create an overload that can damage or destroy the CLEC's equipment or the equipment of another carrier. AT&T Ill. Ex. 3.0 at 15.

Joint CLECs also argue that these safety concerns can be eliminated by placing "casings" over the shunts. Jt. CLEC Ex. 2.0 at 48. These casings may mitigate the safety issue, but the level of mitigation would be rather small because even with the casing a shunt is still an additional fault point in the network. Anytime that a shunt is worked on, the casing must be open and the risk of network failure and personnel injury still exists. AT&T Ill. Ex. 3.1 at 7-8. Shunt casings also increase administrative complexity. It is easy to understand that 15,000 shunt casings, with 15,000 locks, would be a challenge to maintain and administer. Id. at 8.

2. <u>Central Office Congestion.</u> The supply-side metering proposal will also exacerbate cable racking congestion. Cable racking consists of framework which is connected to bays to support cabling between them. These cable racks generally run overhead in order to keep cables organized and out of the way of central office personnel and equipment. In a supply-side metering architecture, the shunt assembly, shunt bars, shunt covers and the PMU leads would all have to go in the cable racking (but would have to remain accessible), exacerbating congestion where it already exists and creating congestion where it does not. AT&T Ill. Ex. 4.0 at 17. (*See* Schedules JM-1 p. 24 for a picture showing the size of a shunt bar assembly). Technicians need to have enough room to work and to efficiently identify the desired cable from the many cables in the rack, and any additional congestion complicates the work they must do. AT&T Ill. Ex. 3.1 at 11. Joint CLECs argue that congestion is not a "sufficient reason" to reject a supply-side

solution, Jt. CLEC Ex. 2.0 at 1096-1099, but cable congestion is just one of several reasons why supply-side metering is not a workable solution.

Overhead cable racks are very small areas to begin with, and because overhead cabling can take up a large amount of the limited space in cable racking, any additional equipment placed in these racks would only add to the congestion. Joint CLECs concur with this assessment elsewhere in Mr. Turner's direct testimony, where he states that DC power cables take up "a significant amount of space in overhead racking". Jt. CLEC Ex. 2.0 at 1324-1325.

3. <u>Disruption to CLECs.</u> The third reason to reject shunt-based supply-side metering is because the installation of shunts on the supply-side would disrupt CLEC operations. AT&T Ill. Ex. 3.1 at 9. Each DC power circuit serving CLECs must be broken in order to install the shunt, interfering with the power flow to the CLEC equipment. Joint CLECs concede that this process involves "challenges", but otherwise dismiss the concern. Jt. CLEC 2.0 at 1040-1052. Joint CLECs contradict themselves on this point, however, when Mr. Turner cautions against changing fuses on the power leads used by CLECs (the same leads that would have to be broken to install supply-side shunts), because it "creates the risk of service problems associated with removing the fuse" in which "the collocators telecommunications equipment will be left with no power and will fail". Jt. CLEC Ex. 2.0 at 1350-1354. Thus, it appears the Joint CLECs really do understand that breaking the cable to install supply-side shunts creates significant risks that must be factored in the overall evaluation of their supply-side metering proposal.

4. <u>Supply-Side Metering is Very Expensive.</u> Finally, shunt-based supply-side metering is prohibitively expensive. AT&T Illinois witness Bill Vangel testified that a conservative estimate of the cost is between $11 million dollars and $15 million dollars. AT&T Ill. Ex. 2.1 at 7-8. The existing return-side metering architecture costs about $3.8 million dollars. Mr. Vangel

reasoned that a supply-side architecture would require from seven to ten times as many shunts and six times as many PMUs as the return-side metering arrangement, Id. at 7; AT&T Ill. Ex. 4.1 at 2, so the cost of the supply-side metering system would be three or four times higher than the return-side metering system -- or somewhere between $11,000,000 and $15,000,000.

Consistent with the principles of cost causation, these costs would be "directly attributable" to CLECs, so any such costs would have to be recovered directly from CLECs in the form of higher DC power rates.[24] Since it is extremely unlikely that any increase in accuracy attributable to supply-side metering would be worth this additional expense, there is no justification for shunt-based supply-side metering. And the Commission need not take AT&T Illinois' word for it. Shunt-based supply-side metering has not been implemented anywhere in the United States. This fact, standing alone, is persuasive evidence that all of the problems listed above are real impediments to shunt-base supply-side metering. The Commission should reject this alternative.

B. SUPPLY-SIDE METERING WITH SPLIT CORE TRANSDUCERS IS NOT A VIABLE SOLUTION

Joint CLECs also suggest that AT&T Illinois could employ split core transducers to meter DC power on supply side power cables. Mr. Turner opines that split core transducers "can easily be installed around the DC power cable without 'opening' the cable. I see absolutely no technical or financial reason that this installation could not take place within the existing collocation arrangements." Joint CLEC Ex. 2.0 at 49. It is unclear, however, whether the Joint

[24] FCC Rule 51.505 (b) states that "The total element long-run incremental cost of an element is the forward-looking cost over the long run of the total quantity of the facilities and functions that are *directly attributable to, or reasonably identifiable as incremental to*, such element, calculated taking as a given the incumbent LEC's provision of other elements. (emphasis added).

CLECs have actually made split core transducers part of their proposal in this case. Mr. Turner describes the method only as "an available option". Id. If Joint CLECs are asking the Commission to mandate AT&T Illinois to use split core transducers, that request should be rejected. The evidence adduced in this proceeding establishes that split core transducers are unworkable for many of the same reasons that supply-side shunts are unworkable and hazardous to the network. And, like supply-side shunts, no ILEC in the nation has deployed a split-core transducer metering system and no Commission in the nation has required that they do so. This Commission should not be the first.

Joint CLECs have provided almost no support for their proposition. Mr. Turner's testimony dedicates only a couple of questions and answers to the subject. He provides a description of split core transducers ("like a square metal donut that has been sawed in half so that each of the two halves can be placed around the DC power cable being metered without having to disconnect the DC power cable"), which, while nominally accurate, is not helpful because AT&T Illinois does not dispute that these devices exist. Jt. CLEC Ex. 2.0 at 49; *see also* Tr. 355 (Nevels). He also references a "white paper written by Peco II", which is a manufacturer of "Hall Effect Transducers", presumably a type of split core transducers. *See* Jt. CLEC Ex. 2.0 at Attch. SET-2. But this document is barely more than an advertisement. It provides only a single paragraph describing transducers, and supplies no detailed information regarding their operational characteristics, installation requirements, accuracy, ease of use, or any of the other relevant criteria that the Commission would require to make an informed decision. Finally, Mr. Turner opines without detailed explanation that because split core transducers are not part of the electrical circuit, they "pose no risk toward causing a short", and that split core transducers will not cause cable racking congestion because in his view "while… DC Power cables are often

congested, the majority of this congestion is nearer to the BDFB" and not near to the collocation arrangements where split core transducers would be placed. Jt. CLEC Ex. 2.0 at 51. Mr. Turner bases his opinion solely on his experience of reviewing collocation arrangements "in a large number of central offices across the country…" and provides no studies or data that would provide factual support for his observations or that this is true of AT&T Illinois' central offices. Id.

Based upon this paucity of information, the Commission has no real record to consider regarding the Joint CLECs' "alternative proposal" to require AT&T Illinois to install split core transducers. Indeed, that was precisely the opinion of Staff witness Ms. Stewart when she was asked whether AT&T Illinois should be required in this proceeding to install split core transducers. She answered: "I don't believe that we have enough information available to us as to the accuracy and reliability of split core transducers to make a recommendation one way or another." Tr. at 618.

In contrast, AT&T Illinois submitted testimony raising serious questions regarding the use of split core transducers. AT&T Illinois witness Nevels explained that split core transducers are hardly a viable alternative for power metering in Illinois. First, they involve many of the same problems associated with the installation of power shunts, i.e., they create further congestion in the overhead cable racking and complicate the job anytime the power cable needs to be worked on. The only reason why a split core transducer would be somewhat less difficult to install is that it does not require that the live power cable be broken. Split core transducers do not present the danger of exposed metal shunts (as is the case with supply side shunts), but this consideration is counter-balanced by need to constantly re-calibrate the split core transducer to

make sure that it has not been thrown off by changing magnetic fields caused by other electrical equipment in the area. AT&T Ill. Ex. 3.1 at 14.

Second, the cost of a supply side measurement system using split core transducers would be roughly the same as the cost of a shunt-based system. In the section above we explained that a shunt-based system would cost between $11,000,000 and $15,000,000. The cost of a split-core transducer would be the same because it requires a split-core transducer on each of the 15,000 CLEC power cables, it requires that each of the 15,000 devices be wired directly to a PMU, and it requires 6 times more PMUs to measure those 15,000 cables. A major difference is that the installation of a split core transducer does not require that the live power cable be broken, but any cost savings associated with that is off-set by the cost incurred to power the tranducers (discussed below) and to constantly recalibrate the split core transducers. While the exact cost of a split core transducer system is unknown, AT&T Illinois' evidence that it would be between $11,000,000 and $15,000,000 is un-controverted and - standing alone – requires that the split core transducer alternative be rejected.

Third, Mr. Nevels identified several problems unique to split core transducers that were unmentioned and unexplained by Mr. Turner. For example,

- Split core transducers are affected by magnetic disturbance, which can affect their ability to accurately measure power. AT&T Ill. Ex. 3.1 at 13; Tr. at 328 (Nevels).

- Split core transducers require calibration and recalibration. When they are installed, split core transducers must be calibrated to take into account the surrounding electromagnetic environment. Any changes to the environment around the transducer (e.g., adding or removing equipment, other split core transducers, cables being moved or added, etc.) would require the split core transducer to be recalibrated. AT&T Ill. Ex. 3.1 at 14; Tr. at 359-61 (Nevels).

- Split core transducers require extensive installation work. The DC power cables that would be measured using split core transducers are physically sewn together and are further sewn into the frame with twine or cord so that it is not safe to attempt to place a split core transducer around the power cable. In order to create

a place where a split core transducer could be placed around the power cable, the cable would have to be pried away from the frame, but this could not be done without harming the integrity of the power cabling. AT&T Ill. Ex. 3.1 at 14-15; Tr. at 354-58 (Nevels), 376-77 (Nevels).

- Once the cables are un-sewn and pried away from the frame, and once a separate split-core transducer is placed around each cable, the size of the split-core transducer prevents or interferes with the cable being re-sewn. This violates AT&T Illinois technical publications that require power cables to be sewn together and attached to the frame. AT&T Ill. Ex. 3.1 at 15; Tr. at 376 (Nevels).

- Split core transducers have unique power requirements. Most split core transducers require between a 10 to 28 volt input. These types of transducers would require new input leads and 24 volt converter plants to power them. AT&T Illinois does not have 24 volt converter plants in its central offices and would have to purchase these to power the split core transducers. AT&T Ill. Ex. 3.1 at 15; Tr. 377-78 (Nevels).

- Split core transducers are not commonly used to meter collocation power supply and are untested within AT&T's or any other ILEC network. Neither AT&T Illinois nor any of its ILEC affiliates currently use split core transducers to meter collocation power supply in their central offices. Both Mr. Nevels and Staff witness Ms. Stewart testified that they were unaware of any other ILECs that use split core transducers to meter CLEC power consumption. AT&T Ill. Ex. 3.1 at 15; Tr. 618 (Nevels).

In sum, the Joint CLECs have failed to submit sufficient evidence that describes the use, accuracy, installation, safety record or other operational aspects of split core transducers and therefore have not established that split core transducers are a viable option. AT&T Illinois has identified serious and unresolved issues regarding their use and has demonstrated that the cost of this approach is prohibitively expensive. Given the record before it, the Commission should reject this alternative approach.

C. SUPPLY-SIDE METERING WITH HAND HELD METERS IS NOT A VIALBE SOLUTION

Joint CLECs suggest a completely new approach that would require AT&T Illinois to bill based on periodic measurements taken by AT&T Illinois. CLECs would have no role in this

process: they would not be responsible for knowing how much power they are using; they would not be responsible for measuring their power leads; and they would not be responsible for telling AT&T Illinois when their usage increases or decreases over time. There are several problems with the Joint CLEC's one-sided proposal.

First, the Joint CLECs say that their proposal is appropriate because AT&T Illinois seeks to "place all of the administrative and operational burdens on the Collocators". Jt. CLECs Ex. 2.2 at 239-240. This fundamental premise of the Joint CLEC proposal is mistaken. Mr. Turner is looking at only half of the equation. While it is true that the expense of providing the self-certification falls upon the CLEC, that is only one aspect of the overall process. This is a "trust me" system in which AT&T Illinois agrees to bill based on the CLEC's self-certification. AT&T Illinois can protect itself from under-reporting by taking its own measurement (i.e., an "audit"), but the cost of those audits fall completely on AT&T Illinois, except in fairly rare cases. Moreover, AT&T Illinois has liberally agreed that no billing adjustments will occur even if an audit reveals that the CLEC has been using as much as 9% more power than it certified. The costs of any such discrepancies again fall on AT&T Illinois alone. It is only when actual usage is 10% or more than the certified amount, and when that discrepancy is at least 5 amps, that AT&T Illinois will attempt to back bill a CLEC. For these reasons, the overall "per amp" proposal allocates the burdens and expense to both AT&T Illinois and CLECs.

It is also a mistake for Joint CLECs to say that providing physical measurements of their DC power usage creates a undue hardship for them. Mr. Turner testified that it takes only about 5 minutes to conduct the measurement in question. Tr. at 250. He also testified that CLECs will be present at their collocation arrangements about once every six months -- or twice a year. Tr. at 253. AT&T Illinois is not requesting that CLECs take measurements any more frequent than

that, so they should be able to perform the requested measurements in the ordinary course of business and without undue hardship.

Second, AT&T Illinois perceives serious administrative difficulties with this proposal. Under AT&T Illinois' "per amp" proposal, the CLEC is required to submit an updated self-certification when ever it changes the amount of power it uses. So, for example, if it activates or deactivates equipment already present in the collocation arrangement, and that action affects its power usage, the CLEC will inform AT&T Illinois. Everyone agrees that this is a necessary and desirable for the CLEC to change its certified amount when its actual usage changes. Staff Ex. 1.0 at 17; Jt. CLEC Ex. 2.2 at 332-335. Under the Joint CLEC "hand held metering" proposal, however, AT&T Illinois will not know when CLEC equipment reconfigurations change the actual usage. This, in turn, will guarantee that AT&T Illinois' measurements will be incorrect. For example, assume that AT&T Illinois takes a reading in January and determines that a CLEC is drawing 21 amps of power, and bills on that basis. Assume further that in February, the CLEC deactivates equipment in the collocation arrangement and lowers its actual usage to 10 amps. AT&T Illinois would continue to bill the CLEC for 21 amps of power until the next actual measurement, and each of those monthly billings would be inaccurate. This can result in overbilling (as illustrated in the above example) or underbilling. In either case, the "hand held metering" proposal has built-in inaccuracy.

Third, the Joint CLEC "hand held metering" proposal absolves them from any responsibility for managing their own networks and for working cooperatively with AT&T Illinois to manage the vendor/customer relationship. CLECs, as the buyers of DC power, should at least be required to tell AT&T Illinois how much DC power they wish to buy so that AT&T

Illinois can bill them on that basis. It is a normal part of any business transaction for the buyer to tell the seller how much it wishes to purchase - that is all AT&T Illinois is asking here.

The "hand held metering" proposal also increases the likelihood of disputes because the CLEC never determines the actual amount of power it needs. The CLEC will naturally be uncertain whether AT&T Illinois is billing it the proper amount and an easy way for the CLEC to test those bills will be to file a dispute.[25] These disputes will inevitably end up at the Commission, and will further burden the scarce resources of the Commission and Staff in dispute resolution processess. Under the AT&T Illinois' "per amp" proposal, on the other hand, billing is based on the CLEC's own self-certification, so disputes are minimized.

Qwest claims that its usage of DC Power is variable and that a measurement taken at a single point in time might overstate its actual usage. Tr. at 562 (Hunnicutt-Bishara). AT&T Illinois disagrees with this contention, but if it is so, a "hand held metering" approach would work to Qwest's detriment because it would be stuck with the reading taken by AT&T Illinois. Under the AT&T Illinois approach, in contrast, Qwest self-certifies its draw and must warrant only that, *under normal operating conditions*, its actual usage will not exceed the certified amount.

Finally, the Joint CLEC "hand held metering" proposal places all of the administrative burden and expense on AT&T Illinois, and does so without the ability to recover for the extra work of taking the measurements on behalf of the CLECs. While Mr. Turner gives lip service to the development of a rate, Jt. CLEC Ex. 2.2 at 263-274, he says that AT&T Illinois could pursue such a charge in the future, virtually guaranteeing that CLECs would receive this service for free for at least eleven months after the resolution of this proceeding.

---

[25] Of course, the CLEC could perform an actual measurement to verify that AT&T Illinois' billing is correct, but this raises the question why the CLEC would not simply perform that measurement and report its actual usage to AT&T Illinois in the first place.

For all these reasons, the Commission should reject the "hand held metering" proposal and should instead adopt the AT&T Illinois' "per amp" proposal.

D. RETURN-SIDE METERING CANNOT BE FIXED BY USING AN ADJUSTMENT FACTOR

Since the return-side measurement system is significantly inaccurate, could the Commission apply a readjustment factor to achieve sufficient accuracy for its continued use? It would be a completely unworkable solution and there is no basis in the record that would allow the Commission to adopt a readjustment factor as a solution to the flaws identified with return-side metering.

Significantly, no CLEC appears to support readjustment of return side meter measurements as a solution. In fact, during the hearing, Qwest objected to a question posed to Staff witness Ms. Stewart that suggested Qwest was making such a proposal:

> Q. Another proposal that has been made in this proceeding – I believe Qwest made this proposal – was to leave the existing return side metering in place but to adjust for leakage by increasing the per-amp charge. Are you familiar in general with that proposal?
>
> A. Yes, I am
>
> MR. SHERR: Your Honor, if I can interpose an objection, I don't think Mr. Ortlieb is intending to do this but I believe he's mischaracterizing Qwest's testimony.
>
> Qwest did not make that proposal. It identified that as a possibility and a solution that AT&T could have consider, but it is not Qwest's proposal. So, I just want that to be clear for the record.
>
> MR. ORTLIEB: Well, in view of the fact that if Qwest is not proposing that solution, I'll withdraw the question.

Tr. 618-19. Since no party is affirmatively sponsoring this approach, the Commission should not consider it further.

Qwest testimony suggested that, as an alternative method to address the leakage problem, AT&T Illinois should have considered retaining the existing metering system, and increasing AT&T Illinois' current rate for DC Power (charged in kilowatt hours) to adjust for the amount of leakage. QCC Ex. 1.0 at 7-8. Ms. Hunnicutt-Bishara states the appropriate adjustment would be in the neighborhood of 15%. Such an adjustment provides no practical solution to the current problems with return side metering. AT&T Illinois witness Mr. Smith and Staff witness Mr. Hanson identified several key problems with Qwest's suggested approach. *See* AT&T Ill. Ex. 5.1 at 29-30; Staff Ex. 2.1P at 2.

First, the proposal is flawed because it continues to rely on an inherently inaccurate metering system. Staff witness Hanson stated: "Staff prefers that the parties devise a method to more accurately measure the power usage of a collocation arrangement than to simply bump up the present metered amount by some factor." Staff Ex. 2.1P at 2. AT&T Illinois has demonstrated, and no party has seriously disputed, that the current metering system does not accurately measure power that is actually used by a given CLEC. Qwest's approach of applying a simple band-aid "patch" to the very complex problems that have been identified reflects an overly simplistic and ultimately erroneous approach to resolving these issues.

Second, as both the Telcordia Technologies study and Ms. Muellner demonstrated, the extent of leakage varies from CLEC to CLEC and from collocation site to collocation site. AT&T Ill. Ex. 5.1 at 29; AT&T Ill. Ex. 4.0 at 12-13. Qwest's proposal is completely unworkable because a percentage adjustment to the power costs would fail to account for a particular CLEC's specific collocation site and the leakage associated at that site. If a single percentage adjustment were used, some CLECs would be overbilled and some would be underbilled, relative to their actual usage as compared to the actual leakage experienced. AT&T

Ill. Ex. 5.1 at 29. Mr. Hanson made a similar point in his testimony: "I would note that an examination of the Telcordia study indicates that making an adjustment of this nature would result in most collocation arrangements paying more for usage than actual." Staff Ex. 2.1P at 2 (citing to AT&T Ill. Ex. 3.0 – Schedule MN-6 at 22-23).

Another problem with Qwest's proposal is that a 15% adjustment would be completely inadequate to ensure that AT&T Illinois recovers its costs. AT&T Illinois' evidence shows that overall leakage ranges between 30% and 50%. Ms. Muellner testified that, on weighted average basis, leakage is more than 47%, QCC Ex. 9.0 (AT&T Ill. Resp. to Qwest DR 2.19), so the adjustment would have to be 47% to appropriately compensate AT&T Illinois. But even this might be too low and would still fail to account for the specific leakage at a site. AT&T Ill. Ex. 5.1 at 29-30.

In sum, Qwest's crudely drawn solution will not solve the complex problems identified by AT&T Illinois in a comprehensive and fair manner. Qwest's proposal cannot be seriously considered, especially when AT&T Illinois has provided a more practical, efficient and fair alternative. For these reasons, any proposal to apply a readjustment factors should be rejected.

VI. CONCLUSION

For all of the foregoing reasons, and for the reasons set forth in AT&T Illinois' testimony, the Commission should find that the AT&T Illinois "per amp" proposal is the most fair, accurate, cost-effective and non-disruptive way to bill for DC power used by CLECs. Accordingly, the Commission should approve the tariff filing made by AT&T Illinois, as revised in Schedule RAS-14 to AT&T Illinois Exhibit 5.2.

Respectfully submitted,

ILLINOIS BELL TELEPHONE COMPANY

_____

One of Its Attorneys

Mark R. Ortlieb
John J. Reidy III
AT&T Illinois
225 West Randolph Street
Floor 25D
Chicago, IL 60606
(312) 727-2415
(312) 727-1216

CERTIFICATE OF SERVICE

I, Mark R. Ortlieb, an attorney, certify that a copy of the foregoing **INITIAL BRIEF OF AT&T ILLINOIS** was served on the parties on the attached service list by U.S. Mail and/or electronic transmission on May 2, 2006.

_____

Mark R. Ortlieb

SERVICE LIST FOR ICC DOCKET NO. 05-0675

Gilbert, David
Administrative Law Judge
160 N. LaSalle
Suite C-800
Chicago, IL 60601
dgilbert@icc.illinois.gov

Marilyn H. Ash
Mpower Communications, Corp.
Corporate Crossing
175 Suly's Trail, Ste. 300
Pittsford, NY 14534
mash@mpowercom.com

Lael Atkinson
Paralegal
Covad Communications Company
100 Congress Ave., Ste. 2000
Austin, TX 78701
latkinso@covad.com

Brandy Bush Brown
Office of General Counsel
Illinois Commerce Commission
160 N. LaSalle, Ste. C-800
Chicago, IL 60601
bbrown@icc.illinois.gov

Lorilei Christner
McLeodUSA Telecommunications Services, Inc.
PO Box 3177
6400 C St., SW
Cedar Rapids, IA 52406-3177
lchristner@mcleodusa.com

Joseph E. Donovan
Atty. for Intervenors
Kelley Drye & Warren LLP
333 W. Wacker Dr., Ste. 2600
Chicago, IL 60606
jdonovan@kelleydrye.com

William A. Haas
McLeodUSA Telecommunications Services, Inc.
6400 C St., S.W.
Cedar Rapids, IA 52404
whaas@mcleodusa.com

Henry T. Kelly
Atty. for Intervenors
Kelley Drye & Warren LLP
333 W. Wacker Dr., Ste. 2600
Chicago, IL 60606
hkelly@kelleydrye.com

Michael J. Lannon
Office of General Counsel
Illinois Commerce Commission
160 N. LaSalle, Suite C-800
Chicago, IL 60601
mlannon@icc.illinois.gov

Owen E. MacBride
Atty. for McLeodUSA Telecommunications Services, Inc.
Schiff Hardin & Waite
6600 Sears Tower
Chicago, IL 60606
omacbride@schiffhardin.com

Stephen J. Moore
Atty. for Intervenors
Rowland & Moore LLP
200 W. Superior St., Ste. 400
Chicago, IL 60610
steve@telecomreg.com

Katherine K. Mudge
Senior Counsel
Covad Communications Company
7000 North Mopac Expressway - 2nd Floor
Austin, TX 78731
katherine.mudge@covad.com

Julie Musselman
Telecommunications Policy Analyst
Kelley Drye & Warren LLP
333 W. Wacker Dr.
Chicago, IL 60606
jmusselman@kelleydrye.com

Samantha C. Norris
Atty. for McLeodUSA Telecommunications Services, Inc.
Schiff Hardin & Waite
6600 Sears Tower
Chicago, IL 60606
snorris@schiffhardin.com

Mark Ortlieb
Illinois Bell Telephone Company
225 W. Randolph, 25D
Chicago, IL 60606
mo2753@sbc.com

John J. Reidy III
Illinois Bell Telephone Company
225 West Randolph, Floor 25D
Chicago, Illinois 60606
jr2724@att.com

Mary Pat Regan
Vice President - Regulatory
Illinois Bell Telephone Company
555 Cook St., Fl. 1E
Springfield, IL 62721
mr1296@sbc.com

Kevin D. Rhoda
Atty. for Intervenors
Rowland & Moore LLP
200 W. Superior St., Ste. 400
Chicago, IL 60610
krhoda@telecomreg.com

Cathy A. Robertus
Paralegal
Qwest Services Corporation
1801 California St., 10th Fl.
Denver, CO 80202-2658
cathy.robertus@qwest.com

Greg Rogers
Level 3 Communications, L.L.C.
1025 Eldorado Blvd.
Broomfield, CO 80021
greg.rogers@level3.com

Thomas Rowland
Atty. for Intervenors
Rowland & Moore LLP
200 W. Superior St., Ste. 400
Chicago, IL 60610
tom@telecomreg.com

Adam L. Sherr, Esq.
Corporate Counsel
Qwest Communications Corporation
1600 7th Ave., Rm. 3206
Seattle, WA 98191
adam.sherr@qwest.com

Kathy Stewart
Illinois Commerce Commission
527 East Capitol Avenue
Springfield, IL 62701
kstewart@icc.illinois.gov

Gregg Strumberger
Level 3 Communications, L.L.C.
1025 Eldorado Blvd.
Broomfield, CO 80021
gregg.strumberger@level3.com

Jeffrey P. Wirtzfeld
Public Policy Staff Advocate
Qwest Communications Corporation
1801 California St., Ste. 4710
Denver, CO 80202-2658
jeff.wirtzfeld@qwest.com