BEFORE THE ILLINOIS COMMERCE COMMISSION

Docket No. 05-0675

Direct Testimony of Jeanne Muellner
On Behalf of AT&T Illinois

AT&T Illinois Exhibit 4.0

TABLE OF CONTENTS

I. INTRODUCTION.....1

II. PURPOSE OF TESTIMONY.....2

III. VIRTUAL CENTRAL OFFICE POWER TOUR.....2

IV. POWER LEAKAGE 2

V. OTHER PROBLEMS WITH POWER METERING.....15

VI. CONCLUSION 17

ATTACHMENTS

I. SCHEDULE JM-1 ……..…… VIRTUAL CENTRAL OFFICE POWER TOUR

II. SCHEDULE JM-2 …….…… COLLOCATOR FRAME GROUND CURRENTS

III. SCHEDULE JM-3 …….….. COLLOCATOR GROUND, BATTERY AND RETURN CURRENTS

DIRECT TESTIMONY OF JEANNE MUELLNER

ON BEHALF OF SBC ILLINOIS

I. INTRODUCTION

Q. PLEASE STATE YOUR NAME AND BUSINESS ADDRESS.

A. Jeanne M. Muellner. My business address is 65 W. Webster Street, Joliet, Illinois 60432.

Q. BY WHOM ARE YOU EMPLOYED AND IN WHAT CAPACITY?

A. I am employed by Illinois Bell Telephone Company ("Illinois Bell" also referred to as "Ameritech Illinois", "SBC Illinois", or "AT&T Illinois"). My title is Manager – Engineering Implementation – Power, commonly referred to as "Power Engineer".

Q. PLEASE DESCRIBE YOUR EDUCATION AND OCCUPATIONAL BACKGROUND

A. I received a Bachelor of Science in Electrical Engineering from the University of Illinois at Chicago in December 1988. I have been employed as an SBC Power Engineer since June 2000. Prior to joining Power Engineering, I was an Electrical Engineer for ASC Services Company, LLC, in Chicago. This firm was the Ameritech Corporate Real Estate Design & Construction alliance partner. Preceding that employment, I held Electrical Engineer positions for the engineering design firms of Primera Engineers in Chicago and Cybernet Systems Management in Schaumburg, Illinois. Prior to those positions, I began my professional career in 1989 as a Technical Staff Engineer at Commonwealth Edison's LaSalle County Nuclear Station in Marseilles, Illinois.

II. PURPOSE OF TESTIMONY

Q. WHAT IS THE PURPOSE OF YOUR TESTIMONY?

A. My testimony demonstrates that return shunt monitoring currently used by SBC Illinois does not allow for all direct current ("DC") electricity actually used by a competitive local exchange carrier ("CLEC") to be accurately measured (and therefore accurately billed) by SBC Illinois.

III. VIRTUAL CENTRAL OFFICE POWER TOUR

Q. PLEASE EXPLAIN SCHEDULE JM-1.

A. Schedule JM-1 is a virtual central office tour in Power Point format that I put together to help familiarize the Commission and the parties with the basic components of SBC Illinois's central office power infrastructure. The tour is self explanatory and I will not describe it further other than to say that it explains what happens to electric power from the time it enters SBC Illinois' central office to the time it is delivered to the CLEC collocation arrangement. It also shows the power metering arrangement instituted by SBC Illinois.

IV. POWER LEAKAGE

Q. HOW DO YOU DEFINE THE TERM "LEAKAGE"?

A. For a DC-powered telephone equipment bay to operate, electric current must flow from the power source through the battery conductors, to the load (i.e. the CLEC equipment bay in the collocation space) and must return to the battery through the return conductors. Ideally all electric current flowing into the load via the battery conductors will flow from the load via the return conductors. This is illustrated in Figure 1 below.

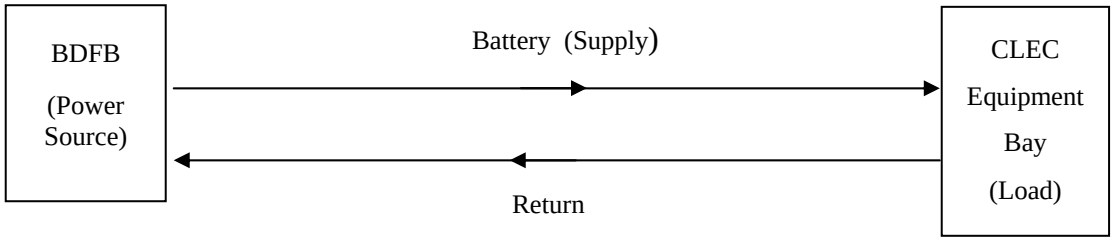

Figure 1: Normal Battery and Return Current Paths for Equipment Bay

"Leakage" is defined as the general quantity of electric current, as measured in the unit of amperes ("amps"), that does not flow into the return conductors of the specific circuit, but instead flows into ground conductors and/or into grounded metallic objects, such as threaded rods that support cable racks. Leakage occurs due to internal bonding of return bus bars or return terminals of various telephone equipment bays to the frame ground conductor of that bay. This connection allows current to "leak" out of the normal return path for the circuit and on to the central office grounding system.

Telcordia Technologies and SBC Illinois have found through on-site measurements that leakage is occurring in the power supplied to CLEC collocation arrangements inside SBC Illinois central offices. These measurements show that some of the return current flows to the central office grounding system instead of flowing back to the batteries via the return conductors. Therefore this electricity is not measured by power metering units that measure electric current in the return side of the circuit. The telephone equipment bay still operates in this situation; therefore the return current is flowing back to the point of primary power distribution – the DC power plant. Return current will flow through the telephone equipment bay's frame grounding conductor, to a larger ground "collection" cable and on to even larger ground cables known as vertical risers and horizontal

equalizers until the return current makes it back to the power plant via the plant's grounding conductor. This is illustrated in Figure 2 below.

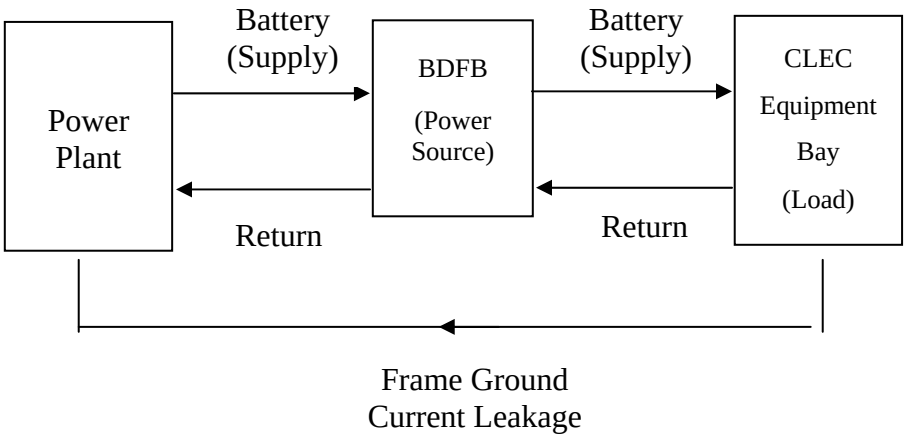

Figure 2: Frame Ground Current Leakage from CLEC Equipment Bay to Power Plant

Q. HAVE YOU MEASURED LEAKAGE IN CLEC COLLOCATION ARRANGEMENTS IN VARIOUS SBC ILLINOIS CENTRAL OFFICES?

A. Yes. I supervised the measurement of leakage current for 12 CLEC installations in 4 SBC-Illinois central offices.

Q. WHERE DID YOU TAKE THOSE MEASUREMENTS?

A. I supervised the leakage measurements at SBC Illinois' Franklin, Lombard Main, Joliet Main, and Illinois Dearborn central offices.

Q. WHEN DID YOU TAKE THOSE MEASUREMENTS?

A. I supervised the measurements in the Franklin office in February 2005. I supervised the measurements in the remaining offices in May and June 2005.

Q. PLEASE EXPLAIN HOW YOU PERFORMED THOSE MEASUEMENTS?

A. For the selected CLECs at each office I recorded four measurements. Each measurement was taken twice using different meters to verify accuracy of the value. The four measurements are explained below. Refer to Figure 3 below for the general connections of a CLEC's equipment bay to the bay's power source and to the power metering unit.

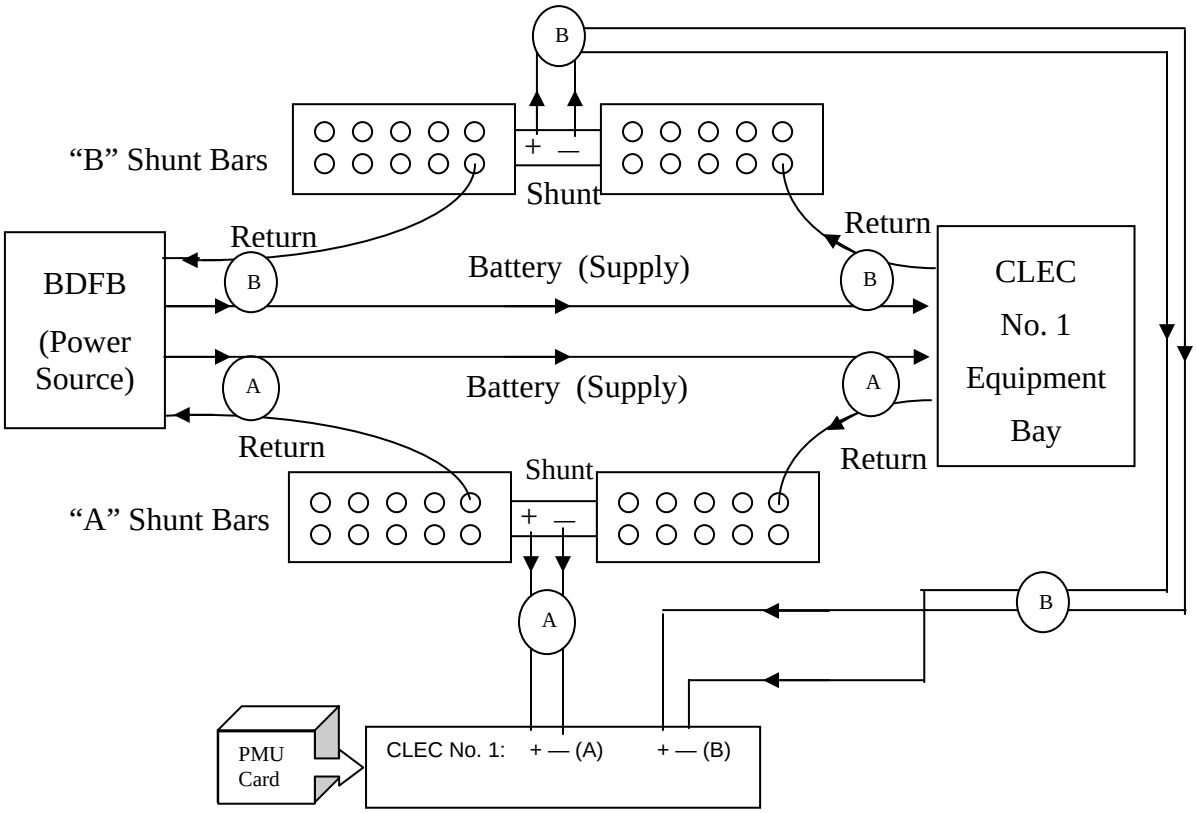

Figure 3: General Connection Diagram of CLEC Equipment Bay to Power Source and to Power Metering Unit

1. Frame Ground Current

Frame ground current is the current flowing on the ground conductors connected to the equipment frames. The frame ground current provides an idea of how much, if any, leakage current exists. Frame ground current was measured at the CLECs' frame ground "collection" cables with a clamp-on ammeter. The frame ground collection cable is a larger ground cable that "collects" the frame ground currents of individual smaller ground cables connected to each of the equipment frames in an equipment arrangement. The collection ground cable is typically size #1/0 (pronounced "number one ott") American Wire Gauge ("AWG"). In some cases, due to other currents flowing in the #1/0 frame ground cable, currents flowing in the individual frame ground conductors were measured and summed to obtain the total frame ground current. The individual frame ground conductors are typically size #6 AWG. Refer to Figure 4 below for frame ground connections to equipment bays. The ground wires are green-colored.

Figure 4: #1/0 AWG Frame Ground Collection Cable with Individual #6 AWG Frame Ground Conductors to Equipment Bays

The measurement of the frame ground currents at the Franklin Central Office are listed in Schedule JM-2 ("Collocator Frame Ground Currents"). Frame ground currents at the other selected central offices are listed in Schedule JM-3 ("Collocator Frame Ground, Battery and Return Currents").

2. Battery Current

Battery current is the actual current used by the CLEC's collocated equipment in the equipment bays. I supervised the measurement of battery current with a clamp-on ammeter at the specific fuses of the battery distribution fuse bay ("BDFB") identified as feeding the particular CLECs' equipment bays. The BDFB is the source of power that is provided to the collocation arrangement, so this measurement shows how much power SBC Illinois is actually providing to that location. Refer to Figure 5 for a front view of a BDFB.

Figure 5: BDFB – Front View

3. Return Current at the Shunts

Return current is the current that flows from the load (i.e. equipment bay) back to the battery source. Return current was calculated from voltage readings across the shunts at the CLECs' "shunt bars". A shunt is a calibrated resistive copper assembly that connects two points of a circuit. The shunt bars are exposed overhead copper bars separated by a shunt on which the CLECs' return cables terminate in a series arrangement to allow a shunt to monitor multiple return currents. There are separate levels of bars with shunts for the "A" loads and for the "B" loads. The return cables from the CLEC equipment bay terminate at one end of the shunt bars ("customer side"), and the return cables to the SBC Illinois power distribution bay terminate at the other end of the shunt bars ("power source side"). The two bars are connected by a 50 mV/200A shunt. Refer to Figures 6 and 7 below for the shunt bar assembly and the shunt itself. The voltage readings are in the millivolt (mV) range and are measured with a multimeter set to the mV range. A linear relationship exists between the shunt rating and the mV reading. An algebraic equation is used to calculate the current value (in amps) from the measured mV reading. A reading at the shunt shows how much electric current is returning to the power source.

Figure 6: CLEC Shunt Bar Assembly

Figure 7: Shunt on CLEC Shunt Bar Assembly

4. <u>Return Currents at the Power Metering Unit ("PMU")</u>

Return current was also calculated from the voltage readings at the associated "power metering unit" ("PMU"). A PMU is a rack-mounted panel that monitors electrical power (kilowatts) and computes the value of power consumption over time (kilowatt-hours).

Here too, the voltage readings are in the mV range and are measured with a multimeter set to the mV unit. The readings at the PMU generally match that at the shunt bars, as the shunt leads are wired directly from the shunts to the PMU. Refer to Figures 8 and 9 for front and rear views of a PMU.

Figure 8: Power Metering Unit – Front View

Figure 9: Power Meter Unit – Enlarged Rear View Showing Shunt Lead Terminations

Q. HOW ARE ALL THESE MEASUREMENTS USED TO CALCULATE CURRENT?

A. By comparing the battery current to the return current, we can determine how much return current is not being measured on the return side and is therefore "lost" (i.e., not accounted for in the billing process to CLECs). The amount of unmeasured current is the difference between the battery current at the BDFB and the return current at the PMU. This current imbalance is shown in units of amps and in a percentage in Schedule JM-3.

Q. HOW DID YOU SELECT THE COLLOCATION ARRANGEMENTS AT WHICH YOU PERFORMED THESE MEASUREMENTS?

A. In general, I selected medium-to-large central offices with several CLECs, both caged and cageless.

The Franklin office was initially chosen because Telcordia Technologies completed an extensive study of CLEC frame ground currents there in August 2002, as documented in their November 2002 report titled "Frame Ground Currents at SBC Collocated Equipment". This report is attached to Mr. Nevel's testimony.

In the central offices selected, I supervised the measurements on CLECs with several fuses (four or more for each load), as well as those with only one or two fuses per load.

My measurements provide an additional factual basis for the Commission to conclude that the leakage problem exists in the SBC Illinois power network and to quantify the

extent of that leakage. It is not necessary to measure every SBC Illinois central office to do this.

Q. WHAT WERE THE RESULTS OF THE MEASUREMENTS YOU PERFORMED?

A. The results are contained in Schedule JM-2 ("Collocator Frame Ground Currents"), which documents the measured frame ground currents at the Franklin Central Office, and in Schedule JM-3 ("Collocator Frame Ground, Battery and Return Currents"), which documents the measured currents for CLECs at four different central offices. The results of my study show that frame ground currents are present in CLEC frame ground cables. In addition, for several CLECs, the amount of return current is significantly less than that of the battery current.

In Schedule JM-3, there are documented situations in which the return current is actually slightly higher than the battery current for a particular CLEC. This is a condition that Telcordia's November 2002 report addresses. Per the Telcordia report, current can enter the equipment's return conductor and leave on the frame ground conductor. Therefore, the PMUs at the heart of the power metering architecture cannot always measure the actual current usage.

Q. WHAT CONCLUSIONS DO YOU DRAW FROM THESE RESULTS?

A. Leakage current is present on several CLEC frame ground conductors. Return current was in the range of 0% - 90% of the battery current, averaging 38%. This indicates that on average, 38% of battery current used is not measured by the PMUs. This percentage

is the same when all 12 measured CLECs are considered, including the two that show negative leakage values, as it is when just the 10 measured CLECs with positive leakage values are considered. This means that the two instances of negative leakage I detected do not change my conclusion that power metering results in significant under-measurement of power provided to CLECs.

Q. DO YOU HAVE ANY REASON TO BELIEVE THAT THE RESULTS WOULD BE ANY DIFFERENT AT COLLOCATION ARRANGEMENTS IN OTHER SBC ILLINOIS CENTRAL OFFICES?

A. No. As I discussed above, there is no reason why the results found at the four central offices would differ at other SBC Illinois central offices. All of the SBC Illinois central offices utilize the same architecture for measuring CLEC power usage, i.e., the same return shunt bars and the same power metering units.

Q. ARE YOU FAMILIAR WITH THE TELCORDIA STUDY THAT MR. NEVELS DISCUSSES?

A. Yes. I have read the November 2002 Telcordia study titled “Frame Ground Currents at SBC Collocated Equipment”.

Q. ARE YOU FAMILIAR WITH THE MANNER IN WHICH LEAKAGE WAS MEASURED IN THE TELCORDIA STUDY?

A. Yes.

Q. DID YOU MEASURE LEAKAGE IN ROUGHLY THE SAME WAY THE TELCORDIA STUDY DID FOR FRAME GROUND CURRENTS AND FOR BATTERY CURRENTS?

A. Yes. For the return current, I used two methods. The documented return currents were calculated from measuring the mV reading at the collocators' shunt bars and at the PMUs themselves. The method of calculating return current based on the shunt mV reading was chosen because it is that current that is read at the point of metering, the PMU.

I also measured return current at the shunt bars with a clamp-on ammeter. These readings are not documented, but were used in the field to verify the accuracy of the shunt mV readings. These readings were consistent with the calculated values obtained from the shunt and PMU mV readings.

Q. ARE THE RESULTS OF YOUR MEASUREMENTS CONSISTENT WITH THE LEAKAGE RESULTS IN THE TELCORDIA STUDY?

A. Yes. The frame ground currents that SBC Illinois measured at the Franklin Central Office were close in value to those measured by Telcordia. The values are documented in Schedule JM-2 ("Collocator Frame Ground Currents").

Q. HOW DO YOU ACCOUNT FOR ANY DISCREPANCIES?

A. Slight differences in meter accuracy, changes in collocator loads and differences in the point of measurement account for discrepancies. In some cases, the collocator may have removed equipment since the original study was performed. In a few cases, the collocator was no longer present.

Q. IN SUMMARY, WHAT IS YOUR CONCLUSION REGARDING POWER LEAKAGE IN CLEC COLLOCATION ARRANGMENTS?

A. Leakage current is present in CLEC collocation arrangements. The leakage ranged as high as 90% and averaged 38%.

V. <u>OTHER PROBLEMS WITH POWER METERING</u>

Q. ARE THERE OTHER PROBLEMS WITH POWER METERING?

A. Yes. Since power metering requires SBC Illinois to install exposed shunt bars in the live circuit, there is always the potential for equipment damage, loss of service and personnel injury should those shunt bars be short-circuited. Power metering also requires SBC Illinois to procure, install and maintain special equipment that can measure and record the CLEC's power usage. This includes PMUs and the wiring that connects the PMUs to the shunts.

Q. WHAT ARE PMUs?

A. A power metering unit is rack-mounted panel that measures electrical power consumption over time. Pictures of a PMU are included in Figures 8 and9. Any metering proposal that utilizes shunts requires SBC Illinois to use PMUs.

Q. HAS SBC ILLINOIS EXPERIENCED PROBLEMS WITH PMUs?

A. Yes. In 2004, there were trouble reports on 53 PMUs. Of the 215 PMUs installed in SBC Illinois central offices as of May 2005, 24 required replacement of the CPU circuit card in 2004 due to failure. The manufacturer, Emerson Network Power, formerly

Marconi, issued a Product Change Notice ("PCN") on January 31, 2005. This PCN documented a "higher than expected failure rate" of the CPU converter. The product change was for the replacement of the CPU circuit card. SBC's Power Maintenance Department replaced the defective cards with new ones exchanged for the old ones by Emerson.

In addition, 91 PMUs have gone out of service at some time since their installation. Since 2003, one PMU goes out of service about every six weeks due to a failed modem circuit card or failed CPU circuit card. The service outage lasts until the circuit card can be replaced, which typically takes approximately 2 to 3 days.

Q. WHAT IS SUPPLY-SIDE METERING?

A. While it's not a good idea, metering could be done on the supply (battery) side of the collocators' conductors, rather than on the return side. This is called supply-side metering.

Q. WHAT PROBLEMS WOULD SUPPLY-SIDE METERING CREATE FOR SBC ILLINOIS?

A. It would create even greater problems with personnel safety, service to the CLEC customers and efficient space utilization. Any supply-side metering proposal that utilizes an arrangement similar to the presently-used shunt bars would require a separate shunt for each fused circuit. Several sets of shunts and shunt bars would be needed for each collocator, depending on the quantity of circuits. For example, if a collocator has three separate pairs of fused circuits, there would be six exposed shunts and six exposed shunt

bars near the collocation arrangement. In contrast, return-side metering allows for a single shunt. The design of the shunt bars allows ten return circuits to be connected to one bar.

The additional shunts and shunt bars needed for supply-side metering require considerable overhead space, often in congested areas, and would further contribute to overhead congestion. More importantly, there is greater potential for equipment damage, loss of service and personnel injury should battery bars be short-circuited.

Q. ARE THERE OTHER PROBLEMS WITH SUPPLY-SIDE METERING?

A. Each supply-side shunt (and many more of them are required on the supply side) requires a separate pair of leads to a Power Metering Unit ("PMU"). Since each PMU can only accommodate a certain number of leads from the shunts, this in, turn greatly increases the PMUs needed to measure the power consumed by CLECs. For example, a PMU typically can accommodate 19 pairs of shunt leads. If the number of shunts doubles or triples, then the number of leads from those shunts also doubles or triples, and the number of PMUs needed to record measurements from those leads inevitably increases.

VI. <u>CONCLUSION</u>

Q. DOES THIS CONCLUDE YOUR DIRECT TESTIMONY?

A. Yes.