AmerenIP Exhibit 1.14

MISO G495 Generator Interconnection Study
Prairie State Energy Center, Washington County, IL

SYSTEM IMPACT STUDY REPORT
(Thermal, Stability, & Short Circuit)

(Deliverability study report is attached separately)

January, 2006

MISO LGIP Queue # 38393-01

Prepared by Ameren Services, acting as a consultant for the Midwest ISO

Disclaimer

The information, conclusions, analyses, studies and recommendations (hereinafter referred to as "Information") contained herein have been prepared by Ameren Services Company (hereinafter “Ameren”) for and on behalf of the owner(s) of the transmission and/or distribution assets evaluated herein which may include one or more of the following affiliate companies of Ameren: Illinois Power Company, d/b/a AmerenIP, Union Electric Company, d/b/a AmerenUE, Central Illinois Light Company, d/b/a AmerenCILCO, or Central Illinois Public Service Company, d/b/a AmerenCIPS (hereinafter “Ameren Affiliates”). The Information was developed, in part, based upon information which has not been independently verified or confirmed by Ameren. Although Ameren has made all commercially reasonable efforts to develop the Information in an accurate manner consistent with the exercise of Good Utility Practice, the user of such Information accepts all risk and liability for the use thereof and agrees to indemnify and hold Ameren and the Ameren Affiliates harmless from any subsequent action related to such use. NO GUARANTEES OR WARRANTIES OF ANY KIND, INCLUDING EXPRESS OR IMPLIED WARRANTIES OF MERCHANTABILITY OR FITNESS ARE MADE WITH RESPECT TO THE INFORMATION BY AMEREN, ITS AFFILIATES, ITS OFFICERS, DIRECTORS, EMPLOYEES OR AGENTS, WHO ALSO ASSUME NO LEGAL RESPONSIBILITY FOR THE ACCURACY OF THE INFORMATION CONTAINED HEREIN. IN ADDITION, NO LIABILITY IS ASSUMED AND ALL LIABILITY IS EXPRESSLY DISCLAIMED FOR NEGLIGENCE OR DAMAGES OF ANY KIND, ANY DECISIONS, CONTRACTS, COMMITMENTS, OBLIGATIONS OR ANY OTHER ACTIONS UNDERTAKEN OR MADE ON THE BASIS OF THE INFORMATION CONTAINED HEREIN.

EXECUTIVE SUMMARY

This report summarizes the thermal, stability, and short circuit analysis conducted by Ameren Services as a consultant for the Midwest ISO LGIP queue # 38393-01 (G495). A separate study was conducted by Midwest ISO for the deliverability of G495. The full report of the deliverability study is posted on the Midwest ISO extranet along with this report. A new impact study will be conducted by Midwest ISO to identify mitigations for the constraints identified in the deliverability study. In addition, a study to investigate the effects of GSU inrush currents of this project is also in progress at the moment. The System Impact Study of G495 will be completed upon completion of those two studies; study to mitigate the deliverability constraint and the study of the impacts of GSU inrush currents.

Prior to this, Midwest ISO conducted a separate study to investigate the impacts of the Prairie State Energy Center on the Southern Illinois Power Cooperative (SIPC) system, which included the impacts due to this request's incremental 150 MW capacity addition. The report of the study is posted at the following location of Midwest ISO extranet: http://www.midwestiso.org/plan_inter/documents/generation_inter/X5_SIS_SIPC-IP14_Final.pdf

The G495 project proposes to add an additional 150 net MW (a total of 1650 net MW) of generating capability at the proposed Prairie State Energy Center project in Washington County, IL. An Ad Hoc Study Group was assembled with members from MISO, Ameren, Cinergy, CWLP, SIPC and TVA. The Ad Hoc Study Group reviewed and approved the assumptions and results for this project. The MISO LGIP queue lists an expected in-service date for this project of 10/01/2008.

Thermal Results

Initially, Illinois Power studied the impact of the Prairie State plant output at 1500 MW. A Baldwin to Rush Island 345 kV line along with major upgrades at the Baldwin Substation was recommended based on the original analysis. A subsequent joint study between IP and Ameren modified the Prairie State outlet configuration. The Prairie State plant will interconnect to the transmission system by tapping the Baldwin to Stallings and Baldwin to Mt Vernon 345 kV lines via an in-and-out arrangement.

The power flow analysis focused on thermal loadings under both normal and contingency conditions. In addition, a comparison of the bus voltages before and after the addition of the incremental generation was made. While thermal loadings above the emergency rating for several facilities in the study areas increased due to the incremental generation, the distribution factors for these facilities as related to the output of the G495 project were below the MISO recommended cutoff of 5 percent. Therefore no upgrades have been attributed to G495.

The proposed project was also evaluated for the Ameren planning criteria tests. Two limiting Ameren facilities with the appropriate response factors were identified. One facility was

found limiting for a line and generator outage and the other facility was found limiting for the Ameren import test. These conditions were deemed to be pre-existing and thus were not attributed to the G495 project.

Stability Results

This section of the report presents the results of the stability study of machines at Prairie State Energy Center (PSEC). The generation level studied here is 1650 MW, which represents two MISO requests IP14 (1500 MW) and G495 (150 MW). The stability study for IP14 was completed in 2003. However, the machine parameters have been changed since completion of that study, so this study covers both a total of 1650 MW and new parameters.

Based on the PSEC configuration, dynamic models and their data parameters, there is no appreciable degradation of transient stability due to IP14 plus G495. However, to maintain stability of the Dynegy Baldwin Units, for two of the studied scenarios, backup clearing time reduction, if can be implemented reliably, is required. The System Protection group at Ameren has indicated that the required critical clearing time can be achieved by replacing the relays at Baldwin switchyard. Also, the local modes of PSEC machines were found to be poorly damped for some of the scenarios studied. These scenarios include fault conditions at Prairie State 345 kV bus. The poorly damped responses of machines at PSEC require correction.

Use of modern DeltaP/Omega power system stabilizers (PSS) on the excitation systems of the Prairie State machines showed improvement in the simulation results and must be implemented. Prior to installing PSS, excitation system testing must be performed to verify excitation system models and their parameters. The PSS model parameters used in this study, however, were not necessarily intended to be optimal, and they are not, but good enough for the purpose of this PSS feasibility study. Developing optimized tunable parameters for the specific PSS application are beyond the scope of this particular study.

The damping of Dynegy Baldwin Units 1, 2, and 3, for the scenarios studied, is deemed acceptable based on the field tested data provided by Dynegy. The damping of AmerenUE Rush Island Units 1 and 2 for the scenarios studied is found to be in acceptable range. However, the damping of Rush Island Unit 3 (MISO AM08 project) is found to be poorly damped for conditions resulting in outage of two outlet lines at Rush Island. The Rush Island Unit 3 is a proposed unit with in-service date of 2009. The manufacturer supplied typical excitation system parameters of this unit were used in the study. Ameren requires that the excitation system of this unit be tested to get proper modeling information. At that time, the need for the power system stabilizer on Rush Island Unit 3 should be reassessed to confirm the impact of G495.

The results of the simulations performed for scenarios submitted by the Ad Hoc group indicate no appreciable degradation of transient stability due to IP14 plus G495.

Peabody Energy should verify that out-of-step protection is incorporated in their generation protection schemes. There may be conditions other than those studied here that could impact the stability of the PSEC plant.

Short Circuit Results

This section of the report presents results of the short circuit assessment of Peabody Energy (PE) Prairie State Energy Center (PSEC) connection of proposed 2110 MVA generation (2-1055 MVA generators) at the new Prairie State 345 kV station in Washington County, IL.

As the MISO project G495 is an upgrade to the proposed generation addition project MISO IP14 and the generator and GSU transformer data for IP14 project changed since the study was last performed, a short circuit assessment was performed to verify IP14 results. The assessment indicated that that in addition to two Labadie 345 kV breakers (7H and 17H) that were identified as overstressed in the IP14 study performed by Ameren in 2003, two other Labadie 345 kV breakers (11H and 23H) were found to be overstressed because of IP14/G495 project. This change can be attributed to the change in the machine as well as the GSU transformer data for project IP14/G495. The Labadie 345 kV breakers (11H and 23H) have been identified as being overstressed with the MISO AM08 project, which is ahead of G495 in MISO queue but behind IP14. These breakers were now found to be overstressed with MISO IP14 prior to MISO AM08. The addition of MISO project AM08 would result in overstress of two Rush Island 345 kV circuit breakers and two Labadie 345 kV circuit breakers. A total of six Labadie 345 kV breakers and two Rush Island 345 kV breakers have to be replaced prior to MISO project G495 synchronization. Without MISO AM08, a total of four Labadie 345 kV breakers have to be replaced prior to MISO G495 synchronization.

The fault current levels without any voltage or AC/DC adjustments at the generator terminals of G495 project for three phase and single phase faults would be about 226 kA and 228 kA, respectively. These values are provided for information purposes only.

MISO should work with other transmission provider(s) in the area to determine the impact of this generation connection on those systems from a short-circuit perspective as we as we do not have information regarding the interrupting capabilities and replacement criteria for the neighboring transmission provider (s) circuit breakers.

This study has been performed with the best presently available information that Ameren has been given by Midwest ISO. Should the models not reflect the functionality of the actual equipment and controls, and/or their parameters not reflect actual control settings, the results of such studies may not be meaningful and the study may have to be re-performed.

Deliverability Results

Studies conducted by Midwest ISO for the deliverability (network resource status) of the Prairie State Energy Center (PSEC) have shown that only 1500 MW of PSEC is deliverable.

The remaining 150 MW of PSEC is not deliverable due to the constraint of the 345 kV transmission line from Newton to Casey in the Ameren control area. Midwest ISO is conducting a separate study to identify mitigations to eliminate this constraint and the results of this study will be a future addendum to this report. The full report of the deliverability study is posted on the Midwest ISO extranet along with this report and also posted separately at the following location:
http://www.midwestmarket.org/publish/Document/2220c2_108155d446d_-70700a48324a

GSU Inrush Current Study

The interconnection substation configuration filed with the Interconnection Agreement of the 1500 MW request of the Prairie State Energy Center (MISO queue # 37089-01) indicates that the generator step up (GSU) transformers are energized from the high voltage grid. Due to the concern that large inrush currents drawn from the grid during the energizing of the PSEC GSUs may cause transient and harmonic problems on other nearby facilities, MISO is conducting a separate GSU Inrush Study for PSEC interconnection request. The report of this study once completed will also be an addendum to this System Impact Study report.

CONTENTS

This report on MISO LGIP Queue # 38393-01 (G495) is composed of three sections; the thermal report, the stability report, and the short circuit report. Each section was originally created as a stand alone document. As a result the figure and appendix numbers within each section only pertain to that section. The information has been combined into a single report in order to provide completeness and ease of reference.

1. **Thermal report** **page 8**
2. **Stability report** **page 28**
3. **Short circuit report** **page 45**

MISO G495 Generator Interconnection Study
Prairie State Energy Center, Washington County, IL

SYSTEM IMPACT STUDY REPORT
(Thermal Power Flow)

January, 2006

MISO LGIP Queue # 38393-01

Prepared by Ameren Services, acting as a consultant for the Midwest ISO

TABLE OF CONTENTS

I. Summary	**Page 10**
II. Study Methodology and Assumptions	**Page 11**
A. Basecase Development	**Page 11**
B. Monitored Elements	**Page 13**
C. Contingencies	**Page 13**
III. Results	**Page 14**
A. System Performance Under Normal Conditions	**Page 14**
B. System Performance Under Single Transmission Contingency Conditions	**Page 15**
C. System Performance Under Ameren Generator Outage Conditions	**Page 20**
D. Impact of Selected Double Contingencies	**Page 20**
E. System Performance Under Single Transmission Contingency Conditions with any Single Ameren or Nearby Generator Out of Service	**Page 22**
F. Ameren Non-Simultaneous and Simultaneous Import Capability	**Page 22**
G. Ameren Non-Simultaneous and Simultaneous Export Capability	**Page 23**
H. Voltage Comparison	**Page 23**
IV. Facility Impacts and Upgrades	**Page 24**
V. Conclusion	**Page 25**
Appendix A	**Page 26**

I. Summary

This report summarizes the power flow analysis conducted by Ameren Services as a consultant for the Midwest ISO LGIP queue # 38393-01 (G495). The G495 project proposes to add an additional 150 net MW (a total of 1650 net MW) of generating capability at the proposed Prairie State project in Washington County, IL. Initially, Illinois Power studied the impact of the Prairie State plant output at 1500 MW. A Baldwin to Rush Island 345 kV line along with major upgrades at the Baldwin Substation was recommended based on the original analysis. A subsequent joint study between IP and Ameren modified the Prairie State outlet configuration. The Prairie State plant will interconnect to the transmission system by tapping the Baldwin to Stallings and Baldwin to Mt Vernon 345 kV lines via an in-and-out arrangement.

The present study will evaluate the impact of the proposed incremental generation on the reliability of the Ameren and adjacent transmission systems with the earlier recommended upgrades and configuration in service. An Ad Hoc Study Group was assembled with members from MISO, Ameren, Cinergy, CWLP, SIPC and TVA. The Ad Hoc Study Group reviewed and approved the assumptions and results for this project. The MISO LGIP queue lists an expected in-service date for this project of 10/01/2008.

The power flow analysis focused on thermal loadings under both normal and contingency conditions. In addition, a comparison of the bus voltages before and after the addition of the incremental generation was made. While thermal loadings above the emergency rating for several facilities in the study areas increased due to the incremental generation, the distribution factors for these facilities as related to the output of the G495 project were below the MISO recommended cutoff of 5 percent. Therefore no upgrades have been attributed to G495.

The proposed project was also evaluated for the Ameren planning criteria tests. Two limiting Ameren facilities with the appropriate response factors were identified. One facility was found limiting for a line and generator outage and the other facility was found limiting for the Ameren import test. These conditions were deemed to be pre-existing and thus were not attributed to the G495 project.

II. Study Methodology and Assumptions

A. Basecase Development

The power flow model was based on the 2004 series MMWG 2009 summer case where loads are based on the peak summer forecast. Relevant modeling changes were incorporated and reviewed by the Ad Hoc Study Group. This model became the Basecase 0 and was used as the foundation for the development of additional basecases which incorporated higher queued projects. Four additional basecases were built to determine the impact of various generation projects on the transmission system. A flow chart of the basecase development process is provided in Appendix A.

Basecase 1 included two additional projects added to Basecase 0. Project IP10 is a 65 MW incremental increase in the Clinton Unit 1 generation. This incremental generation was dispatched to the ComEd area along with existing generation from Clinton Unit 1. Project G107 included two 750 MW units in Kentucky. One unit will be connected to the TVA system and the other one will be connected to the Big Rivers system. Generation connected to the TVA system was dispatched to TVA load. Generation connected to the Big River system was dispatched to MISO load outside of Illinois. This project was included due to its size and potential impact on the transmission system in conjunction with the G495 project.

Basecase 2 included one additional project added to Basecase 1. Project IP14 is the original 1500 MW from the proposed Prairie State generators. It was dispatched to MISO load outside of Illinois.

Basecase 3 included seven additional projects added to Basecase 2. These projects have higher queue positions than the G495 project. IP17 is a 550 MW project to be located near Benton, Illinois. AMO8 is an 800 MW project at Rush Island. G475 is an incremental 56 MW increase at the Callaway Plant. G436 is an incremental 50 MW increase at the Newton Plant. G478 is a 116 MW project at Venice. G412 is a 200 MW project at Dallman. G399 is a 300 MW project in Indiana. G431 is a 600 MW project in Indiana. All of these projects were dispatched to MISO load outside of Illinois.

Basecase 4 included one additional project added to Basecase 3. Project G495 is the 150 MW incremental generation at Prairie State that is being studied. It was dispatched to MISO load outside of Illinois. A one-line diagram of the Prairie State 345 kV facilities and the nearby transmission system is shown below in Figure 1.

Figure 1
Prairie State 345 kV One-Line

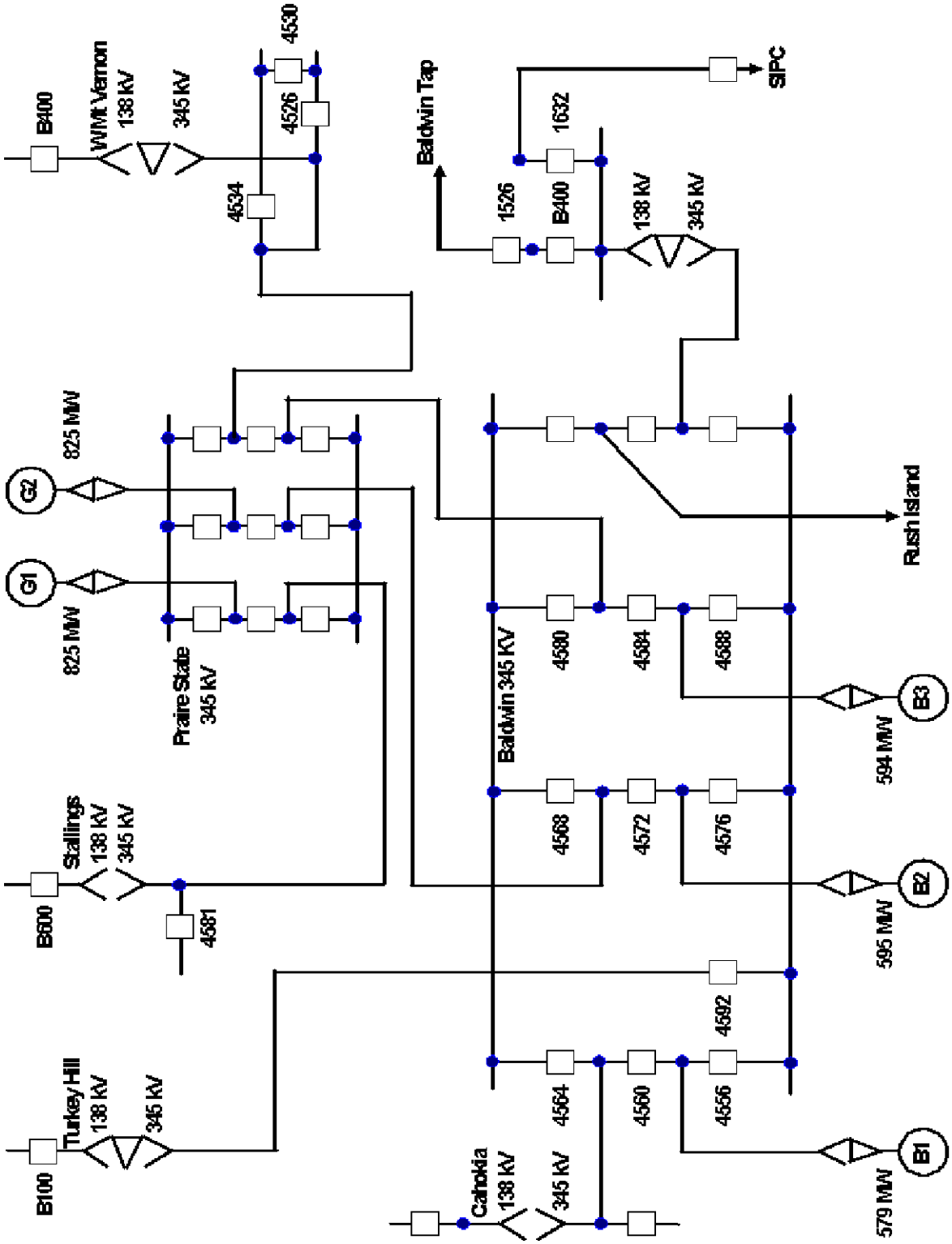

B. Monitored Elements

The areas monitored in this analysis included TVA, DOE, CINERGY, SIGE, LGEE, BREC, AMRN, IP, CILCO, CWLP and SIPC. Branches and tie lines at or above 100 kV (60 kV for SIPC) were monitored in each area.

C. Contingencies

Each basecase was tested using the planning criteria which were provided by members of the Ad Hoc Study Group. The following summarizes the specific criteria which were deemed applicable and were evaluated in this study:

1. System performance under normal conditions (N-0),
2. System performance under single transmission contingency conditions (N-1),
3. System performance under Ameren generator outage conditions (N-1),
4. Impact of selected double contingencies (N-2),
5. System performance under single transmission contingency conditions with any single Ameren or nearby generator out of service,
6. Ameren non-simultaneous and simultaneous import capability,
7. Ameren non-simultaneous and simultaneous export capability.

III. Results

A. System Performance Under Normal Conditions

The transmission system was evaluated under normal or non-contingent conditions. The thermal loading above the normal ratings that resulted under normal conditions are shown below:

1. Basecase 1
   - 27139 11ETOWN 138 - 27212 11 HARDN 138 1 103.5%
   - 25926 08CHRLES 138 - 26330 08WEND9 138 1 103.2%

2. Basecase 2
   - 27139 11ETOWN 138 - 27212 11HARDN 138 1 106.1%
   - 25926 08CHRLES 138 - 26330 08WEND9 138 1 103.6%

3. Basecase 3
   - 27139 11ETOWN 138 - 27212 11 HARDN 138 1 109.7%
   - 25926 08CHRLES 138 - 26330 08WEND9 138 1 103.6%
   - 32411 PWR JCTB 138 - 37135 POWER; 138 1 100.4%

4. Basecase 4
   - 27139 11ETOWN 138 - 27212 11 HARDN 138 1 110.0%
   - 25926 08CHRLES 138 - 26330 08WEND9 138 1 103.7%
   - 32411 PWR JCTB 138 - 37135 POWER; 138 1 101.1%

The ETOWN to HARDN 138 kV line is located in the LGEE area. No concerns were expressed about the loading on this line. The CHRLES to WEND9 138 kV line is located in the CINERGY area. According to CINERGY, there are upgrades planned which will relieve the loading on this facility. The Powerton to Powerton Junction rating is based on a Commonwealth Edison directional relay limit. This line is a tie line between Commonwealth Edison and AmerenIP in central Illinois. The rating specified in the power flow is for flow out of the Powerton Substation into Powerton Junction. In the power flow cases being used for this study, the flow is from Powerton Junction into the Powerton Substation and therefore a higher rating for this line would be applicable and the loading will be below the rating.

B. System Performance Under Single Transmission Contingency Conditions

A contingency list representing single outages of transmission circuits and transformer outages was developed with the input of the adhoc group members. Table 1 provides the thermal loadings above the emergency rating in percent that resulted from the simulation of these contingencies. The first column in the table shows the limiting facilities while the second column provides the loadings for Basecase 0. A number of branches are shown in the TVA and SIPC areas under Basecase 0. Three additional branches appear in the TVA area under Basecase 1. There were no new entries for Basecase 2. Fifteen additional branches are shown in the TVA, SIPC and Ameren areas under Basecase 3. There were no new entries for Basecase 4.

The last column in Table 1 shows the difference between the loadings found in Basecase 4 and Basecase 3. In general, the differences were small with the largest being 2.8 percent. Outage and power transfer distribution factors (OTDF/PTDF) were calculated for the identified facilities listed in Table 1. The largest OTDF/PTDF was 3.8/1.6 percent which is below the MISO recommended cutoff value of 5 percent. Therefore no mitigation, if any, is attributed to G495.

Since the primary focus of this study was to evaluate the impact of G495, no further investigation was done for the thermal loadings shown in Table 1. For example, while Basecase 2 included related upgrades, new generation represented in Basecase 1 and Basecase 3 may not have included all the related upgrades.

TABLE 1
Single Line Contingency Loading (% of Summer Emergency Rating)

** From bus ** ** To bus ** CKT	Base 0	Base 1	Base 2	Base 3	Base 4	4 Vs 3
18002 5SHAWNE1 161 18033 5MCCRACK 161 1	100.7			103.8	104.2	**0.40**
18002 5SHAWNE1 161 18038 5C-37A 161 1				109.1	110.7	**1.60**
18090 5COMPTLN 161 18890 5LASCASS 161 1	103.0	110.3	111.2	112.4	112.0	**(0.40)**
18411 5SHELBY1 161 18556 5N.E.GAT 161 2				101.2	101.5	**0.30**
18417 5SHELBY2 161 18556 5N.E.GAT 161 1				101.6	101.9	**0.30**
18441 5MADISON 161 19199 5REDSTON 161 1				100.6	100.6	**-**
18470 5ALCOASP 161 18897 5CHILHOW 161 1	104.1	101.3	100.6			**-**
18535 5PICKWIC 161 19059 5KIMBERL 161 1	102.3	101.6	101.3	101.1	101.1	**-**
18541 5POPLAR 161 18542 5N.PRIMA 161 1	107.1	107.1	107.1	107.1	107.1	**-**
18684 5INTERCH 161 18743 5SMYRNA 161 1	100.4	105.7	107.5	109.2	109.4	**0.20**
18684 5INTERCH 161 19083 5HURRICA 161 1	115.2	120.4	122.2	123.9	124.1	**0.20**
18691 5BOWL GR 161 18880 5LOSTCTY 161 1		103.1	106.1	109.7	110.0	**0.30**
18698 5DAVSN 2 161 19070 5GRASL T 161 1	100.7			101.4	101.5	**0.10**
18705 5CENTER 161 18756 5SMTH TN 161 1	100.1	106.9	108.4	110.2	110.4	**0.20**
18711 5GALLATI 161 18890 5LASCASS 161 1	116.9	124.3	125.1	126.4	125.9	**(0.50)**
18724 5PIN HOO 161 18738 5CANE RI 161 1	101.7	109.0	108.3	107.6	107.6	**-**
18724 5PIN HOO 161 18743 5SMYRNA 161 1	107.9	112.0	113.0	114.3	114.4	**0.10**
18724 5PIN HOO 161 19083 5HURRICA 161 1	111.1	114.9	116.1	117.2	117.3	**0.10**
18743 5SMYRNA 161 19527 5BLCKMNT 161 1	103.3	111.1	113.5	116.2	116.4	**0.20**
18744 5MURFREE 161 18745 5E MURFR 161 1		107.3	108.1	109.2	109.3	**0.10**
18744 5MURFREE 161 19527 5BLCKMNT 161 1		104.1	106.5	109.2	109.4	**0.20**
18746 5WARTRAC 161 18762 5N TUL T 161 1	121.4	114.3	114.1	113.6	113.6	**-**
18885 5GALLAT2 161 19511 5WGALLTP 161 1	100.6					**-**
30516 EFFGHMNW 138 30524 EFFINGHM 138 1				100.2	102.2	**2.00**
31124 MER 2&3 138 31656 RUDR 2 138 1				102.8	103.2	**0.40**
32345 CLTN TAP 138 32374 BLMGTN E 138 1				102.9	103.7	**0.80**
32348 BROKAW 138 32391 ST FARM1 138 1				100.2	100.5	**0.30**
32411 PWR JCTB 138 37135 POWER; 138 1	101.4	103.7	111.5			**-**
32416 MONMOUTH 138 32415 GALESBRG 138 1				100.7	101.8	**1.10**
90003 2FORMAN 69.0 90012 2MTRPS_T69.0 1				120.5	122.5	**2.00**
90116 2GLATA_T69.0 90114 2AMCLTP169.0 1	110.1	110.2	110.3	110.0	110.0	**-**
90118 2LAKE_TP69.0 90110 2PLNT_FR69.0 1	100.9		102.5	115.2	116.3	**1.10**
90118 2LAKE_TP69.0 90163 2WEBB 69.0 1				107.7	108.9	**1.20**
90126 2AMCLTP269.0 90107 2HARRISB69.0 1	132.8	134.1	132.1	130.9	130.6	**(0.30)**
90163 2WEBB 69.0 90159 2VIENNA 69.0 1				102.0	103.1	**1.10**
90200 2CARML_S69.0 90107 2HARRISB69.0 1	139.2	140.5	138.5	137.3	137.0	**(0.30)**
90211 2GALTN_S69.0 27567 14MORGAN69.0 1				108.7	111.5	**2.80**
90114* 2AMCLTP169.0 361 90116 2GLATA_T69.0 361 1	111.6	111.7	111.7	112.0	112.0	**-**

The outage of all single branches in the areas being monitored for this study was simulated next. This list was automatically generated by the MUST software program. There are duplications between this list and the contingency list developed by the adhoc group. Evaluation of all singles ensures that all single contingencies are simulated along with contingencies that do not involve a fault.

Table 2 provides the thermal loadings above the emergency rating that resulted from the simulation of these contingencies. The first column shows the limiting facilities while the second column contains loadings for Basecase 0. A number of branches are shown in the TVA, ECAR, Ameren and SIPC areas under Basecase 0. Three additional branches appear in both the TVA and ECAR areas under Basecase 1. Four additional branches in the TVA and three additional branches in the ECAR areas are listed under Basecase 2. Thirty-two additional branches are shown in TVA, ECAR, Ameren and SIPC areas under Basecase 3. One additional branch in both the Ameren and SIPC areas appear under Basecase 4.

The last column in the table shows the difference between the loadings found in Basecase 4 and Basecase 3. In general, the differences were small with the largest being 2.8 percent. Outage and power transfer distribution factors (OTDF/PTDF) were calculated for the facilities listed in Table 2. The largest OTDF/PTDF was 3.8/1.6 percent which is below the MISO recommended cutoff value of 5 percent. Therefore no mitigation, if any, is attributed to G495.

Since the primary focus of this study was to evaluate the impact of G495, no further investigation was done for the loadings shown in Table 2. For example, while Basecase 2 included related upgrades, new generation represented in Basecase 1 and Basecase 3 may not have included all the related upgrades.

TABLE 2
Single Branch Contingency Loading (% of Summer Emergency Rating)

** From bus ** ** To bus ** CKT	Base 0	Base 1	Base 2	Base 3	Base 4	**4 vs 3**
18002 5SHAWNE1 161 18033 5MCCRACK 161 1				101.0	101.4	**0.40**
18002 5SHAWNE1 161 18038 5C-37A 161 1	144.5	138.1	146.2	155.2	156.1	**0.90**
18024 3GUNTERV 115 18642 5GUNT HP 161 1	153.4	153.9	154.4	153.4	153.4	**-**
18024 3GUNTERV 115 18642 5GUNT HP 161 2	154.5	155.0	155.5	154.5	154.5	**-**
18027 5SUMMER 161 29539 20SSHADT 161 1				104.1	104.9	**0.80**
18038 5C-37A 161 18403 5SHAW G9 161 1	179.6	175.6	175.6	175.6	175.6	**-**
18090 5COMPTLN 161 18890 5LASCASS 161 1	106.7	114.0	114.8	115.6	115.6	**-**
18402 5SHAWNE2 161 18403 5SHAW G9 161 1	105.1	102.8	102.8	102.8	102.8	**-**
18411 5SHELBY1 161 18556 5N.E.GAT 161 2				101.2	101.5	**0.30**
18417 5SHELBY2 161 18556 5N.E.GAT 161 1				101.6	101.9	**0.30**
18441 5MADISON 161 19199 5REDSTON 161 1				100.6	100.6	**-**
18450 5WILSNTN 161 18914 5GLADV T 161 1				100.7	100.9	**0.20**
18470 5ALCOASP 161 18897 5CHILHOW 161 1	104.1	101.3	100.6			**-**
18481 3FRONT S 115 18549 3N.PRIMA 115 1			117.4			**-**
18483 3THIRD S 115 18569 3S.PRIMA 115 1			116.6			**-**
18535 5PICKWIC 161 19059 5KIMBERL 161 1	106.9	106.2	105.9	105.7	105.7	**-**
18541 5POPLAR 161 18542 5N.PRIMA 161 1	107.1	107.1	107.1	107.1	107.1	**-**
18684 5INTERCH 161 18743 5SMYRNA 161 1	100.4	105.7	107.5	109.2	109.4	**0.20**
18684 5INTERCH 161 19083 5HURRICA 161 1	115.2	120.4	122.2	123.9	124.1	**0.20**
18691 5BOWL GR 161 18880 5LOSTCTY 161 1		103.1	106.1	109.7	110.0	**0.30**
18698 5DAVSN 2 161 19070 5GRASL T 161 1	100.7			101.4	101.5	**0.10**
18705 5CENTER 161 18756 5SMTH TN 161 1	100.1	106.9	108.4	110.2	110.4	**0.20**
18711 5GALLATI 161 18890 5LASCASS 161 1	120.7	128.0	128.8	129.6	129.6	**-**
18724 5PIN HOO 161 18738 5CANE RI 161 1	101.7	109.0	108.3	107.7	107.6	**(0.10)**
18724 5PIN HOO 161 18743 5SMYRNA 161 1	107.9	112.0	113.0	114.3	114.4	**0.10**
18724 5PIN HOO 161 19083 5HURRICA 161 1	111.1	114.9	116.1	117.2	117.3	**0.10**
18743 5SMYRNA 161 19527 5BLCKMNT 161 1	103.3	111.1	126.5	116.2	116.4	**0.20**
18744 5MURFREE 161 18745 5E MURFR 161 1		107.3	108.1	109.2	109.3	**0.10**
18744 5MURFREE 161 19527 5BLCKMNT 161 1		104.1	119.4	109.2	109.4	**0.20**
18746 5WARTRAC 161 18762 5N TUL T 161 1	121.4	114.3	114.1	113.6	113.6	**-**
18790 5KNGSTN 161 18795 5K-27 161 1			102.1			**-**
18790 5KNGSTN 161 18795 5K-27 161 2			103.8			**-**
18885 5GALLAT2 161 19511 5WGALLTP 161 1	100.6					**-**
25382 08DRESSR 345 25554 08DRESSR 138 1			100.8			**-**
25382 08DRESSR 345 25554 08DRESSR 138 2			100.8			**-**
25422 08WAB R 230 25432 08STAUTN 230 1				104.4	104.3	**(0.10)**
25432 08STAUTN 230 25557 08STAUTN 138 1				103.3	103.3	**-**
25432 08STAUTN 230 25557 08STAUTN 138 2				103.5	103.5	**-**
25436 08GRNFLD 138 25465 08GRNBOR 138 1				103.3	103.3	**-**
25500 08SEYMOU 138 25538 08AIRDJ 138 1	105.6	105.7	108.0	120.1	120.3	**0.20**
25501 08PLESNT 138 25538 08AIRDJ 138 1	105.7	105.9	108.1	120.2	120.4	**0.20**
25557 08STAUTN 138 25558 08GNCSTJ 138 1				100.4	100.5	**0.10**
25558 08GNCSTJ 138 25559 08LSTARJ 138 1				100.4	100.5	**0.10**
25559 08LSTARJ 138 25560 08GNCSTL 138 1	102.6	102.8	104.4	114.3	114.4	**0.10**
25877 08AKSTL1 138 26275 08TDHNTR 138 1	111.0	111.0	111.0	111.0	111.0	**-**
25878 08AKSTL2 138 25966 08D.CRK2 138 1	110.4	110.4	110.4	110.4	110.4	**-**

TABLE 2 (continued)
Single Branch Contingency Loading (% of Summer Emergency Rating)

** From bus ** ** To bus ** CKT	Base 0	Base 1	Base 2	Base 3	Base 4	**4 vs 3**
25957 08CRNLTP 138 25978 08DIMICK 138 1	110.2	110.2	110.2	110.2	110.3	**0.10**
25978 08DIMICK 138 26180 08P.UN2 138 1	135.5	135.5	135.5	135.6	135.6	**-**
26210 08SGROVE 138 26211 08SGROVE 345 1	104.2	104.4	104.0	102.7	102.6	**(0.10)**
26948 11ADAMS 138 27513 11TYRONE 138 1	102.5	102.8	102.5	103.2	103.1	**(0.10)**
26973 11ASHBOT 138 27194 11GRADE 138 1	112.1	113.6	114.0	115.4	115.4	**-**
27066 11CLAYSM 138 27221 11HIGBY 138 1				100.5	100.7	**0.20**
27068 11CLVRPR 138 27493 11TIPTOP 138 1				101.6	102.4	**0.80**
27110 11DELVIN 161 27237 11HYDEN 161 1	106.2	106.2	100.2			**-**
27139 11ETOWN 138 27212 11HARDN 138 1				108.2	108.6	**0.40**
27189 11GR RVR 161 27190 11GR RVR 138 1				100.8	101.4	**0.60**
27189 11GR RVR 161 27190 11GR RVR 138 2				101.1	101.8	**0.70**
27190 11GR RVR 138 27362 11OHIO C 138 2		100.2	104.3	109.2	109.5	**0.30**
27211 11HARDN 345 27212 11HARDN 138 1		101.6	106.7	112.9	113.4	**0.50**
27237 11HYDEN 161 23086 05WOOTEN 161 1		102.0	104.1	107.2	107.3	**0.10**
27253 11KNOB C 138 27324 11MILCRK 138 1	104.0					**-**
27362 11OHIO C 138 27462 11SHREWS 138 1			100.2	106.8	107.3	**0.50**
27410 11POND C 138 27493 11TIPTOP 138 1	102.7					**-**
30282 CAPE GIR 161 31976 WEDEKN T 161 1	104.1	107.6				**-**
30516 EFFGHMNW 138 30524 EFFINGHM 138 1				100.2	102.2	**2.00**
30789 IPAVA 138 32407 HAVANA 138 1				110.4	110.7	**0.30**
31124 MER 2&3 138 31656 RUDR 2 138 1				102.8	103.2	**0.40**
31446 PANA 138 31568 RAMSEY 138 1				98.5	100.4	**1.90**
32348 BROKAW 138 32391 ST FARM1 138 1				104.3	104.6	**0.30**
32411 PWR JCTB 138 37135 POWER; 138 1	101.5	103.7	111.5	127.5	128.3	**0.80**
32416 MONMOUTH 138 32415 GALESBRG 138 1				100.7	101.8	**1.10**
90003 2FORMAN 69.0 90012 2MTRPS_T69.0 1				115.7	117.6	**1.90**
90007 2KARNAK 69.0 90202 2FORMN_S69.0 1	125.1	124.8	125.3	125.3	125.4	**0.10**
90026 2ULLIN_T69.0 90007 2KARNAK 69.0 1	115.0	114.7	115.1	115.2	115.2	**-**
90082 2BGRDG_T69.0 90108 2JADR_TP69.0 1				109.6	111.6	**2.00**
90083 2CARTER 69.0 90082 2BGRDG_T69.0 1				119.5	121.6	**2.10**
90083 2CARTER 69.0 90200 2CARML_S69.0 1	110.1		108.5	132.2	134.4	**2.20**
90092 2DALE_TP69.0 90161 2WALPOLE69.0 1	102.0	102.1	102.1	101.8	101.9	**0.10**
90116 2GLATA_T69.0 90114 2AMCLTP169.0 1	118.1	118.3	118.3	118.0	118.0	**-**
90116 2GLATA_T69.0 90124 2KRMG3_T69.0 1	118.0	118.2	118.2	117.9	117.9	**-**
90118 2LAKE_TP69.0 90110 2PLNT_FR69.0 1	103.6		104.5	112.4	113.5	**1.10**
90118 2LAKE_TP69.0 90163 2WEBB 69.0 1				105.0	106.1	**1.10**
90122 2KRMG2_T69.0 90124 2KRMG3_T69.0 1	118.0	118.1	118.2	117.8	117.9	**0.10**
90122 2KRMG2_T69.0 90161 2WALPOLE69.0 1	131.4	131.6	131.7	131.3	131.3	**-**
90126 2AMCLTP269.0 90107 2HARRISB69.0 1	100.8	101.4	100.2			**-**
90158 2SGR_2_T69.0 90156 2SGR_1_T69.0 1				109.4	111.4	**2.00**
90163 2WEBB 69.0 90159 2VIENNA 69.0 1				99.3	100.4	**1.10**
90172 2ILFUELT69.0 90108 2JADR_TP69.0 1				109.4	111.4	**2.00**
90172 2ILFUELT69.0 90156 2SGR_1_T69.0 1				109.7	111.7	**2.00**
90200 2CARML_S69.0 90107 2HARRISB69.0 1	107.1	107.7	106.5	105.6	105.5	**(0.10)**
90211 2GALTN_S69.0 27567 14MORGAN69.0 1				108.7	111.5	**2.80**
90211 2GALTN_S69.0 90158 2SGR_2_T69.0 1				109.3	111.3	**2.00**
90213 2HMLTN_S69.0 90092 2DALE_TP69.0 1	105.0	105.1	105.1	104.9	104.9	**-**

C. System Performance Under Ameren Generator Outage Conditions

Single generator outages were simulated for the generators in the Ameren footprint. No thermal loadings above the emergency rating were identified for these contingencies.

D. Impact of Selected Double Contingencies

Selected double contingencies were evaluated as provided by the adhoc members. Only Ameren and TVA provided double contingencies for this analysis.

Table 3 provides the thermal loadings above the emergency rating that resulted from the simulation of these contingencies. The first column shows the limiting facilities and the second column provides loadings for Basecase 0. Most of these loadings appeared initially using Basecase 0 in the TVA and Ameren areas. Eight additional branches appear in the TVA and Ameren areas under Basecase 1. There are no new entries for Basecase 2. Eleven new branches are shown in the TVA and Ameren areas under Basecase 3. There are no new entries for Basecase 4.

The last column in the table shows the difference between the loadings found in Basecase 4 and Basecase 3. In general, the differences were small with the largest being 1.8 percent. Outage and power transfer distribution factors (OTDF/PTDF) were calculated for the facilities listed in Table 3. The largest OTDF/PTDF was 4.1/1.7 percent which is below the MISO recommended cutoff value of 5 percent. Therefore no mitigation, if any, is attributed to G495.

Since the primary focus of this study was to evaluate the impact of G495, no further investigation was done for the loadings shown in Table 3. For example, while Basecase 2 included related upgrades, new generation represented in Basecase 1 and Basecase 3 may not have included all the related upgrades.

TABLE 3
Double Contingency Loading (% of Summer Emergency Rating)

** From bus ** ** To bus ** CKT	Base 0	Base 1	Base 2	Base 3	Base 4	**4 Vs 3**
18705 5CENTER 161 18756 5SMTH TN 161 1		103.5	104.7	106.4	106.5	**0.10**
18711 5GALLATI 161 18890 5LASCASS 161 1		101.4	102	102.8	102.8	**-**
30089 BAILEY 1 138 30088 BAILEY 345 1				107.7	108.8	**1.10**
30089 BAILEY 1 138 31123 MER 1&4 138 1				100	101.1	**1.10**
30089 BAILEY 1 138 31519 PLATTIND 138 1		101.6		111.9	112.6	**0.70**
30167 BOYD BR 138 31519 PLATTIND 138 1		104.7		114.9	115.7	**0.80**
30167 BOYD BR 138 31774 ST FRANC 138 1	104.6	109.6		119.9	120.6	**0.70**
30266 CAMPBELL 138 31273 MSD 138 1				101.8	103.4	**1.60**
30648 GRAYSUM1 345 30650 GRAY SUM 138 1	111.9	111.9	110.5	111.2	111.1	**(0.10)**
30762 HUSTER 138 31764 SIOUX 2 138 1		100.6	113.1	126.9	128.6	**1.70**
30880 KISKER T 138 96599 4KISKER 138 1				100.9	102.7	**1.80**
31124 MER 2&3 138 31706 SANDY CK 138 1				101.8	102.9	**1.10**
31391 ORGD 1 138 31860 TYSON 138 1				106.1	106.4	**0.30**
31392 ORGD 2 138 31860 TYSON 138 1				103.6	103.8	**0.20**
31518 PLATTINW 138 30090 BAILEY 2 138 1				101.9	102.6	**0.70**
31518 PLATTINW 138 31774 ST FRANC 138 1				104.9	105.6	**0.70**
31706 SANDY CK 138 30090 BAILEY 2 138 1		101.9		124.5	125.6	**1.10**
31723 SELMA 138 31782 STFT 138 1		101.1				**-**
32345 CLTN TAP 138 32374 BLMGTN E 138 1	136.6	139.2	147.3	162.7	163.6	**0.90**
32369 MOWEAQ T 138 32355 PANA IP 138 1				103.9	104.8	**0.90**
32375 LILLY 138 32411 PWR JCTB 138 1	101.5	100.8	100.1			**-**
32376 CLT RT54 138 32345 CLTN TAP 138 1	104.3	106.2	112.1	123.4	124.1	**0.70**
32377 CO HY 20 138 32363 N DEC E 138 1	113.1	114.6	119.6	129.1	129.7	**0.60**
32378 NORMAL E 138 32414 CBTWANDA 138 1	149.8	150.9	153.5	159.1	159.5	**0.40**
32411 PWR JCTB 138 37135 POWER; 138 1	101.6	103.9	111.7			**-**
32416 MONMOUTH 138 32415 GALESBRG 138 1				100.7	101.9	**1.20**
32476 S CLNTN 138 32376 CLT RT54 138 1	116.8	118.7	124.7	136.1	136.8	**0.70**
32476 S CLNTN 138 32377 CO HY 20 138 1		101.4	106.3	115.7	116.3	**0.60**

E. System Performance Under Single Transmission Contingency Conditions with any Single Ameren or Nearby Generator Out of Service

A line and generator outage contingency list was developed from the original contingency list submitted by the adhoc group. Remote contingencies in the TVA and ECAR areas were removed and the remaining contingencies were combined with each generator outage considered. Replacement power was provided from remote areas. The 150 MW from the G495 project was then exported to MISO load using Basecase 3. The following constraints were identified where an Ameren facility with a distribution factor of 5 percent or greater was limiting:

The Coffeen to Pana 345 kV line was limiting for the outage of the Coffeen North to Coffeen 345 kV line with the Clinton Unit 1 generator out of service; however, this was also limiting for the same contingency conditions prior to the dispatch of G495. Although the loading increased by 2 percent with G495, the mitigation plan, if one were to be developed is not attributed to G495.

F. Ameren Non-Simultaneous and Simultaneous Import Capability

Non-simultaneous imports of 1200 MW were simulated into all of Ameren, Ameren east of the Mississippi River and Ameren west of the Mississippi River from East (AEP), South (Entergy), West (Western Resources) and North (Xcel). Available generation dispatched in the power flow case excluding generation near G495 (Baldwin, Rush Island) was used as the sink for these imports. Load in the appropriate area was used as the source. The analysis was performed with and without G495 dispatched i.e. Basecase 4 versus Basecase 3. A distribution factor of 3 percent of greater was used to determine if a facility was limiting for imports.

No valid Ameren constraints were found when importing from any of the four directions to all of Ameren or Ameren east of the Mississippi River. Imports from AEP or Entergy to Ameren west of the Mississippi River were constrained by the Rush Island to Bailey 345 kV line. The imports were limited to 800-900 MW for Basecase 4 and 900-1000 for Basecase 3. Generally there was about 100 MW difference in the import capability between Basecase 4 and Basecase 3.

Simultaneous imports of 1800 MW were simulated into all of Ameren, Ameren east of the Mississippi River and Ameren west of the Mississippi River from the East, North, West and South. Available generation dispatched in the power flow case excluding generation near G495 (Baldwin, Rush Island) was used as the sink for these imports. Load in the AEP, Entergy, Western Resources and Xcel areas were used as the source with one area weighted more heavily than the others in each direction. The

analysis was performed with and without G495 dispatched i.e. Basecase 4 versus Basecase 3. A distribution factor of 3 percent of greater was used to determine if a facility was limiting for imports.

No valid Ameren constraints were found when importing from AEP, Entergy, Western Resources or Xcel to all of Ameren or Ameren east of the Mississippi River. Imports from AEP, Entergy, Western Resources or Xcel to Ameren west of the Mississippi River were all constrained by the Rush Island to Bailey 345 kV line. The imports were limited to 1000-1200 MW for Basecase 4 and 1100-1300 for Basecase 3. Generally there was about 100 MW difference in the import capability between Basecase 4 and Basecase 3.

The Rush Island to Bailey 345 kV line was limiting for both non-simultaneous and simultaneous imports with and without G495. Although the import capability decreased slightly with G495, the mitigation plan, if one were to be developed is not attributed to G495. This constraint was also identified and discussed in the AMO8 impact study performed by Ameren.

G. Ameren Non-Simultaneous and Simultaneous Export Capability

There is an additional 3222 MW of exports out of the Ameren footprint in the case with G495 and prior queued generation projects dispatched as compared to the MMWG basecase. This exceeds the Ameren 1500 MW simultaneous export test level; therefore, no further export testing is necessary in this study.

H. Voltage Comparison

The voltage impact of G495 was examined by comparing bus voltages from Basecase 4 with Basecase 3. Bus voltages were compared for each bus in the monitored areas. Excluding generator buses the voltage change was typically less that 0.1 percent. Some voltages were slightly higher while others were slightly lower. No appreciable impacts were found.

IV. Facility Impacts and Upgrades

Two constraints were identified in the evaluation of the planning criteria; however, they were deemed to be pre-existing conditions as far as G495 (150 MW) is concerned and are not attributable to the G495 project. Therefore no upgrades are required for G495.

V. Conclusion

The power flow analysis focused on thermal limitations under both normal and emergency conditions. In addition, a comparison of the bus voltages before and after the addition of the incremental generation was made. While thermal loadings on several facilities in the study areas increased due to the incremental generation (150 MW), the distribution factors for these facilities as related to the output of the G495 project were below the MISO recommended cutoff of 5 percent. Therefore no upgrades have been attributed to G495.

The proposed project was also evaluated for the Ameren planning criteria tests. Two limiting Ameren facilities with the appropriate response factors were identified. One facility was found limiting for a line and generator outage and the other facility was found limiting for the Ameren import test. These conditions were deemed to be pre-existing and thus were not attributed to the G495 project.

Appendix A

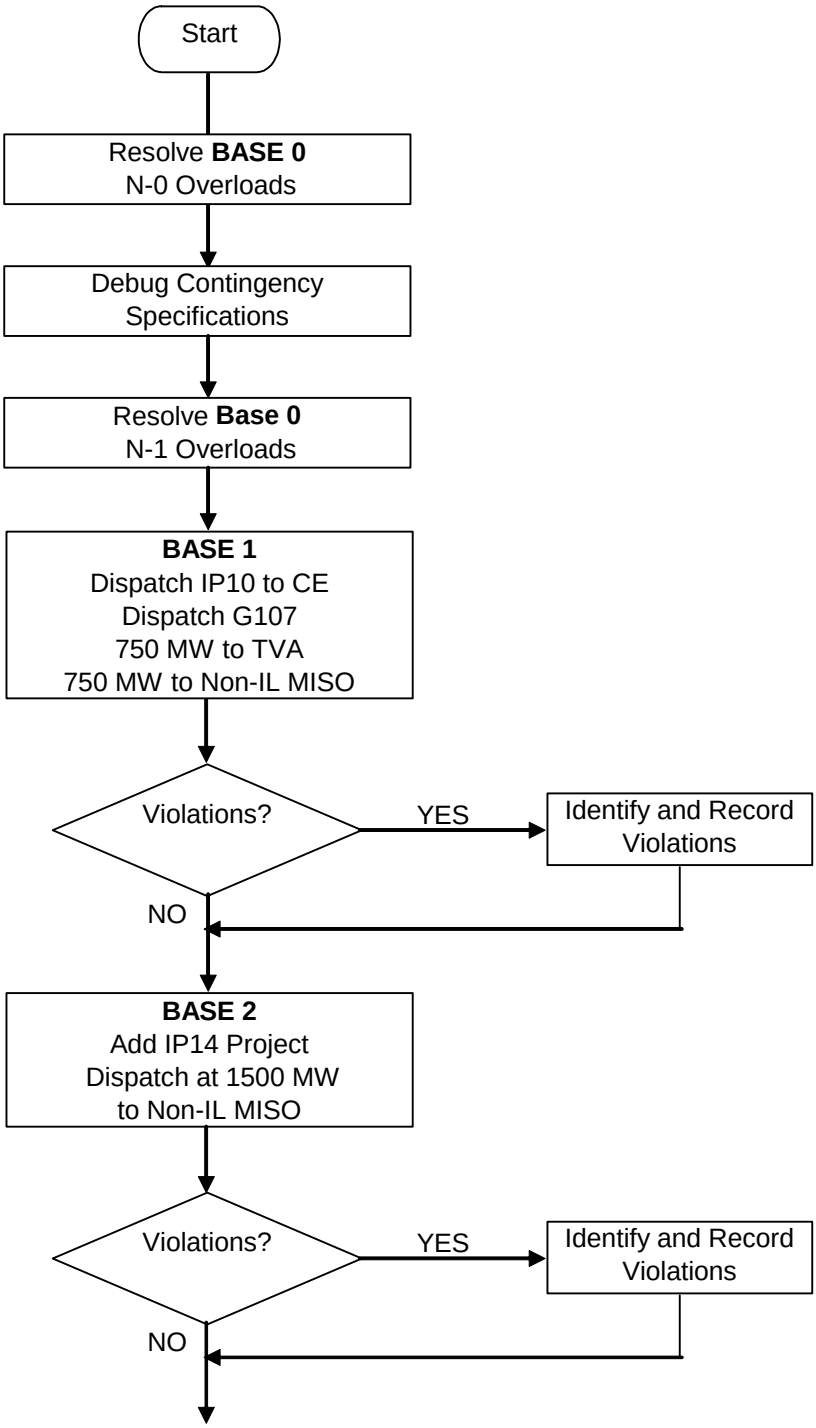
Start
Resolve **BASE 0**
N-0 Overloads
Debug Contingency
Specifications
Resolve **Base 0**
N-1 Overloads
BASE 1
Dispatch IP10 to CE
Dispatch G107
750 MW to TVA
750 MW to Non-IL MISO
Violations?
YES
Identify and Record
Violations
NO
BASE 2
Add IP14 Project
Dispatch at 1500 MW
to Non-IL MISO
Violations?
YES
Identify and Record
Violations
NO

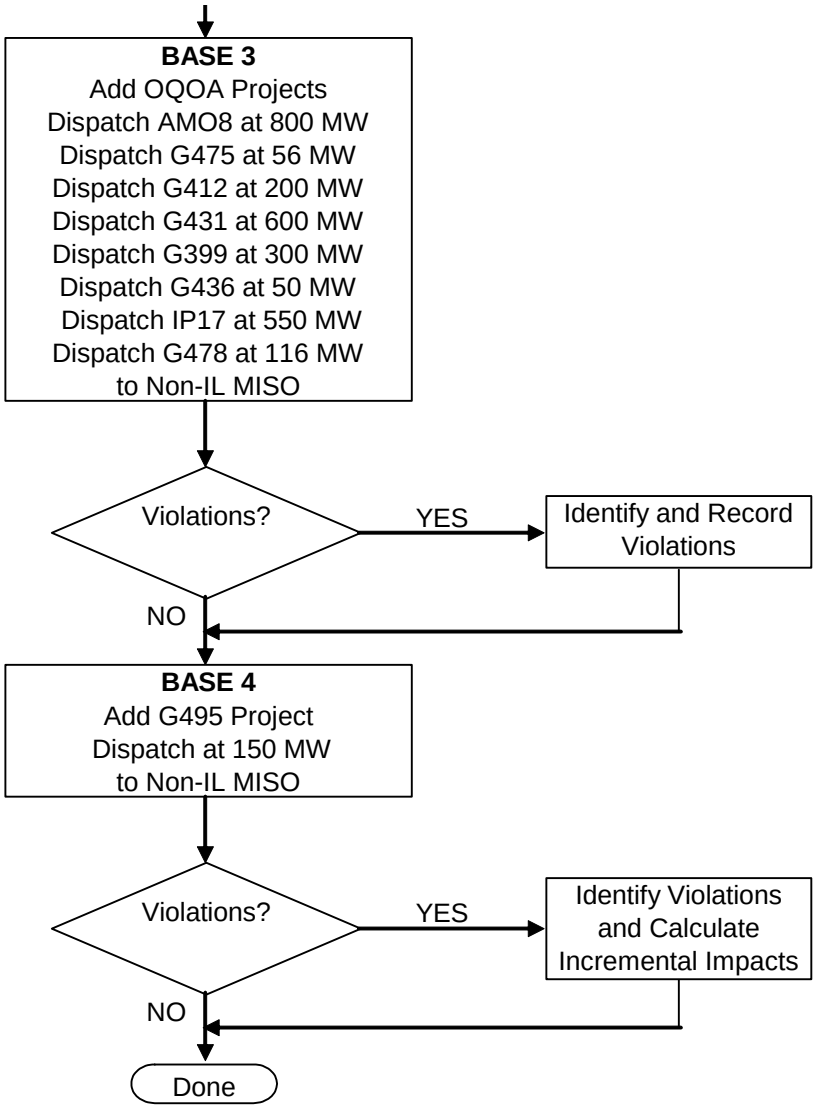

Non-IL MISO includes Areas FIRSTENE, HE, CIN, SIGE, LGEE, IPL, NIPS, METC, ITC, ALTW, ALTE, WE, WPS, MGE, UPPC MIPU, XEL, MP, GRE, OTP, LES, MH

Project G495 Stability Study
Prairie State Energy Center

Prepared for Midwest ISO

MISO LGIP Queue # 38393-01

Ameren Services
Energy Delivery Technical Services
Electric Planning
Transmission & Interconnections
January, 2006

Summary

This report presents the results of the stability study of machines at Peabody Energy (PE)-Prairie State Energy Center (PSEC). The generation level studied here is 1650 MW, which represents two MISO requests IP14 (1500 MW) and G495 (150 MW). The stability study for IP14 was completed in 2003. However, the machine parameters have been changed since completion of that study, so this study covers both a total of 1650 MW and new parameters.

Based on the PE PSEC configuration, dynamic models and their data parameters, there is no appreciable degradation of transient stability due to IP14 plus G495. However, to maintain stability of the Dynegy Baldwin Units, for two of the studied scenarios, backup clearing time reduction, if can be implemented reliably, is required. The System Protection group at Ameren has indicated that the required critical clearing time can be achieved by replacing the relays at Baldwin switchyard. Also, the local modes of PSEC machines were found to be poorly damped for some of the scenarios studied. These scenarios include fault conditions at Prairie State 345 kV bus. The poorly damped responses of machines at PSEC require correction.

Use of modern DeltaP/Omega power system stabilizers (PSS) on the excitation systems of the Prairie State machines showed improvement in the simulation results and must be implemented. Prior to installing PSS, excitation system testing must be performed to verify excitation system models and their parameters. The PSS model parameters used in this study, however, were not necessarily intended to be optimal, and they are not, but good enough for the purpose of this PSS feasibility study. Developing optimized tunable parameters for the specific PSS application are beyond the scope of this particular study.

The damping of Dynegy Baldwin Units 1, 2, and 3, for the scenarios studied, is deemed acceptable based on the field tested data provided by Dynegy. The damping of AmerenUE Rush Island Units 1 and 2 for the scenarios studied is found to be in acceptable range. However, the damping of Rush Island Unit 3 (MISO AM08 project) is found to be poorly damped for conditions resulting in outage of two outlet lines at Rush Island. The Rush Island Unit 3 is a proposed unit with in-service date of 2009. The manufacturer supplied typical excitation system parameters of this unit were used in the study. Ameren requires that the excitation system of this unit be tested to get proper modeling information. At that time, the need for the power system stabilizer on Rush Island Unit 3 should be reassessed to confirm the impact of G495.

The results of the simulations performed for scenarios submitted by the Ad Hoc group indicate no appreciable degradation of transient stability due to IP14 plus G495.

Peabody Energy should verify that out-of-step protection is incorporated in their generation protection schemes. There may be conditions other than those studied here that could impact the stability of the PSEC plant.

General

The basecase model used for this study was the NERC SDDWG 2004 series 2006 winter peak case. This Basecase model was reviewed and approved by the Ad Hoc study group. The Ad Hoc for this study consists of members from MISO, Ameren, Cinergy, CWLP, SIPC and TVA. The study was performed using PTI's PSS/E, and Powertech's SSAT small-signal stability software package. The study work was performed for MISO by Ameren. The impact on Ad Hoc study group systems was studied by the contingencies provided by Ameren, SIPC, and TVA. The study work was performed for MISO by Ameren.

The Units 1 and 2 at PSEC are dispatched at winter rating of 895 MW (gross) each, for a plant total of 1790 MW (gross). An auxiliary load of 70 MW is modeled at the terminals of each unit.

Based on the information received from MISO including the one-line shown in Appendix A, Ameren has performed the simulations for this study. Any changes to the information provided and/or connection configuration would impact the results reported here and would require a restudy.

Ameren Transmission Planning Criteria

The stability study was performed using Ameren's transmission planning criteria.

Plant outlet transmission is considered adequate, from the standpoint of transient stability, when

1. With all lines in service, the plant and remainder of the system shall remain stable when a sustained close-in three-phase fault on any outlet line is cleared in primary clearing time.
2. With all lines in service, the plant and the remainder of the system shall remain stable when a close-in single-line-to-ground fault on any two circuits of a multiple circuit tower line is cleared in primary clearing time.
3. With one outlet line out of service, the plant and the remainder of the system shall remain stable when a sustained close-in three-phase fault on any of the remaining lines is cleared in primary clearing time.
4. With all lines in service, the system and the remainder of the plant units shall remain stable when a sustained close-in double-line-to- ground (2-L-G) fault* on any Ameren 345kV, 230, 161 or 345 kV outlet line is cleared in breaker-failure back-up clearing time including tripping of a transmission facility and generating unit(s), if any, on the bus associated with the "stuck breaker".

*: Callaway Plant shall meet the three-phase fault test as outlet for this plant was designed for three-phase faults.

Simulations and other considerations

a) The transient stability tests 2, 3, and 4 above are considered a double-contingency test. The "stuck breaker" is considered one of the contingencies in test 4.
b) Any of the tests 1, 2, 3, or 4 for outlet of new generation shall not in anyway degrade existing stability limits including critical clearing times of any of the nearby plants.
c) The term “stable” in above criteria 1 through 4 means satisfactorily damped post-disturbance generating unit power oscillations. (Damping ratio of 3% or higher with excitation system parameters, based on field-testing; otherwise, damping ratio to be 5% or higher).
d) Plant outlet transmission configuration resulting in no outlet transmission for test 3 or 4 or both shall require installation of out-of-step-protection on generators, and shall not in anyway degrade existing stability limits including critical clearing times of any of the nearby plants or result in system instability.
e) In test 4 for the “stuck breaker” simulation, a due consideration shall be given to down-grading of the initiating multi-phase fault to a single-line-to ground fault if the associated breakers are equipped with the independent pole operated (IPO) mechanism.
f) To account for the impacts of other system conditions, winter peak output ((MW and Mvar) of the generating unit(s) shall be considered.
g) For the non-peaking units at plants connected to the 345 kV system, a light load system condition shall also be considered.
h) For test 3 above, a planned reduction in generation associated with the out-of-service outlet line may be considered to maintain plant stability.
i) Use of special protection scheme (SPS) shall not be allowed for test 1 or 2. If SPS is used to meet test 3 or 4 above, it shall meet the requirements as defined in MAIN Guide 10 (or related NERC Reliability Standard).

Prairie State Plant Stability

The stability of the Prairie State plant was studied over a total of 88 different scenarios. The first group of scenarios, scenarios 1 through 6, involves application of three phase faults on various Prairie State 345 kV outlet transmission lines and GSU transformers with primary clearing. The next group, Scenarios 7 and 8, involves application of three-phase fault on common-tower Prairie State 345 kV outlet lines cleared in primary clearing time. The next group of scenarios, Scenarios 9 through 76, involves the prior outage of Prairie State, Baldwin, and Rush Island plant 345 kV outlet transmission lines one at a time and application of three phase faults on Prairie State 345 kV outlet transmission lines or GSU transformers cleared in primary clearing time. The last group of scenarios, Scenarios 77 through 88, involves application of double line to ground fault on various Prairie State 345 kV outlet transmission lines and GSU transformers with breaker failure backup clearing.

Summary of scenario descriptions are shown below in Table 1. Plots are provided only for scenarios marked with * in scenario number column. Note that for each of scenarios listed above the simulations were run for 0.5 seconds prior to the application of any disturbance. This 0.5 second delay can clearly be seen in the corresponding scenario figures.

Table 1
Prairie State Fault Scenario Summary

Scenario No.	Contingency Type	Figure No.	Stability Assessment
1*	Three-phase fault on Prairie State-Stallings 345 kV at Prairie State	1	Stable, acceptable damping
2*	Three-phase fault on Prairie State-Mt. Vernon 345 kV at Prairie State	2	Stable, acceptable damping
3*	Three-phase fault on Baldwin-Prairie State-1 345 kV at Prairie State	3	Stable, acceptable damping
4*	Three-phase fault on Baldwin-Prairie State-2 345 kV at Prairie State	4	Stable, acceptable damping
5*	Three-phase fault on Prairie State GSU Transformer 1	5	Stable, acceptable damping
6*	Three-phase fault on Prairie State GSU Transformer 2	6	Stable, acceptable damping
7*	Single-line-to- ground fault on Common Tower Prairie State-Stallings & Baldwin-Prairie State-1 345 kV at Prairie State	7	Stable, acceptable damping
8*	Single-line-to-ground fault on Common Tower Prairie State-Mt. Vernon & Baldwin-Prairie State-2 345 kV at Prairie State	8	Stable, acceptable damping
9*	Three-phase fault on Prairie State-Mt. Vernon 345 kV at Prairie State with Prairie State-Stallings 345 kV modeled out of service	9	Stable, acceptable damping
10*	Three-phase fault on Baldwin-Prairie State-1 345 kV at Prairie State with Prairie State-Stallings 345 kV modeled out of service	10	Stable, acceptable damping
11*	Three-phase fault on Baldwin-Prairie State-2 345 kV at Prairie State with Prairie State-Stallings 345 kV modeled out of service	11	Stable, acceptable damping
12*	Three-phase fault on Prairie State GSU Transformer 1 with Prairie State-Stallings 345 kV modeled out of service	12	Stable, acceptable damping
13*	Three-phase fault on Prairie State GSU Transformer 2 with Prairie State-Stallings 345 kV modeled out of service	13	Stable, acceptable damping
14*	Three-phase fault on Prairie State-Stallings 345 kV at Prairie State with Prairie State-Mt. Vernon 345 kV modeled out of service	14	Stable, acceptable damping
15*	Three-phase fault on Baldwin-Prairie State-1 345 kV at Prairie State with Prairie State- Mt. Vernon 345 kV modeled out of service	15	Stable, acceptable damping
16*	Three-phase fault on Baldwin-Prairie State-2 345 kV at Prairie State with Prairie State- Mt. Vernon 345 kV modeled out of service	16	Stable, acceptable damping
17*	Three-phase fault on Prairie State GSU Transformer 1 with Prairie State- Mt. Vernon 345 kV modeled out of service	17	Stable, acceptable damping

18*	Three-phase fault on Prairie State GSU Transformer 2 with Prairie State- Mt. Vernon 345 kV modeled out of service	18	Stable, acceptable damping
19*	Three-phase fault on Prairie State-Stallings 345 kV at Prairie State with Baldwin-Prairie State-1 345 kV modeled out of service	19	Stable, acceptable damping
20*	Three-phase fault on Prairie State-Mt. Vernon 345 kV at Prairie State with Baldwin-Prairie State-1 345 kV modeled out of service	20	Stable, acceptable damping
21*	Three-phase fault on Baldwin-Prairie State-2 345 kV at Prairie State with Baldwin-Prairie State-1 345 kV modeled out of service	21	**Stable, poorly damped**
21a* (21+PSS)	Three-phase fault on Baldwin-Prairie State-2 345 kV at Prairie State with Baldwin-Prairie State-1 345 kV modeled out of service	21a	Stable, acceptable damping
22*	Three-phase fault on Prairie State GSU Transformer 1 with Baldwin-Prairie State-1 345 kV modeled out of service	22	Stable, acceptable damping
23*	Three-phase fault on Prairie State GSU Transformer 2 with Baldwin-Prairie State-1 345 kV modeled out of service	23	Stable, acceptable damping
24*	Three-phase fault on Prairie State-Stallings 345 kV at Prairie State with Baldwin-Prairie State-2 345 kV modeled out of service	24	Stable, acceptable damping
25*	Three-phase fault on Prairie State-Mt. Vernon 345 kV at Prairie State with Baldwin-Prairie State-2 345 kV modeled out of service	25	Stable, acceptable damping
26*	Three-phase fault on Baldwin-Prairie State-1 345 kV at Prairie State with Baldwin-Prairie State-2 345 kV modeled out of service	26	**Stable, poorly damped**
26a* (26+PSS)	Three-phase fault on Baldwin-Prairie State-1 345 kV at Prairie State with Baldwin-Prairie State-2 345 kV modeled out of service	26a	Stable, acceptable damping
27*	Three-phase fault on Prairie State GSU Transformer 1 with Baldwin-Prairie State-2 345 kV modeled out of service	27	Stable, acceptable damping
28*	Three-phase fault on Prairie State GSU Transformer 2 with Baldwin-Prairie State-2 345 kV modeled out of service	28	Stable, acceptable damping
29	Three-phase fault on Prairie State-Stallings 345 kV at Prairie State with Baldwin-Cahokia 345 kV line modeled out of service		Stable, acceptable damping
30	Three-phase fault on Prairie State-Mt. Vernon 345 kV at Prairie State with Baldwin-Cahokia 345 kV line modeled out of service		Stable, acceptable damping
31	Three-phase fault on Baldwin-Prairie State-1 345 kV at Prairie State with Baldwin-Cahokia 345 kV line modeled out of service		Stable, acceptable damping
32	Three-phase fault on Baldwin-Prairie State-2 345 kV at Prairie State with Baldwin-Cahokia 345 kV line modeled out of service		Stable, acceptable damping
33	Three-phase fault on Prairie State GSU Transformer 1 with Baldwin-Cahokia 345 kV line modeled out of service		Stable, acceptable damping
34	Three-phase fault on Prairie State GSU Transformer 2 with Baldwin-Cahokia 345 kV line modeled out of service		Stable, acceptable damping
35	Three-phase fault on Prairie State-Stallings 345 kV at Prairie State with Baldwin-Turkey hill 345 kV line modeled out of service		Stable, acceptable damping
36	Three-phase fault on Prairie State-Mt. Vernon 345 kV at Prairie State with Baldwin- Turkey hill 345 kV line modeled out of service		Stable, acceptable damping

37	Three-phase fault on Baldwin-Prairie State-1 345 kV at Prairie State with Baldwin- Turkey hill 345 kV line modeled out of service		Stable, acceptable damping
38	Three-phase fault on Baldwin-Prairie State-2 345 kV at Prairie State with Baldwin- Turkey hill 345 kV line modeled out of service		Stable, acceptable damping
39	Three-phase fault on Prairie State GSU Transformer 1 with Baldwin-Turkey hill 345 kV line modeled out of service		Stable, acceptable damping
40	Three-phase fault on Prairie State GSU Transformer 2 with Baldwin-Turkey hill 345 kV line modeled out of service		Stable, acceptable damping
41	Three-phase fault on Prairie State-Stallings 345 kV at Prairie State with Baldwin-Rush Island 345 kV line modeled out of service		Stable, acceptable damping
42	Three-phase fault on Prairie State-Mt. Vernon 345 kV at Prairie State with Baldwin- Rush Island 345 kV line modeled out of service		Stable, acceptable damping
43	Three-phase fault on Baldwin-Prairie State-1 345 kV at Prairie State with Baldwin- Rush Island 345 kV line modeled out of service		Stable, acceptable damping
44	Three-phase fault on Baldwin-Prairie State-2 345 kV at Prairie State with Baldwin- Rush Island 345 kV line modeled out of service		Stable, acceptable damping
45	Three-phase fault on Prairie State GSU Transformer 1 with Baldwin-Rush Island 345 kV line modeled out of service		Stable, acceptable damping
46	Three-phase fault on Prairie State GSU Transformer 2 with Baldwin-Rush Island 345 kV line modeled out of service		Stable, acceptable damping
47	Three-phase fault on Prairie State-Stallings 345 kV at Prairie State with Baldwin 345/138 kV Transformer modeled out of service		Stable, acceptable damping
48	Three-phase fault on Prairie State-Mt. Vernon 345 kV at Prairie State with Baldwin 345/138 kV Transformer modeled out of service		Stable, acceptable damping
49	Three-phase fault on Baldwin-Prairie State-1 345 kV at Prairie State with Baldwin 345/138 kV Transformer modeled out of service		Stable, acceptable damping
50	Three-phase fault on Baldwin-Prairie State-2 345 kV at Prairie State with Baldwin 345/138 kV Transformer modeled out of service		Stable, acceptable damping
51	Three-phase fault on Prairie State GSU Transformer 1 with Baldwin 345/138 kV Transformer modeled out of service		Stable, acceptable damping
52	Three-phase fault on Prairie State GSU Transformer 2 with Baldwin 345/138 kV Transformer modeled out of service		Stable, acceptable damping
53	Three-phase fault on Prairie State-Stallings 345 kV at Prairie State with Rush Island-Tyson-1 345 kV line modeled out of service		Stable, acceptable damping
54	Three-phase fault on Prairie State-Mt. Vernon 345 kV at Prairie State with Rush Island-Tyson-1 345 kV line modeled out of service		Stable, acceptable damping
55	Three-phase fault on Baldwin-Prairie State-1 345 kV at Prairie State with Rush Island-Tyson-1 345 kV line modeled out of service		Stable, acceptable damping
56	Three-phase fault on Baldwin-Prairie State-2 345 kV at Prairie State with Rush Island-Tyson-1 345 kV line modeled out of service		Stable, acceptable damping
57	Three-phase fault on Prairie State GSU Transformer 1 with Rush Island-Tyson-1 345 kV line modeled out of service		Stable, acceptable damping

58	Three-phase fault on Prairie State GSU Transformer 2 with Rush Island-Tyson-1 345 kV line modeled out of service		Stable, acceptable damping
59	Three-phase fault on Prairie State-Stallings 345 kV at Prairie State with Rush Island-Bailey-2 345 kV line modeled out of service		Stable, acceptable damping
60	Three-phase fault on Prairie State-Mt. Vernon 345 kV at Prairie State with Rush Island- Bailey-2 345 kV line modeled out of service		Stable, acceptable damping
61	Three-phase fault on Baldwin-Prairie State-1 345 kV at Prairie State with Rush Island- Bailey-2 345 kV line modeled out of service		Stable, acceptable damping
62	Three-phase fault on Baldwin-Prairie State-2 345 kV at Prairie State with Rush Island- Bailey-2 345 kV line modeled out of service		Stable, acceptable damping
63	Three-phase fault on Prairie State GSU Transformer 1 with Rush Island- Bailey-2 345 kV line modeled out of service		Stable, acceptable damping
64	Three-phase fault on Prairie State GSU Transformer 2 with Rush Island- Bailey-2 345 kV line modeled out of service		Stable, acceptable damping
65	Three-phase fault on Prairie State-Stallings 345 kV at Prairie State with Rush Island-St. Francois-1 345 kV line modeled out of service		Stable, acceptable damping
66	Three-phase fault on Prairie State-Mt. Vernon 345 kV at Prairie State with Rush Island-St. Francois-1 345 kV line modeled out of service		Stable, acceptable damping
67	Three-phase fault on Baldwin-Prairie State-1 345 kV at Prairie State with Rush Island-St. Francois-1 345 kV line modeled out of service		Stable, acceptable damping
68	Three-phase fault on Baldwin-Prairie State-2 345 kV at Prairie State with Rush Island-St. Francois-1 345 kV line modeled out of service		Stable, acceptable damping
69	Three-phase fault on Prairie State GSU Transformer 1 with Rush Island-St. Francois-1 345 kV line modeled out of service		Stable, acceptable damping
70	Three-phase fault on Prairie State GSU Transformer 2 with Rush Island-St. Francois-1 345 kV line modeled out of service		Stable, acceptable damping
71	Three-phase fault on Prairie State-Stallings 345 kV at Prairie State with Rush Island-St. Francois-2 345 kV line modeled out of service		Stable, acceptable damping
72	Three-phase fault on Prairie State-Mt. Vernon 345 kV at Prairie State with Rush Island-St. Francois-2 345 kV line modeled out of service		Stable, acceptable damping
73	Three-phase fault on Baldwin-Prairie State-1 345 kV at Prairie State with Rush Island-St. Francois-2 345 kV line modeled out of service		Stable, acceptable damping
74	Three-phase fault on Baldwin-Prairie State-2 345 kV at Prairie State with Rush Island-St. Francois-2 345 kV line modeled out of service		Stable, acceptable damping
75	Three-phase fault on Prairie State GSU Transformer 1 with Rush Island-St. Francois-2 345 kV line modeled out of service		Stable, acceptable damping
76	Three-phase fault on Prairie State GSU Transformer 2 with Rush Island-St. Francois-2 345 kV line modeled out of service		Stable, acceptable damping
77*	Double-line-to-ground fault on Prairie State GSU Transformer 1 and Prairie State 345 kV breaker ‘a1’ fails to open	29	Stable, acceptable damping
78*	Double-line-to-ground fault on Prairie State GSU Transformer 1 and Prairie State 345 kV breaker ‘a2’ fails to open	30	Stable, acceptable damping

79*	Double-line-to-ground fault on Prairie State-Stallings 345 kV line and Prairie State 345 kV breaker 'a2' fails to open	31	Stable, acceptable damping
80*	Double-line-to-ground fault on Prairie State-Stallings 345 kV line and Prairie State 345 kV breaker 'a3' fails to open	32	Stable, acceptable damping
81*	Double-line-to-ground fault on Prairie State GSU Transformer 2 and Prairie State 345 kV breaker 'b1' fails to open	33	Stable, acceptable damping
82*	Double-line-to-ground fault on Prairie State GSU Transformer 2 and Prairie State 345 kV breaker 'b2' fails to open	34	Stable, acceptable damping
83*	Double-line-to-ground fault on Baldwin-Prairie State-1 345 kV line and Prairie State 345 kV breaker 'b2' fails to open	35	Stable, acceptable damping
84*	Double-line-to-ground fault on Baldwin-Prairie State-1 345 kV line and Prairie State 345 kV breaker 'b3' fails to open	36	Stable, acceptable damping
85*	Double-line-to-ground fault on Prairie State-Mt. Vernon 345 kV line and Prairie State 345 kV breaker 'c1' fails to open	37	Stable, acceptable damping
86*	Double-line-to-ground fault on Prairie State-Mt. Vernon 345 kV line and Prairie State 345 kV breaker 'c2' fails to open	38	Stable, acceptable damping
87*	Double-line-to-ground fault on Baldwin-Prairie State-2 345 kV line and Prairie State 345 kV breaker 'c2' fails to open	39	Stable, acceptable damping
88*	Double-line-to-ground fault on Baldwin-Prairie State-2 345 kV line and Prairie State 345 kV breaker 'c3' fails to open	40	Stable, acceptable damping

Discussion (Fault at Prairie State 345 kV)

Attachment 1 documents the rotor angle responses of selected units in Ameren, CWLP, SIPC, and TVA areas for Scenarios 1 through 88: Close-in fault at Prairie State 345 kV bus. The responses depicted in the figures indicate that the Units are transiently stable for all the scenarios studied. Results of small-signal stability analysis indicate that the local oscillatory modes have damping ratios in acceptable range (greater than 5.0 %) for most of the studied scenarios. However, for conditions resulting in the loss of Baldwin-Prairie State 1 and 2 345 kV lines (Scenarios 21 & 26), the PSEC Units are found to be poorly damped (Damping less than 5 %). PSS on PSEC Units 1 and 2 would be needed to remedy this situation (Scenarios 21a & 26a). The SSAT program was used for this analysis. Also the damping of PSEC Units 1 and 2 is found to be marginal (~=5%) for some of the other scenarios studied. Although there are no Industry Standards for required damping ratio levels, the literature indicates that a 5.0% or higher damping ratio is appropriate. (See, for example, *Power System Oscillations*, by Graham Rogers, published by Kluwer Academic Publishers, pg. 55.).

Stability of Nearby Plants

Dynegy Baldwin Plant

As the proposed Prairie State plant is to be located electrically near Dynegy Baldwin Plant, several scenarios were studied simulating faults at Baldwin substation cleared in primary clearing time as well as faults cleared in backup clearing time.

The results of simulations performed indicate that the Baldwin units could go unstable for breaker failure conditions at Baldwin 345 kV switchyard. The details of these scenarios are shown in Table 2 below:

Table 2: Baldwin Fault Scenarios

Scenario No.	Contingency Type	Contingency Description	Backup Clearing Time	Stability Assessment
1	Backup Clearing	Double-line-to-ground fault on Baldwin GSU transformer 2 and Baldwin 345 kV breaker '4572' fails to open	13	**Unstable**
1a	Backup Clearing	Double-line-to-ground fault on Baldwin GSU transformer 2 and Baldwin 345 kV breaker '4572' fails to open	12	Stable
2	Backup Clearing	Double-line-to-ground fault on Baldwin GSU transformer 3 and Baldwin 345 kV breaker '4584' fails to open	13	**Unstable**
2a	Backup Clearing	Double-line-to-ground fault on Baldwin GSU transformer 3 and Baldwin 345 kV breaker '4584' fails to open	12	Stable

Attachment 2 documents the rotor angle responses of selected units in Ameren, CWLP, SIPC, and TVA areas for Scenarios 1 and 2: Double-line-to-ground fault at Baldwin on GSU transformer with Baldwin 345 kV breaker failure. The Baldwin Units were found to be unstable in Scenarios 1 and 2. Backup clearing time reduction, if can be implemented reliably, is an effective option to remedy this unstable condition. The critical clearing time for this condition is found to be 12 cycles (Scenarios 1a and 2a) compared to the existing clearing time of 13 cycles. The System Protection group at Ameren has indicated that the breaker failure relays at Baldwin could be replaced with faster relays to achieve the clearing time required. The damping of Baldwin Units 1, 2, and 3 for the scenarios studied is found to be in acceptable range (greater than 3%).

AmerenUE Rush Island Plant

As the proposed Prairie State plant is to be located electrically near AmerenUE Rush Island Plant, several scenarios were studied simulating faults at Rush Island substation cleared in primary clearing time as well as faults cleared in backup clearing time.

The results of simulations performed indicate no appreciable degradation of transient stability at Rush Island plant. The damping of Rush Island Units 1 and 2 for the scenarios studied is found to be in acceptable range (greater than 3%). However, the damping of Rush Island Unit 3 (MISO AM08 project) is found to be poorly damped for conditions resulting in outage of two outlet lines at Rush Island. The Rush Island Unit 3 is a proposed unit with in-service date

of 2009. The manufacturer supplied typical excitation system parameters of this unit were used in the study. Ameren requires that the excitation system of this unit be tested to get proper modeling information. At that time, the need for the power system stabilizer on Rush Island Unit 3 should be reassessed to confirm the impact of G495.

Ad Hoc Group Scenarios

The following scenarios were submitted by the Ad Hoc Group to evaluate the impact of G495 on their system.

SIPC

Table 2: SIPC Scenario Summary

Scenario No.	Contingency Description	Stability Assessment
1	Fault on double circuit Franklin-West Frankfort 138 kV & Franklin-Marion 69 kV	Stable
2	Loss of Renshaw 161 kV substation	Stable

Discussion (SIPC Scenarios)

Attachment 3 documents the rotor angle responses of selected units in Ameren, CWLP, SIPC, and TVA areas for Scenarios 1 and 2. The responses depicted in the figures indicate that the Units are transiently stable and the damping of the units is found to be in acceptable range for all the scenarios studied.

TVA

Table 3: TVA Scenario Summary

Scenario No.	Contingency Description	Stability Assessment
1	Three Phase fault on Shawnee 500/161 kV Transformer with Shawnee-Marshall 500 kV modeled out of service	Stable
2	Three Phase fault on Shawnee-McCrack 161 kV line with Shawnee 500/161 kV Transformer modeled out of service	Stable

Discussion (TVA Scenarios)

Attachment 3 documents the rotor angle responses of selected units in Ameren, CWLP, SIPC, and TVA areas for Scenarios 1 and 2. The responses depicted in the figures indicate that the Units are transiently stable and the damping of the units is found to be in acceptable range for all the scenarios studied.

Conclusions

These studies have been performed with the best presently available information that Ameren has been given from Midwest ISO in terms of the connection configuration shown in Appendix A and in terms of dynamic models and their associated parameters as delineated in Appendix B. Should the connection configuration not represent the actual, and/or the models not reflect the functionality of the actual equipment and controls, and/or their parameters not reflect actual control settings, the results of such studies may not be meaningful.

Based on the PE PSEC configuration, dynamic models and their data parameters, there is no appreciable degradation of transient stability due to IP14 plus G495. However, to maintain stability of the Dynegy Baldwin Units, for two of the studied scenarios, backup clearing time reduction, if can be implemented reliably, is required. The System Protection group at Ameren has indicated that the required critical clearing time can be achieved by replacing the relays at Baldwin switchyard. Also, the local modes of PSEC machines were found to be poorly damped for some of the scenarios studied. These scenarios include fault conditions at Prairie State 345 kV bus. The poorly damped responses of machines at PSEC require correction.

Use of modern DeltaP/Omega power system stabilizers (PSS) on the excitation systems of the Prairie State machines showed improvement in the simulation results (Scenarios 21a and 26a) and must be implemented. Prior to installing PSS, excitation system testing must be performed to verify excitation system models and their parameters. The PSS model parameters used in this study, however, were not necessarily intended to be optimal, and they are not, but good enough for the purpose of this PSS feasibility study. Developing optimized tunable parameters for the specific PSS application are beyond the scope of this particular study.

The damping of Dynegy Baldwin Units 1, 2, and 3, for the scenarios studied, is deemed acceptable based on the field tested data provided by Dynegy. The damping of AmerenUE Rush Island Units 1 and 2 for the scenarios studied is found to be in acceptable range. However, the damping of Rush Island Unit 3 (MISO AM08 project) is found to be poorly damped for conditions resulting in outage of two outlet lines at Rush Island. The Rush Island Unit 3 is a proposed unit with in-service date of 2009. The manufacturer supplied typical excitation system parameters of this unit were used in the study. Ameren requires that the excitation system of this unit be tested to get proper modeling information. At that time, the need for the power system stabilizer on Rush Island Unit 3 should be reassessed to confirm the impact of G495.

Proper application of a PSS depends on detailed knowledge of several items. The most important of these items include accurate model and model parameters for the generator, the generator excitation system, and the power system stabilizer, itself. Manufacturer supplied "typical data" and or design data are, in general, not adequate. Experience has shown that the only way to develop useful models and their data is to actually field test these devices. Field testing also has the benefit of discovering functionality problems that can be inherent in the design, manufacture, and installation of control equipment such as excitation systems and PSS.

Also, the proper power system stabilizer applications requires extensive analytical studies that require the use of highly specialized analysis tools, in particular small-signal analysis software tools, such as those used to conduct this study. Seat-of-the-pants tuning (i.e., PSS tuning without analytical backup) of a power system stabilizers can create situations that are worse than having no stabilizers at all, and is, therefore, unacceptable.

The results of the simulations performed for scenarios submitted by the Ad Hoc group indicate no appreciable degradation of transient stability due to IP14 plus G495.

Peabody Energy should verify that out-of-step protection is incorporated in their generation protection schemes. There may be conditions other than those studied here that could impact the stability of the PSEC plant.

Appendix A
G495 Proposed Connection Configuration

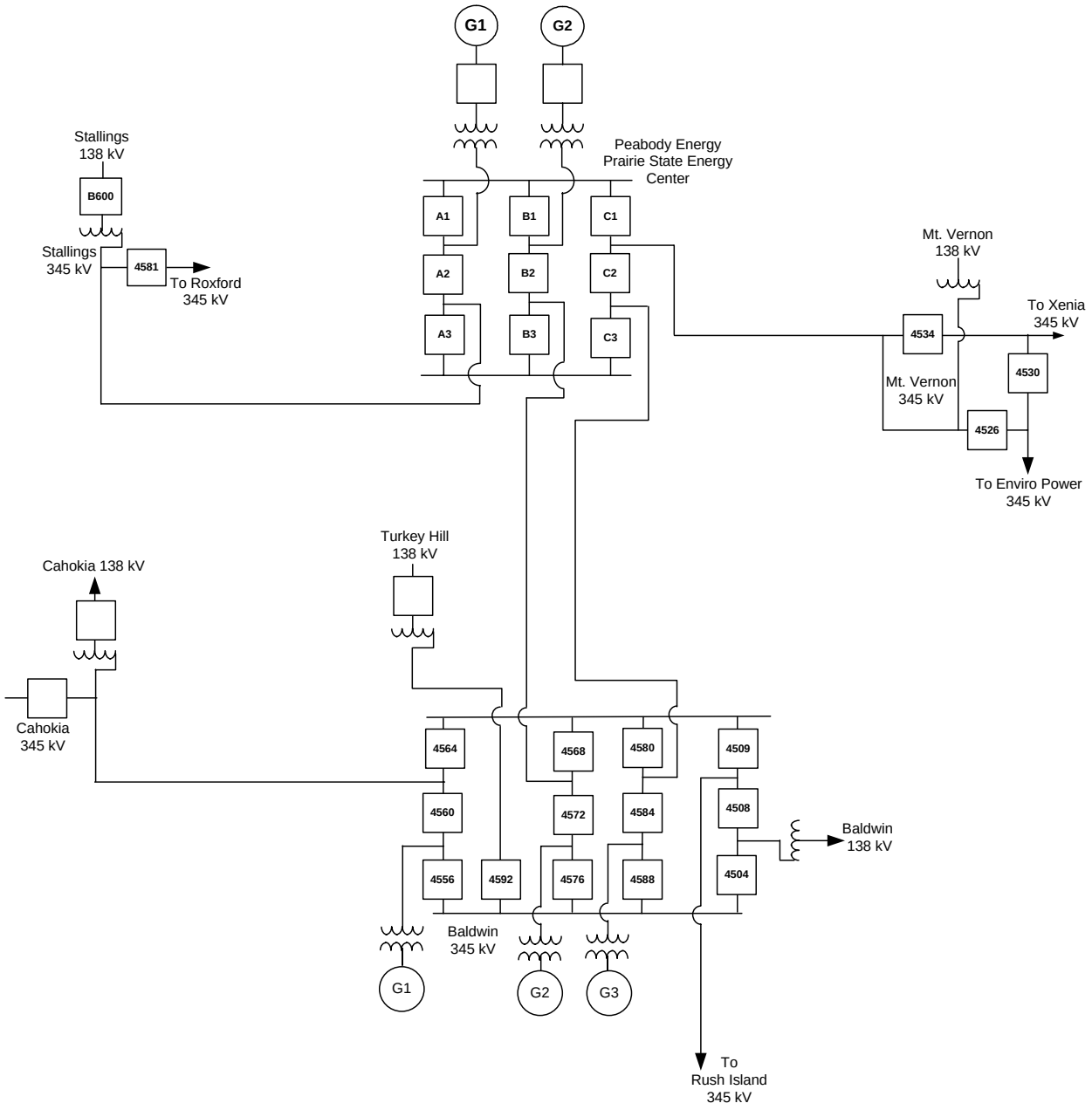
G1
G2
Peabody Energy
Prairie State Energy
Center
Stallings
138 kV
B600
Stallings
345 kV
4581
To Roxford
345 kV
A1
B1
C1
A2
B2
C2
A3
B3
C3
Mt. Vernon
138 kV
To Xenia
345 kV
4534
4530
Mt. Vernon
345 kV
4526
To Enviro Power
345 kV
Turkey Hill
138 kV
Cahokia 138 kV
Cahokia
345 kV
4564
4568
4580
4509
4560
4572
4584
4508
Baldwin
138 kV
4556
4592
4576
4588
4504
Baldwin
345 kV
G1
G2
G3
To
Rush Island
345 kV

Appendix B
Listing of G495 Dynamic Modeling data

```
REPORT FOR ALL MODELS                        BUS 32760 [WC2 G1  25.000] MODELS


** GENROU **  BUS X-- NAME --X BASEKV MC    C O N S     S T A T E S
            32760     WC2 G1   25.000 1   36869-36882   15909-15914

            MBASE     Z S O R C E         X T R A N       GENTAP
           1055.0  0.00330+J 0.22000  0.00000+J 0.00000  1.00000

 T'D0 T''D0  T'Q0 T''Q0     H   DAMP   XD     XQ     X'D    X'Q   X''D    XL
 6.90 0.050  1.00 0.080   2.57  0.00 2.1600 2.0000 0.2900 0.4400 0.2200 0.1400

                              S(1.0)  S(1.2)
                              0.0810  0.5610

** ESST1A **  BUS X-- NAME --X BASEKV MC    C O N S     S T A T E S    I C O N S
            32760     WC2 G1   25.000 1  130169-130186  56346-56350    4891-4892

   UEL VOS     TR    VIMAX   VIMIN     TC      TB     TC1     TB1     KA
    2   1    0.020   0.018  -0.015   2.000  10.000   0.100   0.100  300.0

    TA    VAMAX   VAMIN   VRMAX   VRMIN    KC     KF     TF    KLR    ILR
  0.004   5.530  -4.700   5.530  -4.700  0.000  0.000  0.100 20.000  5.050


** IEEEG1 **  BUS X-- NAME --X BASEKV MC    C O N S     S T A T E S     V A R S
            32760 WC2 G1       25.000 1  198011-198030  77503-77508   10072-10073

     K      T1      T2      T3     UO      UC    PMAX   PMIN     T4      K1
  20.00   0.000   0.000   0.100  0.100  -0.333 1.0700 0.0000   0.466   0.327

   K2      T5      K3      K4      T6      K5      K6      T7      K7      K8
 0.000   9.000   0.314   0.000   0.443   0.359   0.000   0.000   0.000   0.000

REPORT FOR ALL MODELS                        BUS 32761 [WC2 G2  25.000] MODELS


** GENROU **  BUS X-- NAME --X BASEKV MC    C O N S     S T A T E S
            32761     WC2 G2   25.000 2   36883-36896   15915-15920

            MBASE     Z S O R C E         X T R A N       GENTAP
           1055.0  0.00330+J 0.22000  0.00000+J 0.00000  1.00000

 T'D0 T''D0  T'Q0 T''Q0     H   DAMP   XD     XQ     X'D    X'Q   X''D    XL
 6.90 0.050  1.00 0.080   2.57  0.00 2.1600 2.0000 0.2900 0.4400 0.2200 0.1400

                              S(1.0)  S(1.2)
                              0.0810  0.5610

** ESST1A **  BUS X-- NAME --X BASEKV MC    C O N S     S T A T E S    I C O N S
            32761     WC2 G2   25.000 2  130187-130204  56351-56355    4893-4894

   UEL VOS     TR    VIMAX   VIMIN     TC      TB     TC1     TB1     KA
    2   1    0.020   0.018  -0.015   2.000  10.000   0.100   0.100  300.0

    TA    VAMAX   VAMIN   VRMAX   VRMIN    KC     KF     TF    KLR    ILR
  0.004   5.530  -4.700   5.530  -4.700  0.000  0.000  0.100 20.000  5.050


** IEEEG1 **  BUS X-- NAME --X BASEKV MC    C O N S     S T A T E S     V A R S
            32761 WC2 G2       25.000 2  198031-198050  77509-77514   10074-10075

     K      T1      T2      T3     UO      UC    PMAX   PMIN     T4      K1
  20.00   0.000   0.000   0.100  0.100  -0.333 1.0700 0.0000   0.466   0.327

   K2      T5      K3      K4      T6      K5      K6      T7      K7      K8
 0.000   9.000   0.314   0.000   0.443   0.359   0.000   0.000   0.000   0.000
```

Project G495 Short Circuit Assessment
Prairie State Energy Center

Prepared for Midwest ISO

MISO LGIP Queue # 38393-01

Ameren Services
Energy Delivery Technical Services
Electric Planning
Transmission & Interconnections
January, 2006

Summary

This report presents results of the short circuit assessment of Peabody Energy (PE) Prairie State Energy Center (PSEC) connection of proposed 2110 MVA generation (2-1055 MVA generators) at the new Prairie State 345 kV station in Washington County, IL. This project is Midwest ISO (MISO) project number G495.

As the MISO project G495 is an upgrade to the proposed generation addition project MISO IP14 and the generator and GSU transformer data for IP14 project changed since the study was last performed, a short circuit assessment was performed to verify IP14 results. The assessment indicated that that in addition to two Labadie 345 kV breakers (7H and 17H) that were identified as overstressed in the IP14 study performed by Ameren in 2003, two other Labadie 345 kV breakers (11H and 23H) were found to be overstressed because of IP14/G495 project. This change can be attributed to the change in the machine as well as the GSU transformer data for project IP14/G495. The Labadie 345 kV breakers (11H and 23H) have been identified as being overstressed with the MISO AM08 project, which is ahead of G495 in MISO queue but behind IP14. These breakers were now found to be overstressed with MISO IP14 prior to MISO AM08. The addition of MISO project AM08 would result in overstress of two Rush Island 345 kV circuit breakers and two Labadie 345 kV circuit breakers. A total of six Labadie 345 kV breakers and two Rush Island 345 kV breakers have to be replaced prior to MISO project G495 synchronization. Without MISO AM08, a total of four Labadie 345 kV breakers have to be replaced prior to MISO G495 synchronization.

The fault current levels without any voltage or AC/DC adjustments at the generator terminals of G495 project for three phase and single phase faults would be about 226 kA and 228 kA, respectively. These values are provided for information purposes only.

MISO should work with other transmission provider(s) in the area to determine the impact of this generation connection on those systems from a short-circuit perspective as we as we do not have information regarding the interrupting capabilities and replacement criteria for the neighboring transmission provider (s) circuit breakers.

This study has been performed with the best presently available information that Ameren has been given by Midwest ISO. Should the models not reflect the functionality of the actual equipment and controls, and/or their parameters not reflect actual control settings, the results of such studies may not be meaningful and the study may have to be re-performed.

Assumptions

A short circuit model representing expected system conditions for 2009 summer and including previously committed generation facilities connected to the Ameren system in East Central Missouri and Southern Illinois was used as the basis for this analysis.

The following previously committed generation facilities were considered:

1. AmerenUE-Rush Island Unit 3 (MISO AM08)

2. Enviro Power-Franklin County Facility (MISO IP17)
3. AmerenUE-Venice CTG 5 (MISO G478)
4. Navitas Energy-Coles County Wind Farm (MISO AM05)

The project G495 was modeled as shown in Appendix A. The connection impedances used in the G495 modeling are included in Appendix B. System reinforcements in the area to facilitate transmission service or other reasons, if any, were not included in the model. The short circuit model was tested with and without the original MISO IP14 project and with MISO G495 project to determine the impact on the Ameren and surrounding system fault levels. If any information provided for this study would change, then the short-circuit assessment would need to be reviewed.

Study Results

A comparison of the bus fault levels, before and after the MISO IP14 and with MISO G495 is shown in Table 1. Although circuit breaker duties in the East Central Missouri and Southern Illinois area of the Ameren transmission system would be increased, the resultant short-circuit interrupting requirements would generally remain within the interrupting capabilities of the Ameren circuit breakers. As indicated in the table, the biggest changes to the existing bus fault levels would be experienced at the Baldwin 345 kV bus where the three-phase fault level would be increased by approximately 45.7% and the single-phase fault level would be increased by approximately 40.3%. The Baldwin 345 kV breakers were identified as overstressed in the original IP14 study performed by Illinois Power (now AmerenIP) in 2003. These breakers are proposed to be replaced by January 31, 2009 with 63 kA breakers. The breaker duties at this station after the replacement will be below their respective interrupting capabilities for three-phase faults (66%), and single phase faults (76%).

The fault levels and breaker duties at other Ameren EHV buses were also reviewed. The three-phase fault level and single phase fault level changes because of MISO IP14 (G495) at various 345 kV buses is shown in Table 1. Although most of the breaker duties at these stations would still be below their respective interrupting capabilities for three-phase faults (38-93%), the 345 kV, 41 kA circuit breakers at Labadie that connect the Labadie-Tyson-1 345 kV, Labadie-Tyson-2 345 kV, Mason-Labadie-3 345 kV, and Mason-Labadie-4 345 kV lines would have single-phase breaker duties of 100-102% of rated capability after the MISO IP14/G495 generation connection. The Labadie 345 kV breakers on Mason-Labadie-3 345 kV and Mason-Labadie-4 345 kV were identified as overstressed in the original IP14 study performed by Ameren in 2003. The results of the assessment indicates that change of project G495 project data (machine & GSU transformer) resulted in overstress of two additional Labadie 345 kV breakers (13H and 23H). These four Labadie circuit breakers (breakers 7H, 13H, 17H, and 23H) would require replacement prior to MISO G495 unit synchronization, assuming G495 goes in-service prior to AM08; otherwise, replacement of other breakers at Labadie and at Rush Island switchyards need to be coordinated with AM08 project.

The fault levels and breaker duties at Ameren 138 kV buses was also reviewed as shown in Table 1. The three-phase fault level and single phase fault level changes because of MISO

IP14 (G495) at various 138 kV buses is shown in Table 1. Although the breaker duties at the 138 kV stations studied would be below their respective interrupting capabilities for three-phase faults, six 138 kV breakers at Tyson (Tyson-Arnold-3 138 kV, Conway-Tyson-3 138 kV, Marshall-Tyson-2 138 kV, Conway-Tyson-4 138 kV, Tyson-Meramec-4 138 kV, and Marshall-Tyson-1 138 kV) were found to have interrupting capabilities of 95-99%. Similarly two 138 kV breakers at Meramec (Common Transformer A, and Common Transformer C) are found to have single-phase fault interrupting capabilities of 96%. This data is provided for information purposes only and any system modifications in the area prior to G495 may impact the duties of these breakers and the study may have to be re-performed.

Changes to the fault levels on surrounding area systems were also briefly reviewed based on the modeling information we have for these systems. Based on the information we have, some of these fault levels showed an increase up to 5.1% as a result of the proposed generation connection. The three-phase fault levels at Essex 345 kV, New Madrid 345 kV, Shawnee 345 kV, Baldwin 138 kV, and Dallman 138 kV buses would be increased by approximately 0.6%, 0.2%, 0.5%, 5.1%, and 0.03% respectively, and the single-phase fault levels at these stations would be increased by 0.3%, 0.2%, 0.4%, 3.2%, and 0.02%, respectively, because of MISO G495 project. However, we cannot determine if circuit breakers outside of Ameren would be overstressed and would require replacement, as we do not have information regarding the interrupting capabilities and replacement criteria for these circuit breakers. MISO should work with other transmission providers or generation owners in the area to determine the impact of this generation connection on their transmission systems from a short-circuit perspective.

The fault current levels without any voltage or AC/DC adjustments at the generator terminals of G495 project for three phase and single phase faults would be about 226 kA and 228 kA, respectively. These values are provided for information purposes only.

Table 1
Comparison of Bus Fault Levels

Bus Name	Voltage (kV)	W/O IP 14 GEN		W/ IP 14 GEN		Percent Change		W/ G495 GEN	
		Three Phase Fault (Amperes)	Line-to-Ground Fault (Amperes)	Three Phase Fault (Amperes)	Line-to-Ground Fault (Amperes)	Three Phase Fault	Line-to-Ground Fault	Three Phase Fault (Amperes)	Line-to-Ground Fault (Amperes)
Baldwin	345	25801	30960	37592	43423	45.7	40.3	38514	44188
Cahokia	345	22846	19408	24113	19993	5.5	3.0	24355	20136
E W Frankfort	345	12207	11029	12471	11166	2.2	1.2	13315	11935
Kelso	345	12892	9943	12995	9986	0.8	0.4	13068	10017
Labadie	345	35338	38490	36140	39087	2.3	1.6	36589	39373
Lutesville	345	13616	9613	13816	9680	1.5	0.7	13913	3713
Mason	345	27288	19941	27594	20015	1.1	0.4	27803	20036
Mt. Vernon	345	15238	12341	16555	12855	8.6	4.2	18464	14733
Newton	345	21563	24551	21685	24653	0.6	0.4	21834	24789
Prairie State	345	N/A	N/A	33701	36316	N/A	N/A	34420	36834
Roxford	345	28611	24286	29753	24786	4.0	2.1	29992	24854
Rush Island	345	22241	24519	30228	31543	35.9	28.6	35039	38412
Sioux	345	26646	21618	26986	21729	1.3	0.5	27123	21744
Stallings	345	21312	17586	22232	17916	4.3	1.9	22350	17928
St. Francois	345	18700	15832	22194	17533	18.7	10.7	23907	18665
Tyson	345	25985	18083	28181	18763	8.5	3.8	29271	19107
Xenia	345	14539	10611	14793	10682	1.7	0.7	15121	10917
Baldwin	138	19581	20599	20694	21440	5.7	4.1	20700	21409
Bailey	138	22036	18605	22964	19078	4.2	2.5	23274	19320
Cahokia 1 & 2	138	46101	39696	46794	39977	1.5	0.7	47375	40306

Cahokia 3 & 4	138	35931	25004	41985	35814	16.8	43.2	42289	35980
Campbell	138	37869	30174	38406	30339	1.4	0.5	41935	33709
Central	138	32340	20772	32530	20763	0.6	0.0	32638	20720
E Belleville	138	14620	13270	14911	13383	2.0	0.8	14941	13371
Gray Summit	138	22808	22156	22919	22203	0.5	0.2	22920	22163
Laclede Steel	138	37191	39342	37484	39551	0.8	0.5	37865	39812
Marshall	138	45250	26623	45787	26698	1.2	0.3	46105	26686
Meramec 1 & 4	138	34869	34100	35157	34270	0.8	0.5	35337	34346
Meramec 2 & 3	138	33973	33675	34161	33766	0.6	0.3	34237	33749
Mason 1 & 2	138	50225	37843	50663	37946	0.9	0.3	50928	37948
Mason 3	138	32805	26014	32934	26028	0.4	0.1	32980	25983
Mt. Vernon	138	17529	18476	17787	18636	1.5	0.9	18114	19064
Mt Vernon 42nd ST	138	11953	11332	12037	11359	0.7	0.2	12162	11456
Ridge	138	35931	25004	36303	25055	1.0	0.2	36600	25202
Roxford	138	39240	37152	39537	37294	0.8	0.4	39580	37270
S Belleville	138	17419	16922	17967	17217	3.1	1.7	18021	17218
S Centralia	138	7478	6410	7482	6399	0.1	-0.2	7494	6399
Salem W	138	8725	7959	8730	7953	0.1	-0.1	8740	7956
St. Francois	138	34264	28110	36525	29234	6.2	3.8	37418	29956
Stallings	138	28702	27421	29105	27597	1.4	0.6	29112	27542
Turkey Hill	138	22564	21442	23541	21984	4.2	2.5	23557	21944
Tyson	138	52507	37375	54162	37916	3.1	1.4	55009	38198
Venice	138	39862	32793	40468	33003	1.5	0.6	47833	44729
Watson	138	29670	19535	29778	19527	0.4	0.0	29832	19479

Wildwood	138	29956	30618	30130	30708	0.6	0.3	30177	30688
Wood River	138	37219	39374	37513	39584	0.8	0.5	37895	39845
W Frankfort E	138	21451	22277	21619	22384	0.8	0.5	22068	22836
Prairie State (generator terminals)	25	N/A	N/A	224186	227105	N/A	N/A	225617	227926
Essex (AECI)	345	13774	11326	13852	11361	0.6	0.3	13887	11374
Enviro (IPP)	345	N/A	N/A	N/A	N/A	N/A	N/A	16120	13445
New Madrid (AECI)	345	21155	22657	21199	22691	0.2	0.1	21221	22706
Shawnee (TVA)	345	15288	15020	15364	15076	0.5	0.4	15559	15223
Baldwin (SIPC)	138	17778	17159	18691	17713	4.9	3.1	18725	17702
Dallman (CWLP)	138	19198	21288	19204	21295	0.03	0.03	19207	21298

Notes

1. Fault levels provided in the table are based on 1.0 p.u. bus voltages without adjustment for AC and DC decrements.

2. Buses are in Ameren control area unless otherwise noted.

Appendix A
Proposed G495 Configuration

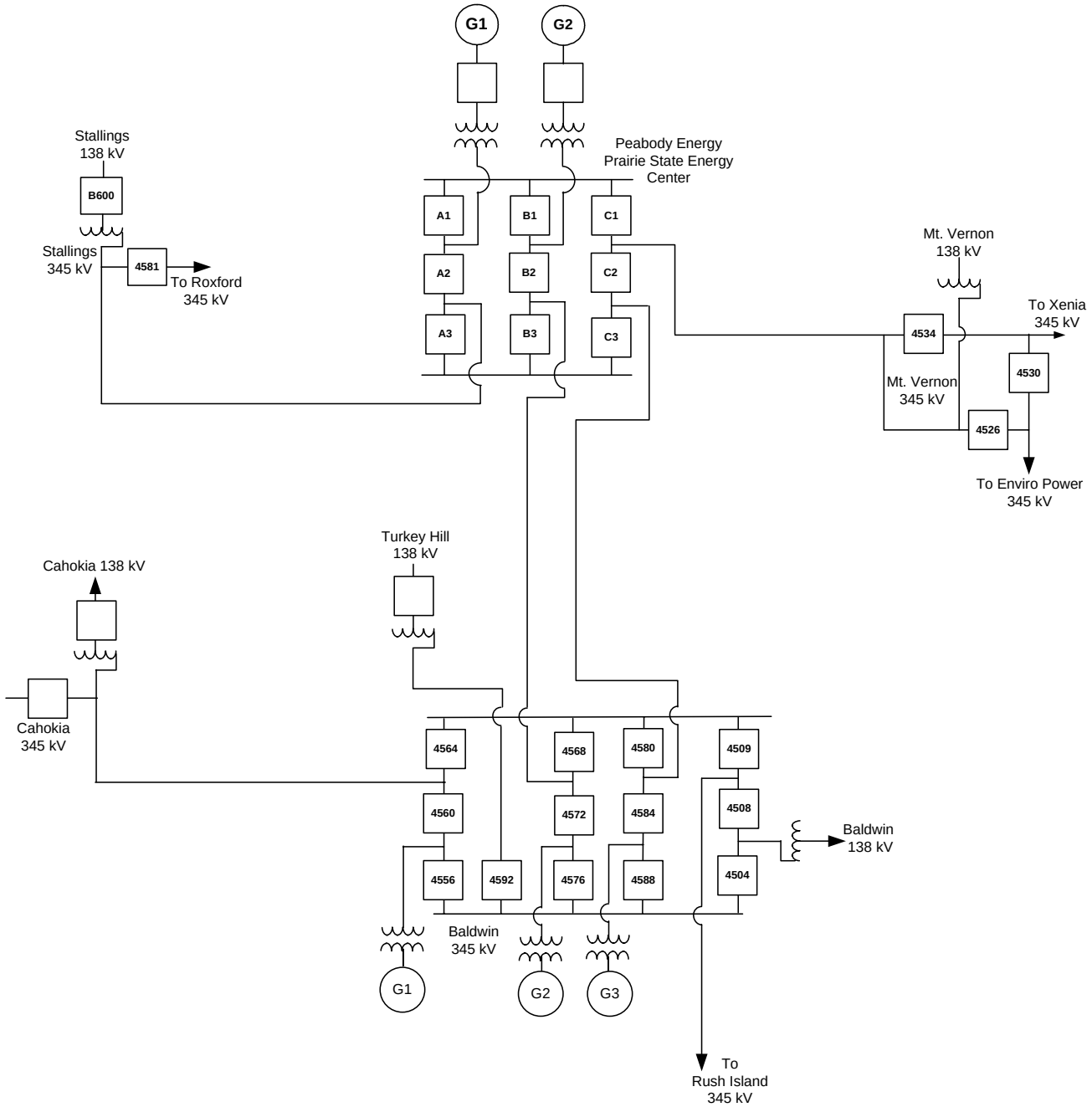
G1
G2
Stallings
138 kV
B600
Stallings
345 kV
4581
To Roxford
345 kV
Peabody Energy
Prairie State Energy
Center
A1
B1
C1
A2
B2
C2
A3
B3
C3
Mt. Vernon
138 kV
To Xenia
345 kV
4534
4530
Mt. Vernon
345 kV
4526
To Enviro Power
345 kV
Turkey Hill
138 kV
Cahokia 138 kV
Cahokia
345 kV
4564
4568
4580
4509
4560
4572
4584
4508
Baldwin
138 kV
4556
4592
4576
4588
4504
Baldwin
345 kV
G1
G2
G3
To
Rush Island
345 kV

Appendix B
Connection Impedances in the G495 Study

```
     PTI INTERACTIVE POWER SYSTEM SIMULATOR--PSS/E      THU, OCT 27 2005  14:19
G495                                                                  BUS DATA

 BUS# COD ZER SEQ SHUNT NEG SEQ SHUNT POS SEQ SHUNT    MVA-LOAD    CURRENT-LOAD     Y-LOAD
98101  1  0.000   0.000  0.000  0.000  0.000  0.000
98102  2  0.000   0.000  0.000  0.000  0.000  0.000
98103  2  0.000   0.000  0.000  0.000  0.000  0.000

     PTI INTERACTIVE POWER SYSTEM SIMULATOR--PSS/E      THU, OCT 27 2005  14:19
G495                                                                GENERATOR
                                                                    UNIT DATA
 BUS#  ID   ZGEN (ZERO)    ZGEN (POS.)    ZGEN (NEG.) MBASE   X T R A N   GENTAP
98102  1  0.0830 0.0970  0.0033 0.2400  0.0590 0.1800  1055 0.0000 0.0000 1.0000
98103  2  0.0830 0.0970  0.0033 0.2400  0.0590 0.1800  1055 0.0000 0.0000 1.0000


     PTI INTERACTIVE POWER SYSTEM SIMULATOR--PSS/E      THU, OCT 27 2005  14:19
G495                                                               BRANCH DATA

                                     Z    S X-- POS AND NEG SEQ --X X--- ZERO SEQUENCE ---X
X--- FROM BUS ---X X---- TO BUS ----X CKT T    R       X       B       R       X       B
  815 MT VERNO 345 98101 PRAIR ST 345  1  1  0.0014  0.0201  0.0000  0.0232  0.0734  0.0000
15242 810BALDW 345 98101 PRAIR ST 345  1  1  0.0005  0.0063  0.0000  0.0054  0.0228  0.0000
15242 810BALDW 345 98101 PRAIR ST 345  2  1  0.0005  0.0066  0.0000  0.0054  0.0228  0.0000
15880 STALLING 345 98101 PRAIR ST 345  1  1  0.0017  0.0234  0.0000  0.0226  0.0702  0.0000

     PTI INTERACTIVE POWER SYSTEM SIMULATOR--PSS/E      THU, OCT 27 2005  14:19
G495                                                            TWO-WINDING
                                                              TRANSFORMER DATA
                                          S W C X-- POS & NEG --X X--------- ZERO SEQUENCE ---------X
X--- FROM BUS ---X X---- TO BUS ----X CKT T 1 C     R        X        R        X     RGROUND  XGROUND
98101 PRAIR ST 345 98102 PEABOD 125.0  1  1 F 2  0.00013  0.01232  0.00013  0.01232  0.00000  0.00000
98101 PRAIR ST 345 98103 PEABOD 225.0  1  1 F 2  0.00013  0.01232  0.00013  0.01232  0.00000  0.00000
```