Grade Crossing Location Record

Cabinet Number (Option 90) 4044

Location ST. MARY'S ROAD Milepost 63.33 DOT 260 489R Date 10 / 21 / 2000

Operating Program HPN _____ Version 32.0

System Monitor Program HPN _____ Version 20.2

Hardware Settings

Track 1 Master ☒ Slave ☐ 4 kHz ☐ 8 kHz ☒
LOS jumper 0 ☐ 1 ☒ 2 ☐ Fault jumper 0 ☐ 1 ☒
Appoach configuration switch position: Normal ☒ Short ☐ Very Short ☐

Track 2 Master ☐ Slave ☐ 4 kHz ☐ 8 kHz ☐
LOS jumper 0 ☐ 1 ☐ 2 ☐ Fault jumper 0 ☐ 1 ☐
Appoach configuration switch position: Normal ☐ Short ☐ Very Short ☐

Adjust Select Adjustments

No.	Adjustment	Default	Range	Track 1	Track 2
1	Approach Length	9,999	0 - 9,999	2183 feet	feet
2	Warning Time	99	23 - 99	25 seconds	seconds
3	LIA	0	-9 to +9	0 steps	steps
4	TC (1 step = 32)	0	430 - 470	1 steps	steps
5	MD Restart	99%	0 - 99%	0 RX	RX

Option Adjustments

No.	Adjustment	Default	Range	Track 1	Track 2
1	TK-ENA	UP	UP or dn	UP ☒ dn ☐	UP ☐ dn ☒
2	TK FO	0	0 - 9999	560 Hz STRAP	STRAP
3	CW/MD	d	C to d	C ☒ d ☐	C ☐ d ☐
4	UNI-BI	b	U - b	U ☐ b ☒	U ☐ b ☐
5	NBS-C	0	0 - 99	96 RX	RX
		9,999	RX dependant	2273 feet	feet
6	CWEWT	80	0 - 99	80 seconds	seconds
7	LOS	16	4 - 99	16 seconds	seconds
8	IJ-LOS	5	3 - 99	5 seconds	seconds
9	BC	frequency dependant	50 -250	148	
10	P-COMP	0	0 - 10	0 degrees	degrees

HXP-3, HXP-3R, HXP-3R2

AX Adjustment Options **(NO AX RELAY DRIVE IS USED)**

	Default	Range	Option 11 - AX1	Option 12 - AX2	Option 13 - AX3
TK-ASN		1, 2, Both	1 ☐ 2 ☐ Both ☐	1 ☐ 2 ☐ Both ☐	1 ☐ 2 ☐ Both ☐
OF-TK1	0	0 - 9,999	feet	feet	feet
OF-TK2	0	0 - 9,999	feet	feet	feet
WT	99	23 - 99	seconds	seconds	seconds
MD-RST	99	0 - 99%	RX	RX	RX
CW/MD	d	C or d	C ☐ d ☐	C ☐ d ☐	C ☐ d ☐
CJ-LOS	0	3 - 99	seconds	seconds	seconds
PJ-DET	15	4 - 15	seconds	seconds	seconds
POS-ST	dn	UP or dn	UP ☐ dn ☐	UP ☐ dn ☐	UP ☐ dn ☐

No.	Adjustment	Default	Range	Track 1	Track 2
17	MDR-AX	n*	n or A	n ☒ A ☐	n ☐ A ☐
	OF-TK1	0	0 - 9,999	feet	
	OF-TK2	0	0 - 9,999		feet
	CJ-LOS	0	3 - 99	seconds	seconds
	PJ-DET	15	4 - 15	seconds	seconds
18	MD-TMR	10	10-99 (0=disable)	10 minutes	minutes
19	MIN-WT	0	23-99 (0=disable)	0 seconds	seconds
20	FS-DET	0	10-30 (0=disable)	0 minutes	minutes
21	POS-RX	0	0 - 74 (0=disable)	0 RX	RX
	POS-TM	0	0 - 99**	0 minutes	0 minutes
47	ATO-RX	dn	UP or dn	UP ☒ dn ☐	UP ☐ dn ☐
48	PF-ENA	UP	UP or dn	UP ☒ dn ☐	UP ☐ dn ☐

***n = not an AX drive (no options available)**
****0 = disable, 99 = continuous**

Shunt Record

		No Shunt		100% Shunt		50% Shunt			LIA Added
East Approach		RX	Phase	RX	Phase		RX	Phase	±1 to 9
Track 1	Normal	100	74	93	75		46	77	0
	Standby	99	74						
Track 2	Normal								
	Standby								
West Approach									
Track 1	Normal	100	74	96	75		49	78	0
	Standby	99	74						
Track 2	Normal								
	Standby								

This drawing was created using CADD. All field and office changes are to be routed through Main Office in East Joliet. DO NOT make changes to this original copy without notifying the Engineer Signals, Communications & Electrical

NO	DESCRIPTION	BY	CHK'D	DATE
8				
7				
6				
5				
4				
3				
2				
1				
	AS IN SERVICE 10/30/2000 PW ABF			

REVISIONS

ELGIN, JOLIET & EASTERN RAILWAY COMPANY

HXP SETUP SHEET
ST. MARY'S ROAD
LIBERTYVILLE, ILLINOIS

ENGINEERING SERVICES
JOLIET, IL 60432
SCALE NONE
CHECKED BY JJ
IN CHARGE OF JJ
DRAWN BY B-H
DATE 10/31/00
CAD ID [illegible]

FILE NO. 260 489R SHEET NO. 3 CONT'D ON 4

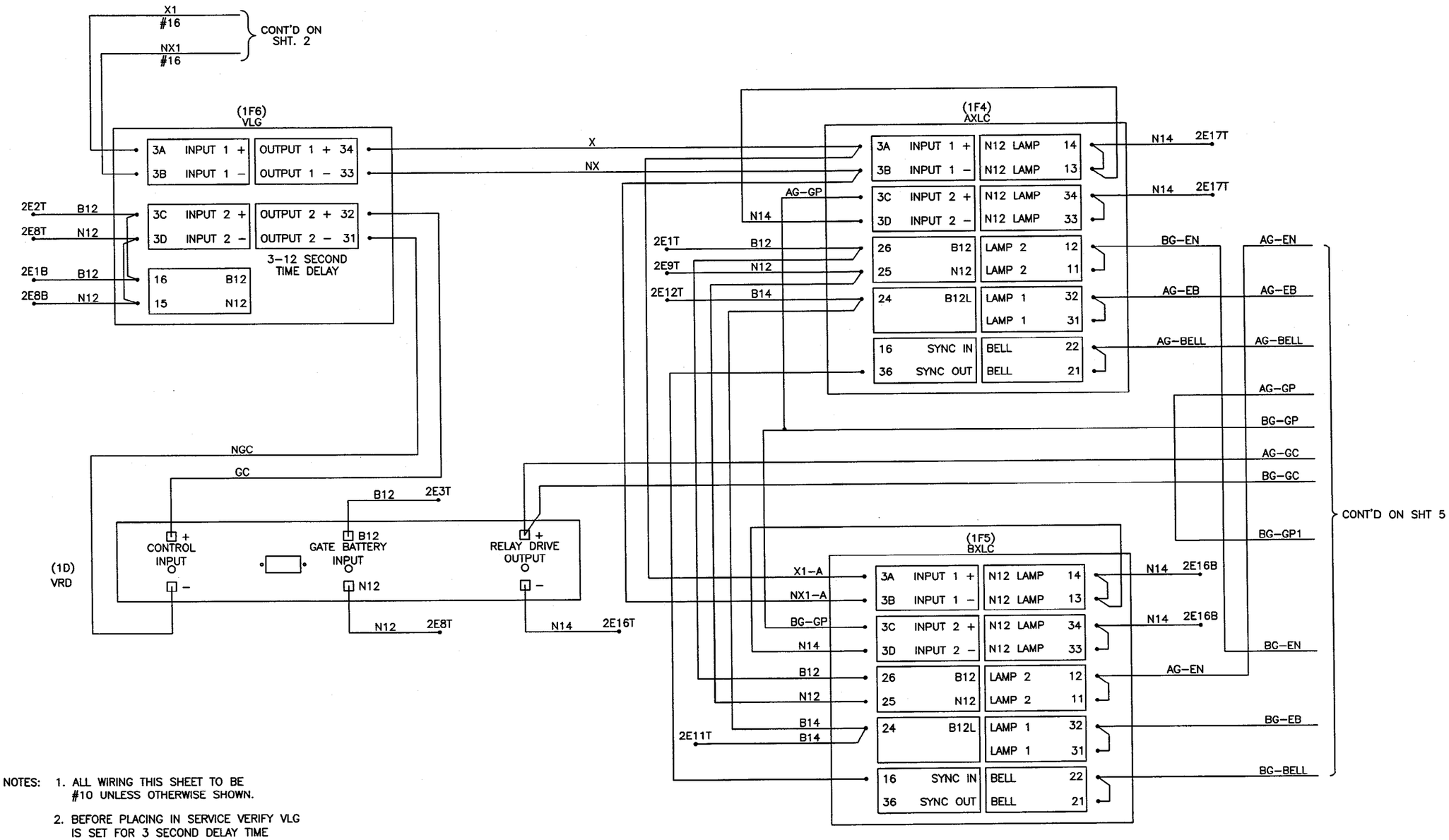

NOTES:
1. ALL WIRING THIS SHEET TO BE #10 UNLESS OTHERWISE SHOWN.
2. BEFORE PLACING IN SERVICE VERIFY VLG IS SET FOR 3 SECOND DELAY TIME

This drawing was created using CADD. All field and office changes are to be routed through main Office in East Joliet. DO NOT make changes to this original copy without notifying the Engineer-Signals, Communications & Electrical

NO	DESCRIPTION	BY	CHK'D	DATE
8				
7				
6				
5				
4				
3				
2				
1				
	AS IN SERVICE 10/30/2000 PW ABF			

REVISIONS

ELGIN, JOLIET & EASTERN RAILWAY COMPANY

LOGIC GATE & LAMP CONTROL WIRING
ST. MARY'S ROAD
LIBERTYVILLE, ILLINOIS

ENGINEERING SERVICES
JOLIET, IL 60432
SCALE NONE

CHECKED BY JJ
IN CHARGE OF JJ

DRAWN BY BJH
DATE 10/31/00
CAD ID [illegible]

FILE NO. 260 489R | SHEET NO. 4 | CONT'D ON 5

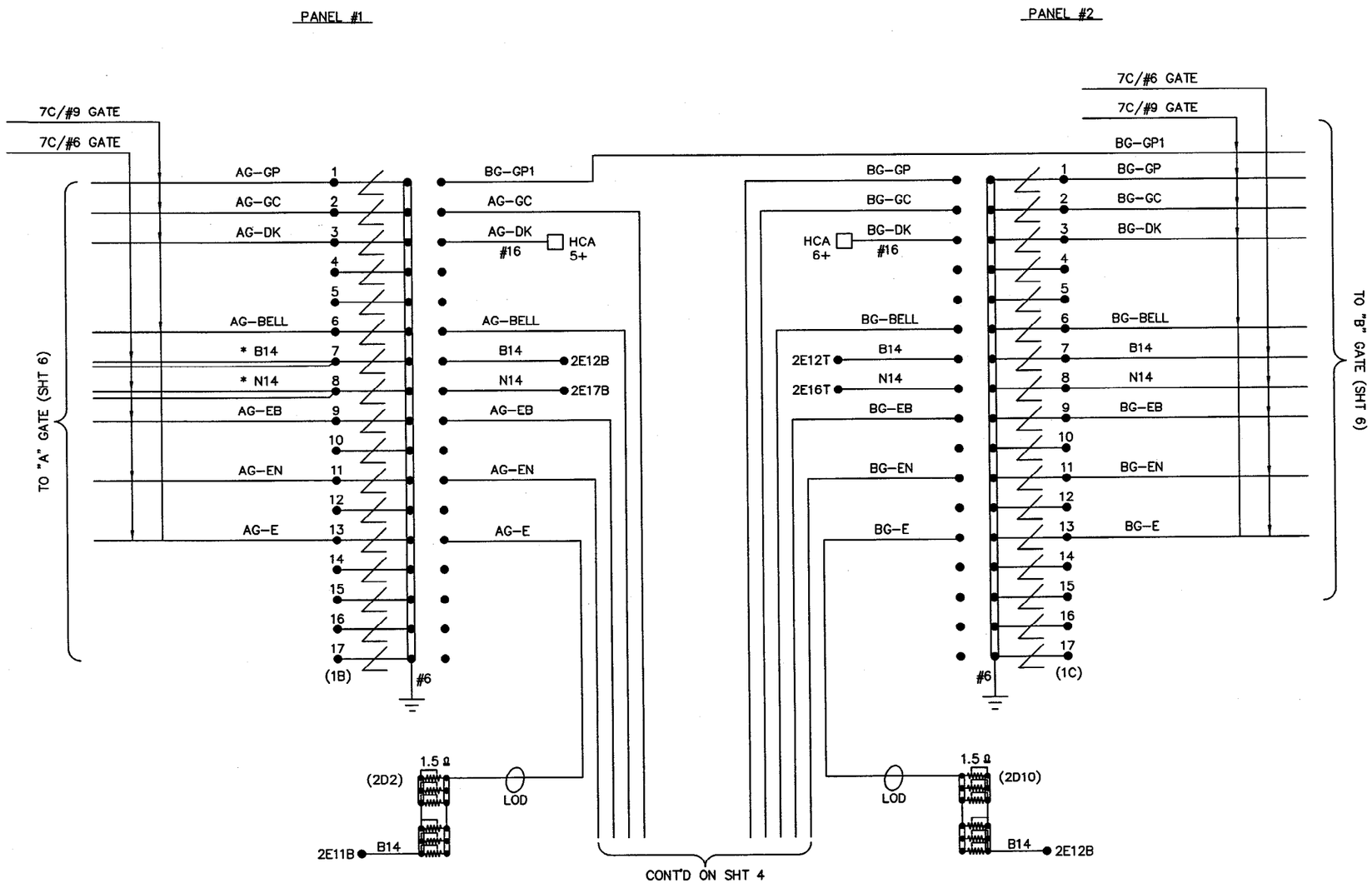

NOTES:

1. ALL WIRING THIS SHEET TO BE #10 UNLESS OTHERWISE SHOWN.
2. ADJUST ALL RESISTORS IN EACH GROUP EVENLY.
3. SPARE WIRES ARE NOT TERMINATED ON PANELS

* B14 & N14 TO A GATE DOUBLED UP FOR VOLTAGE DROP PER BOOK.

This drawing was created using CADD. All field and office changes are to be routed through Main Office in East Joliet. DO NOT make changes to this original copy without notifying the Engineer-Signals, Communications & Electrical.

NO	DESCRIPTION	BY	CHK'D	DATE
8				
7				
6				
5				
4				
3				
2				
1				
	AS IN SERVICE 10/30/2000 PW ABF			

REVISIONS

ELGIN, JOLIET & EASTERN RAILWAY COMPANY

CABLE & ARRESTOR PANEL WIRING
ST. MARY'S ROAD
LIBERTYVILLE, ILLINOIS

ENGINEERING SERVICES
JOLIET, IL 60432
SCALE NONE

CHECKED BY JJ
IN CHARGE OF JJ

DRAWN BY RJH
DATE 10/31/00
CAD ID 8489R-0032.dwg

FILE NO. 260 489R | SHEET NO. 5 | CONT'D ON 6

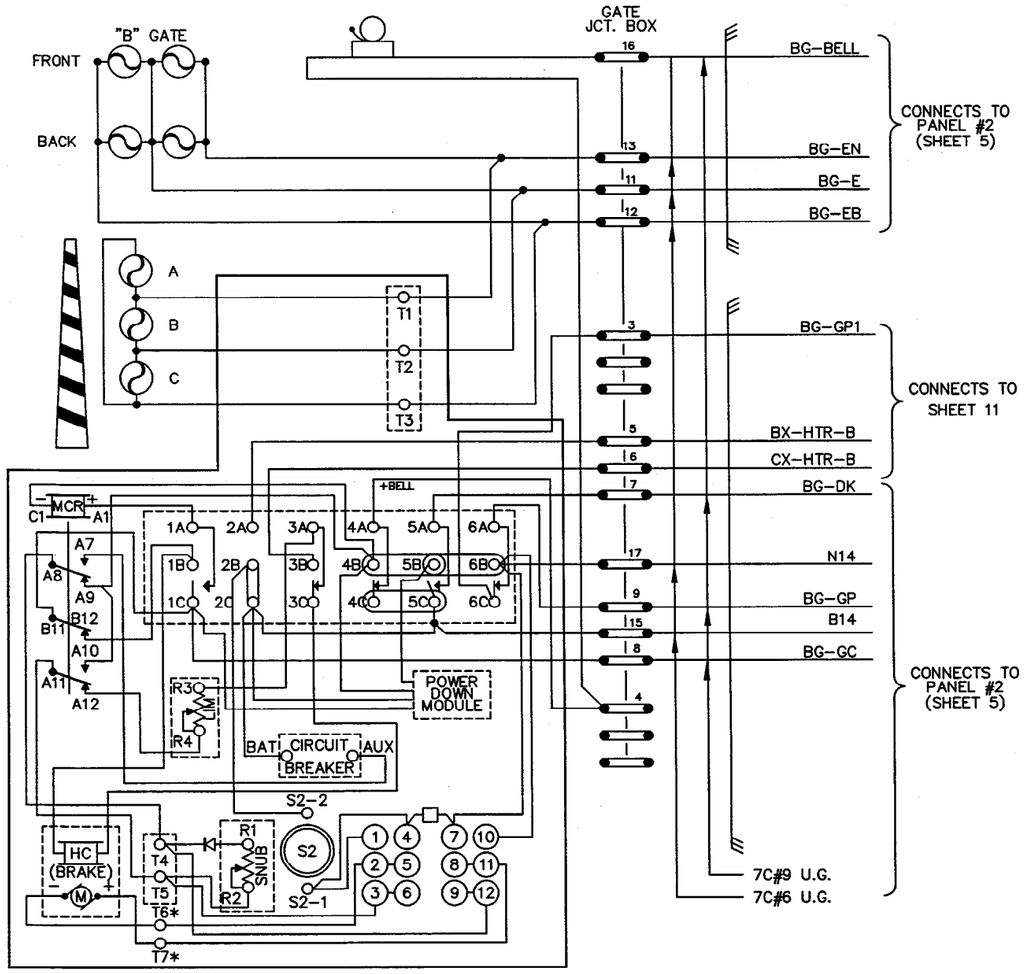

US & S MODEL 95 GATE MECHANISM

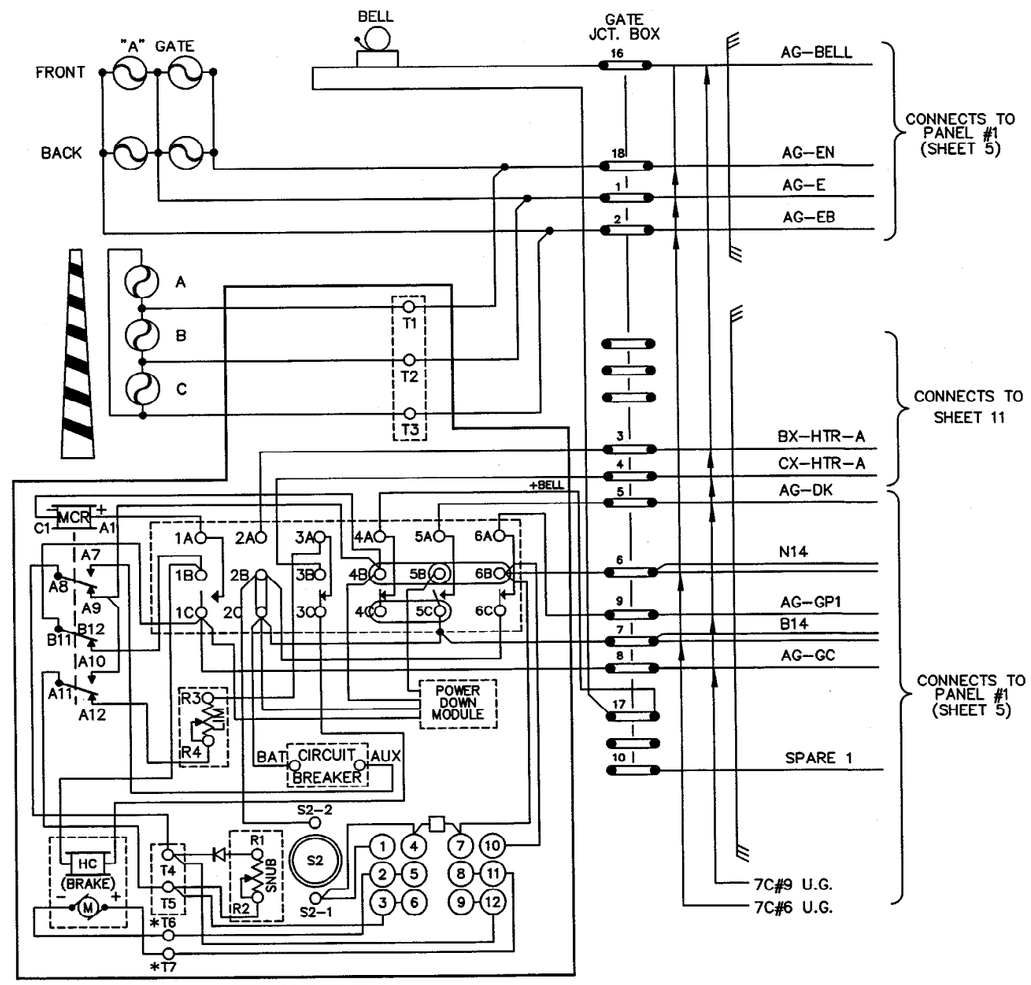

US & S MODEL 95 GATE MECHANISM

(SHOWN WITH MECHANISM IN VERTICAL POS.)

CONTACT	CLOSED	FUNCTION
1	0°–89°	MOTOR UP
2		VACANT SLOT
3	45°–90°	MOTOR DN
4	5°–90°	BELL
5	NOTE 4	GATE DN IND
6	83°–90°	FLASH'G LIGHT

NOTES:

1. JUMPERS MUST BE ADDED TO EACH GATE AS SHOWN.
2. SWITCHES S1 & S2 ARE FOR GATE ARM REHANG POWER DOWN.
3. ALL LIGHT WIRES THIS PAGE ARE TO BE #10 AWG.
4. FACTORY ADJUSTED TO 0°–5°. CHANGE TO 93°–5° TO PROVIDE NORMALLY ENERGIZED INPUT TO RECORDER.
5. GATE HEATER CONNECTED BETWEEN 2A & 3B GATE HEATERS TO BE INSTALLED ON ARRIVAL

THE J

This drawing was created using CADD. All field and office changes are to be routed through Main Office in East Joliet. DO NOT make changes to this original copy without notifying the Engineer-Signals, Communications & Electrical.

NO	DESCRIPTION	BY	CHK'D	DATE
8				
7				
6				
5				
4				
3				
2				
1				
	AS IN SERVICE 10/30/2000 PW ABF			

REVISIONS

ELGIN, JOLIET & EASTERN RAILWAY COMPANY

CROSSING GATE WIRING
ST. MARY'S ROAD
LIBERTYVILLE, ILLINOIS

ENGINEERING SERVICES
JOLIET, IL 60432
SCALE NONE

CHECKED BY JJ
IN CHARGE OF JJ

DRAWN BY BLM
DATE 10/31/00
CAD ID [illegible]

FILE NO. 260 489R
SHEET NO. 6
CONT'D ON 7