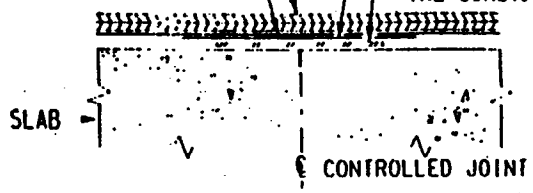

TYPICAL LONGITUDINAL SECTION AT CONTROLLED JOINT

NO SCALE

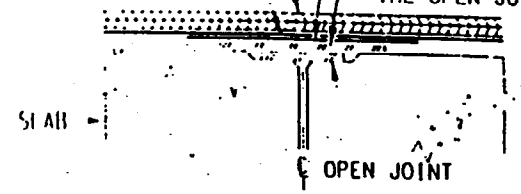

TYPICAL LONGITUDINAL SECTION AT BENTS & BACKWALL

NO SCALE

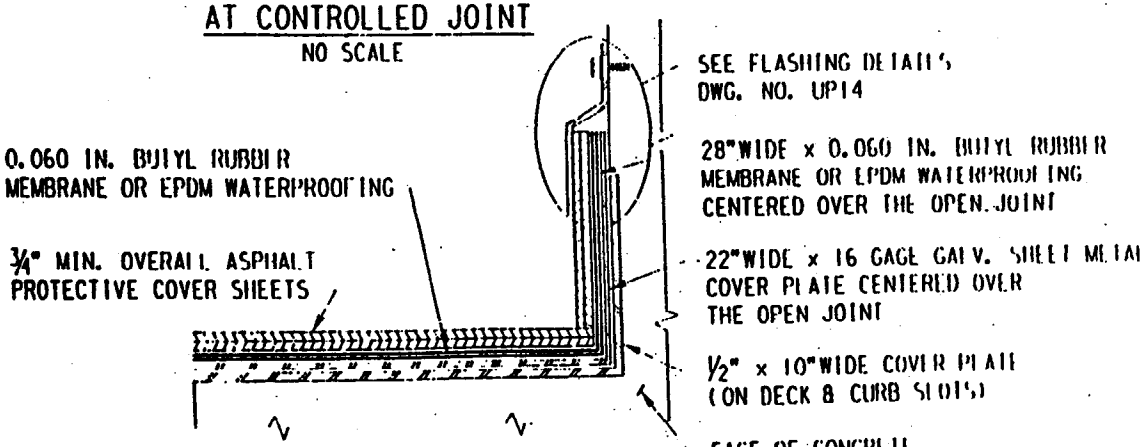

TYPICAL TRANSVERSE SECTION AT OPEN JOINT

NO SCALE

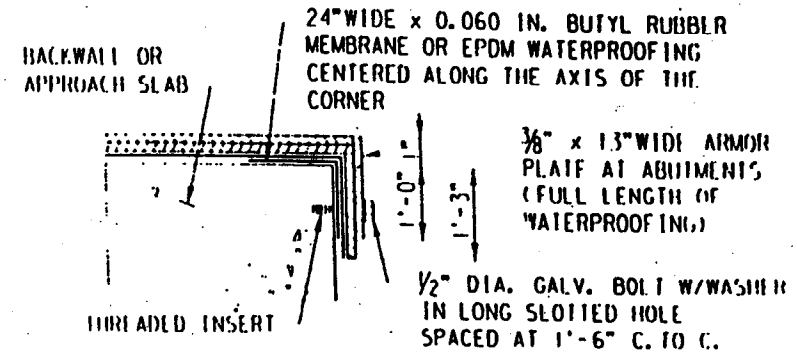

TYPICAL LONGITUDINAL SECTION AT END OF BACKWALL / APPROACH SLABS

NO SCALE

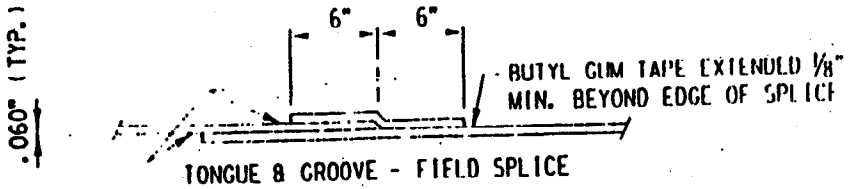

BUTYL RUBBER MEMBRANE OR EPDM WATERPROOFING SPLICE DETAIL

NO SCALE

UNION PACIFIC RAILROAD

WATERPROOFING DETAILS

OFFICE OF CHIEF ENGINEER DESIGN

DATE: 3-31 98

DRAWING UP15

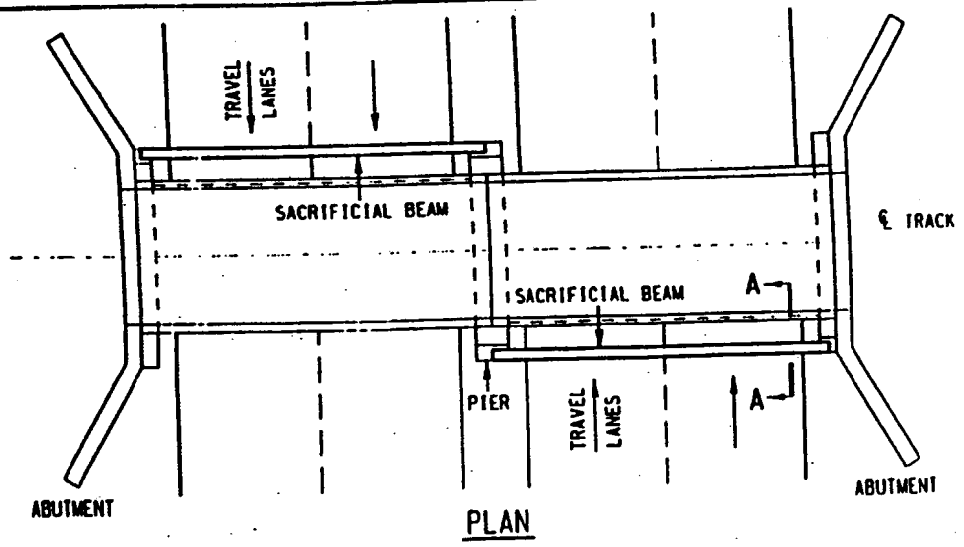

PLAN

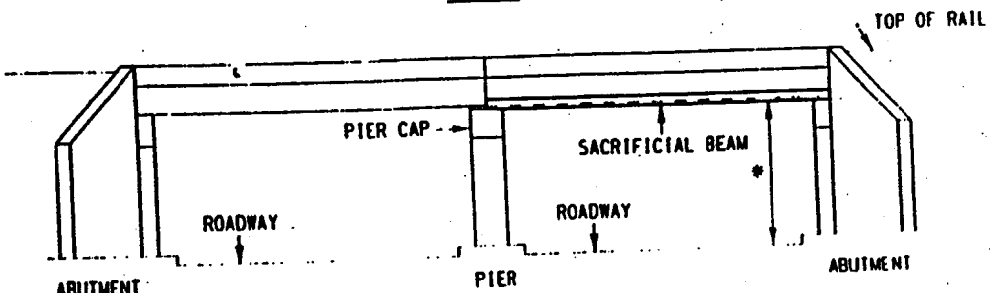

ELEVATION

LAYOUT OF COLLISION IMPACT DEVICES & SACRIFITIAL BEAM

* MIN. VERTICAL CLEARANCE REFER TO TEXT

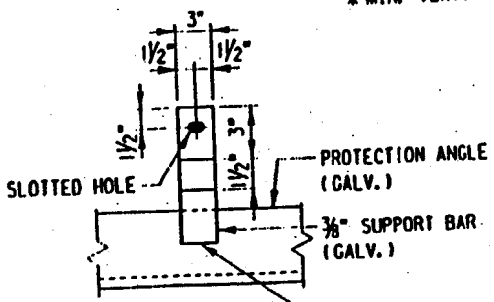

DETAIL B

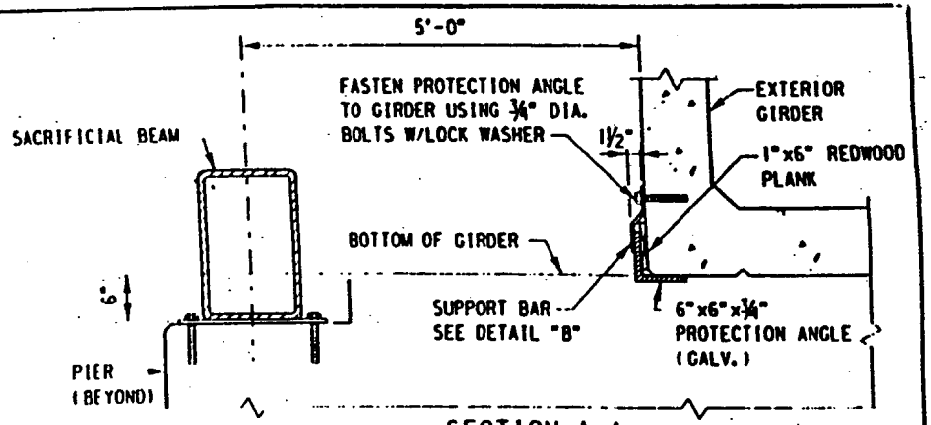

SECTION A-A

(AT VERTICAL FACED GIRDER)

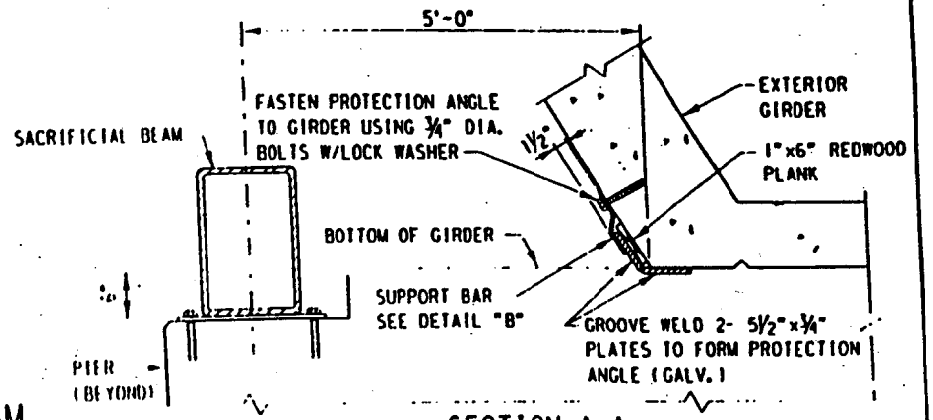

SECTION A-A

(AT SLOPED FACED GIRDER)

UNION PACIFIC RAILROAD

COLLISION IMPACT DEVICES & SACRIFICIAL BEAM

OFFICE OF CHIEF ENGINEER DESIGN

DATE: 3-31-98

DRAWING UP16

STD DWG 4005

GENERAL ARRANGEMENT

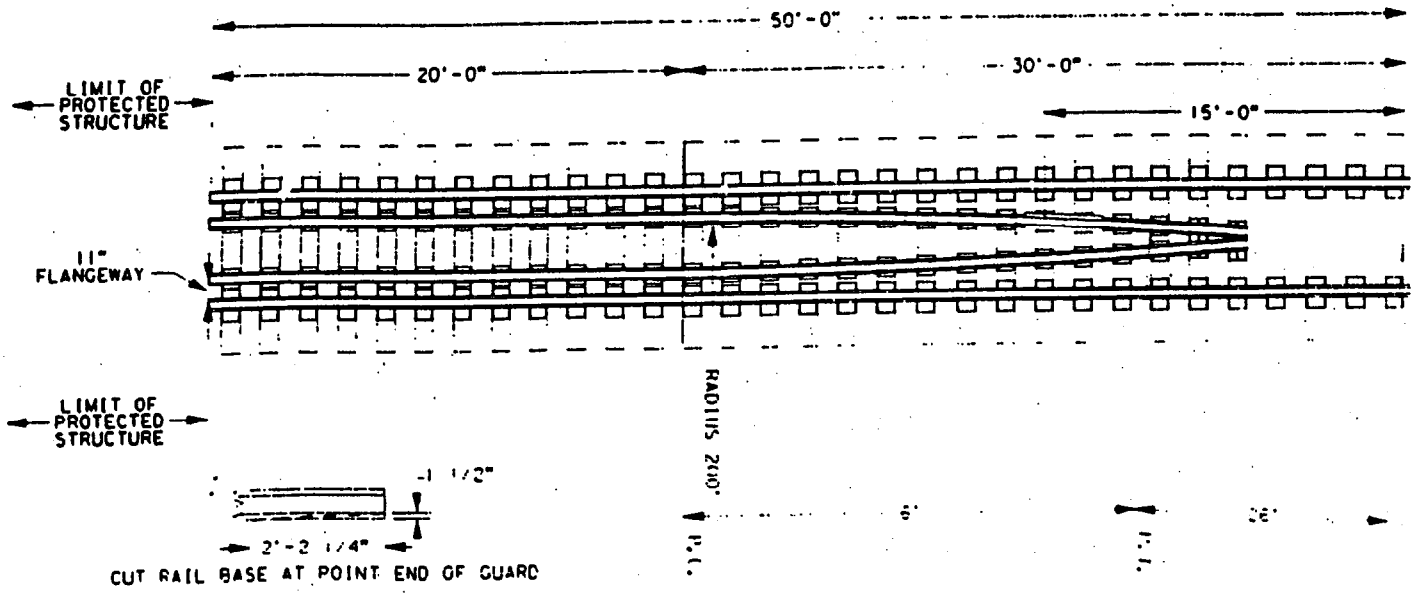

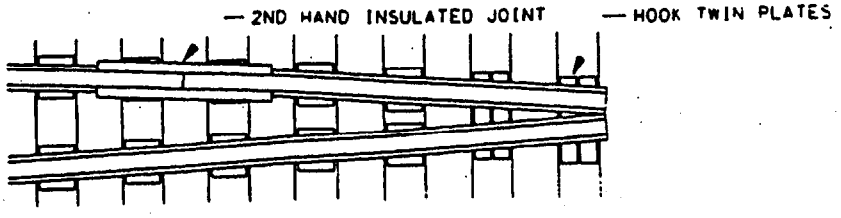

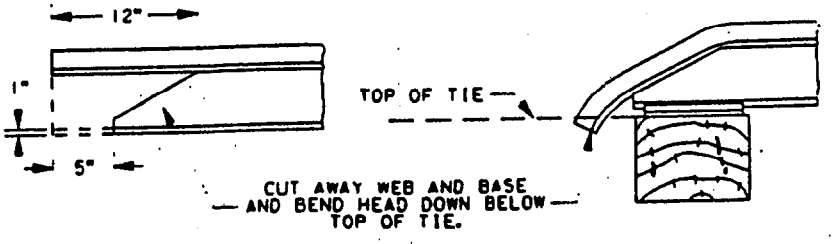

DEPRESSED RAIL HEAD DETAIL

INSTALLATION

GRADE SEPARATION STRUCTURES:
DOUBLE INSIDE GUARD RAILS ARE TO BE INSTALLED ON ALL F.R.A. CLASS 4 AND 5 TRACK WHERE HORIZONTAL CLEARANCES ON BOTH SIDES ARE LESS THAN 18 FEET FROM THE CENTERLINE OF TRACK TO A SUPPORTING MEMBER. CLASS 2 CARRYING MORE THAN 20 M.G.T. TRAFFIC AND ALL CLASS 3 TRACK SHALL HAVE DOUBLE INSIDE GUARD RAILS INSTALLED WHERE HORIZONTAL CLEARANCE ON BOTH SIDES IS LESS THAN 12'-6" FROM THE CENTERLINE OF TRACK TO A STRUCTURE SUPPORTING MEMBER.

BRIDGES LOCATED ON CLASS 3, 4, AND 5 TRACK, ALONG WITH BRIDGES LOCATED ON CLASS 2 TRACK WITH OVER 20 M.G.T.

DOUBLE INSIDE GUARD RAILS ARE TO BE INSTALLED ON:
ALL THROUGH OR DECK TRUSSES AND THROUGH PLATE GIRDER SPANS.
ALL BRIDGES THAT ARE 40 FEET OR HIGHER AND 150 FEET IN LENGTH, AND ON ALL BRIDGES 30 FEET OR MORE IN LENGTH WHERE CURVATURE EXCEEDS 5 DEGREES; UNLESS EXCEPTION IS APPROVED BY CHIEF ENGINEER.

TUNNELS:
[illegible] ARE TO BE INSTALLED THROUGH

NOTES:
INSIDE GUARD RAILS SHALL BE MADE FROM SECOND HAND RAIL AND MAY BE OF THE SAME RAIL SECTION AS THE RUNNING RAILS BUT MUST NOT BE MORE THAN 23 LBS. LIGHTER THAN THE RUNNING RAILS.

NO INSIDE GUARD RAIL LIGHTER THAN 70 LBS. SHALL BE USED.

INSIDE GUARD RAILS ARE TO BE FULLY TIE PLATED WITH SECOND-HAND TIE PLATES, WHERE CLEARANCE PREVENTS THE USE OF TIE PLATES, HOOK TWIN PLATES CAN BE USED IN GUARD RIAL CONVERGENCE AREA.

MINIMUM CLEARANCE BETWEEN THE RUNNING RAIL PLATES AND THE GUARD RAIL PLATES MUST NOT BE LESS THAN 1".

INSTALL GUARD RAIL PLATES SO AS TO CANT THE GUARD RAIL OUTWARD TOWARD THE RUNNING RAIL. WHEN SINGLE SHOULDER FLAT GUARD RAIL PLATES ARE USED, INSTALL THE PLATES WITH THE SHOULDERS ON THE INSIDE TOWARD THE CENTER OF THE TRACK.

SECOND-HAND INSULATED JOINTS TO BE INSTALLED IN GUARD RAILS IN ALL SIGNAL TERRITORIES 15 FEET FROM END OF GOOD RAIL ON ONE SIDE.

INSIDE GUARD RAILS TO BE SPIKED TO THEIR FULL LENGTH WITH 2 SPIKES PER TIE. WHERE NECESSARY, PARTICULARLY ON CURVES, DOUBLE SPIKE GUARD RAIL BOTH INSIDE AND OUT.

ALL GUARD RAIL JOINTS TO BE FULLY BOLTED AND WHEN AVAILABLE, SECOND HAND JOINTS SHOULD BE USED.

GUARD RAIL TO BE LAID WITH FULL RAIL (NO JOINTS) IN THE CURVED POSITION.

GRADE SEPARATION SUPPORTING MEMBER REFERS TO POSTS, COLUMNS, BENTS, PIERS, ABUTMENTS, ETC. SUPPORTING BRIDGES, VIADUCTS, ETC. OVER OR ADJACENT TO THE TRACK.

REF. PREVIOUS UP STD DWG PAGE 2503-A.

UNION PACIFIC RAILROAD
ENGINEERING STANDARDS

DOUBLE INSIDE GUARD RAIL

UNION PACIFIC ADOPTED: OCT. 1905

STD DWG

STD DWG 4015

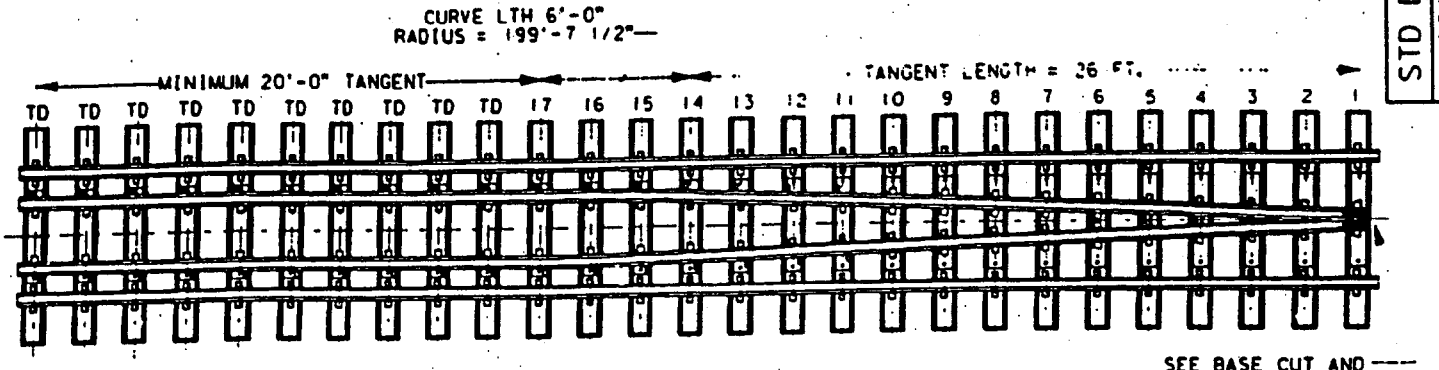

INSTRUCTIONS FOR USE OF DOUBLE INSIDE GUARD RAIL, SEE STD DWG 4005

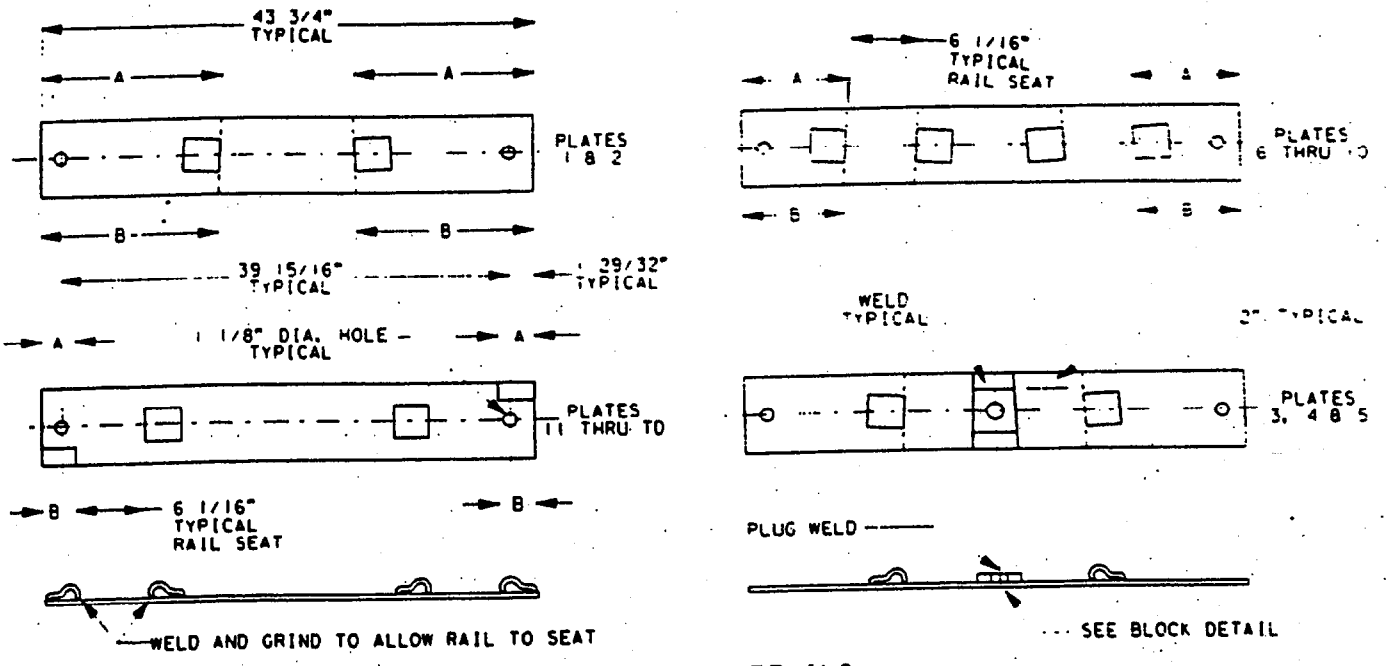

STEEL PLATE DETAILS

1/2" X 7" X 43 3/4" A36 STEEL PLATE

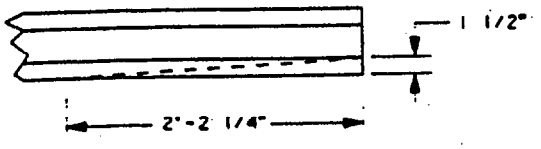

CUT RAIL BASE AT POINT END OF GUARD RAIL

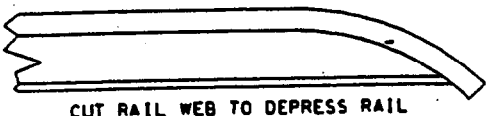

CUT RAIL WEB TO DEPRESS RAIL HEAD PER DETAIL ON STD 4010

NOTES:
USE PANDROL #7299 WELD ON SHOULDERS.

FOR PLATES TD THRU NO. 11 TD, CUT PANDROL SHOULDERS TO 1 1/2" WIDE AND WELD TO PLATE AS SHOWN.

USE COACH SCREW	U.P.	ITEM NO. 503-8750
WASHER	U.P.	ITEM NO. 503-8700
PLATES 1-17	U.P.	ITEM NO. 940-5625
TD PLATES	U.P.	ITEM NO. 940-5620

PLATES 1-17 TWO SETS REQUIRED PER INSTALLATION.

FOR CONCRETE TIE, SEE STD DWG 0202

SHOULDER LOCATION DIMENSIONS

PLATE NO.	A (IN.)	B (IN.)
1	16.858	16.588
2	15.939	15.671
3	15.023	14.756
4	14.106	13.838
5	13.189	12.921
6	12.272	12.004
7	11.356	11.088
8	10.439	10.171
9	9.523	9.256
10	8.606	8.339
11	7.689	7.422
12	6.773	6.505
13	5.859	5.591
14	4.941	4.683
15	4.160	3.980
16	3.627	3.517
17	3.340	3.312

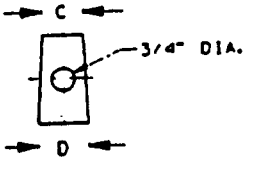

1/2" X 4" A36 STEEL BLOCK

1/2" X 4" STEEL BLOCK DIMENSIONS

PLATE	C (IN.)	D (IN.)
3	1.791	2.098
4	3.624	3.930
5	5.458	5.764

UNION PACIFIC RAILROAD ENGINEERING STANDARDS

DOUBLE INSIDE GUARD RAIL FOR CONCRETE TIES

UNION PACIFIC

ADOPTED: DEC. 31, 1996
REVISED:

STD DWG