ILLINOIS DEPARTMENT OF TRANSPORTATION
STRUCTURE BORING LOG

Date 6/28/04

ROUTE _____ DESCRIPTION 171st Street Reconstruction and 7 Acrefeet Detention Pond

SECTION _____ STRUCTURE NO. _____ DRILLER SEECO Consultants Inc./SG & D

COUNTY _____ LOCATION 171st & Park, Hazel Crest, IL

Boring No. PB-6
Station _____
Offset _____
Surface El. +617.48+/- M.S.L.

Surf. Wat. El. _____
Groundwater Elev.:
When Drilling 613.48 WS
at Completion 613.48 ACR
After _____ Hrs

Description	DEPTH	BLOWS	QU TSF	W %
2" FILL, CRUSHED STONE, Gray				
FILL: SANDY LOAM, Dark Brown, Brown and Black, Loose, Moist (A-2-4)	1.0			
	2.0	8		20.4
	3.0			
LOAM, Brown, Medium Dense, Saturated (A-4)				
	4.0			
(Grain Size Analysis)	5.0			
	6.0	10		
	7.0			
	8.0			
SANDY LOAM, Gray, Loose, Saturated (A-2-4)				
	9.0			
	10.0	9		
	11.0			
	12.0			
	13.0			
	14.0	15		
(Grain Size Analysis)	15.0			
SAND, Gray, With Some Gravel, Dense, Saturated (A-2-4)	16.0			
	17.0			
	18.0			
(Grain Size Analysis)	19.0	34		
	20.0			
SAND, Gray, Medium Dense, Saturated (A-2-4)				
	21.0			
	22.0			
	23.0			
	24.0	18		
End of Boring @ 25.0 Feet	25.0			
	26.0			
	27.0			
	28.0			
	29.0			
	30.0			

N=Standard Penetration Test-Blows per foot to drive 2" O.D. Split Spoon Sampler 12" with 140lb hammer falling 30"

QU: B=Bulge S=Shear P=Penetration Test
Stations, Depths, Offset, and Elevations are in Feet
Offset is from edge of traveled Pavement

SEECO Job No. 7375G-1

ILLINOIS DEPARTMENT OF TRANSPORTATION
STRUCTURE BORING LOG

Date 6/18/04

ROUTE _____ DESCRIPTION 171st Street Reconstruction and 7 Acrefeet Detention Pond

SECTION _____ STRUCTURE NO. _____ DRILLER SEECO Consultants Inc./SG & D

COUNTY _____ LOCATION 171st & Park, Hazel Crest, IL

Boring No. PB-7
Station _____
Offset _____
Surface El. 616.91+/- M.S.L.

Surf. Wat. El. _____
Groundwater Elev.:
When Drilling 611.91 WS
at Completion 611.91 ACR
After Hrs

Description	DEPTH	BLOWS	QU TSF	W %
LOAM, Dark Gray (A-5)				
SANDY LOAM, Dark Gray, Loose (A-2-4)	1.0			
SANDY LOAM, Brown, Loose, Moist (A-2-4)	2.0	6		20.0
	3.0			
	4.0			
	5.0			
SAND, Gray, Loose, Saturated (A-3)	6.0	8		
	7.0			
	8.0			
	9.0			
SANDY LOAM, Gray, Loose, Saturated (A-4)	10.0	3		
(Grain Size Analysis)	11.0			
SAND, Gray, Loose, Saturated (A-2-4)	12.0			
	13.0			
	14.0	4		
	15.0			
SAND, Gray, Medium Dense, Saturated (A-2-4)	16.0			
	17.0			
	18.0			
(Grain Size Analysis)	19.0	16		
	20.0			
	21.0			
	22.0			
	23.0			
(Grain Size Analysis)	24.0	18		
	25.0			
End of Boring @ 25.0 Feet	26.0			
	27.0			
	28.0			
	29.0			
	30.0			

N=Standard Penetration Test-Blows per foot to drive 2" O.D. Split Spoon Sampler 12" with 140lb hammer falling 30"

QU B=Bulge S=Shear P=Penetration Test
Stations, Depths, Offset, and Elevations are in Feet
Offset is from edge of traveled Pavement

SEECO Job No 7375G-1

ILLINOIS STATE TOLL HIGHWAY AUTHORITY
Testing Service Corporation
STRUCTURE BORING LOG

Date 10/9/01

ROUTE I-80 / 294 DESCRIPTION Tri-State Tollway over Markham RR Yard, Contract No. RR-01-8940

SECT. _____ STRUCT. NO. _____ DRILLED BY TSC / L-52,762

COUNTY Cook LOCATION Bridge Piers S. 30 , TWP. 36 N , RNG. 14 E

Boring No. SB-9
Station 201+10
Offset 79.00ft RT
Surface Elev. 620.40 ft

Surface Water Elev. _____
Groundwater Elev.:
when drilling 613.9
at Completion _____
after 24 Hrs. 614.2

Description	Elev.	Depth	Blows	Qu tsf	W %
Black SANDY LOAM (topsoil)	619.30				
Loose dark brown SAND, trace gravel, damp A-1-b	617.40		2 2 2		
Loose brown medium to fine SAND, moist to saturated A-3	512.40	-5	3 3 3		
Loose gray medium to fine SAND, saturated A-3	604.90	-10	1 2 3		
Firm gray medium to fine SAND, saturated A-3	597.40	-15	3 4 5		
Dense gray SAND and GRAVEL, saturated A-1-a	595.40	-20	3 3 4		
		-25	2 3 4		
			4 6 9		
			3 5 6		
			3 4 6		
			10 21 13		

Description	Elev.	Depth	Blows	Qu tsf	W %
(Wash Drill below 11')					
Very dense gray SILTY LOAM, little gravel, damp A-4	592.40		21 38 44	P 2.0	11.5
Very dense gray sandy SILT, moist A-4	589.90	-30	22 28 35		
Very dense gray SILTY LOAM, little gravel, moist A-4	587.40		30 32 40	P 2.0	14.3
Very dense gray clayey GRAVEL, moist A-1-a	584.90	-35	65/4"		13.9
Very dense gray silty SAND and GRAVEL, occasional Cobbles, saturated A-1-a	577.40	-40	38 44 50/3"		
			46 50/4"		
			61/5"		
Very dense gray Gravel, Cobbles and Boulders,	574.90	-45	75/5"		
Probable Dolomite Rock Surface (hard drilling)	574.40		75/2"		
Medium gray Dolomite Vert. fracture 46' to 48' Calcite filled joint 48' to 49.5'		-50			

SPT (N) = Sum of last two blow values in sample. (Qu) B=Bulge S=Shear P=Penetration Test
Stations, Depths, Offset, and Elevations are in Feet

ILLINOIS STATE TOLL HIGHWAY AUTHORITY
Testing Service Corporation
STRUCTURE BORING LOG

Date 10/9/01

STRUCTURE NO. _____
ROUTE I-80 / 294
SECTION _____
COUNTY Cook

Boring No. SB-9
Station 201+10
Offset 79.00ft RT
Elevation 570.40 ft

DEPTH	BLOWS	Qu tsf	W %
Medium gray Dolomite, argillaceous, massive bedded, dense Vert. fractures 55.5' to 56' Core Run 46.0' to 56.0' Recovery = 100% RQD = 90%			
-55			
564.40			
End of Boring at 56.0' CME 750 ATV Drill Rig (#53) CME Automatic Hammer 4.5" (114 mm) SFA to 11 feet Rotary Wash Drill below 11 feet			
-60			
-65			
-70			
-75			

SPT (N) = Sum of last two blow values in sample (Qu) B=Bulge S=Shear P=Penetration Test
Stations, Depths, Offsets, and Elevations are in Feet

ILLINOIS STATE TOLL HIGHWAY AUTHORITY
Testing Service Corporation
STRUCTURE BORING LOG

Date 10/9/01

JTE I-80 / 294 DESCRIPTION Tri-State Tollway over Markham RR Yard, Contract No. RR-01-8940

CT. _____ STRUCT. NO. _____ DRILLED BY TSC / L-52 762

JNTY Cook LOCATION Bridge Piers S. 30 , TWP. 36 N , RNG. 14 E

ing No. SB-11
tion 202+11
set 69.00ft RT
face Elev. 617.90 ft

Surface Water Elev. _____
Groundwater Elev.:
when drilling 613.9
at Completion _____
after 24 Hrs. 613.5

Description	Elev.	Depth	Blows	Qu tsf	W %
LL - Black and brown SAND, trace gravel, brick	617.20				
rm brown medium to fine AND, damp -3	614.90		3 4 6		
pose brown silty SAND, ery moist to wet -1-b	612.40	-5	4 3 3		
Firm gray medium to fine SAND, saturated A-3	609.90		3 4 6		
Firm gray SAND, saturated A-1-b	607.40	-10	3 5 5		
Firm gray medium to fine SAND, saturated A-3	602.40	-15	9 10 10 / 5 9 12		
Firm gray SAND, saturated A-1-b	599.90		10 12 13		
Very dense gray SAND and GRAVEL, saturated A-1-a	597.40	-20	20 50/2"		
Very dense gray SILTY LOAM, trace gravel, moist A-4	594.90		26 50/4"	P 4.5+	10.6
Very dense gray sandy SILT, some gravel, very moist A-4/A-1	592.90	-25	48 50/2"		
(Wash Drill below 11')					
Very dense gray sandy SILT, some gravel, moist A-4	589.90		26 37 48		
Dense to very dense gray SILT, little gravel, moist A-4	584.90	-30	16 21 34 / 19 35 40		
Dense to very dense gray SILTY LOAM, trace gravel, occasional silt seams, moist to very moist A-4	579.90	-35	15 18 24 / 28 28 50/3"	12.0 / 10.0	
Very dense gray silty SAND and GRAVEL, occasional Gobbles, saturated A-1-a	576.40	-40	19 37 48		
Probable Dolomite Rock Surface (hard drilling)	574.40		39 75/1"		
End of Boring at 43.5'		-45			
CME 750 ATV Drill Rig (#53) CME Automatic Hammer		-50			

SPT (N) = Sum of last two blow values in sample. (Qu) B=Bulge S=Shear P=Penetration Test

ILLINOIS STATE TOLL HIGHWAY AUTHORITY
Testing Service Corporation
STRUCTURE BORING LOG

Date 10/2/01

OUTE I-80 / 294 DESCRIPTION Tri-State Tollway over Markham RR Yard, Contract No. RR-01-8940

ECT. STRUCT. NO. DRILLED BY TSC / L-52 762

OUNTY Cook LOCATION Bridge Piers S. 30 , TWP. 36 N , RNG. 14 E

oring No. SB-13
tation 203+12
ffset 79.00ft RT
urface Elev. 618.90 ft

Surface Water Elev.
Groundwater Elev.:
when drilling 612.9
at Completion
after Hrs.

Description	Elev.	Depth	Blows	Qu tsf	W %
FILL - Black SANDY LOAM (topsoil) very moist A-2-4	615.90		3 3 4		26.3
Loose brown silty SAND, trace gravel, moist A-1-b	613.40	-5	2 2 4		
Very loose brown medium to fine SAND, saturated A-3	610.90		1 0 1		
Very loose gray medium to fine SAND, saturated A-3	608.40	-10	1 1 2		
Firm gray medium to fine SAND, trace gravel, saturated A-3	600.90	-15	3 6 7 / 5 9 11 / 5 7 8		
Firm gray SAND, trace gravel, saturated A-1-b	598.40	-20	5 9 11		
Dense gray SILTY LOAM, some gravel, moist A-4	595.90		28 23 29	S 1.1 10%	
Dense gray SILT, trace gravel, moist A-4	593.90	-25	19 23 31	S 1.4 5%	
(Wash Drill below 10 feet)					
Dense gray sandy SILT, trace gravel, moist A-4	590.90		15 13 26	S 1.3 5%	16.2
		-30	19 39 35	S 2.5 12%	9.7
Very dense gray SILTY LOAM, some gravel, occasional Cobbles, moist to very moist A-4	583.40	-35	35 50/6" / 27 31 43	S 1.9 7% / S 3.4 10%	9.4 / 15.0
Very dense gray silty SAND and GRAVEL, occasional silt layer, occasional Cobbles, moist to very moist A-1/A-4	577.40	-40	49 31 42 / 38 50/5" / 100/5.5"		
Probable Dolomite Rock Surface (hard drilling)	575.90				
End of Boring at 42 feet		-45			
#CME-75 Truck Rig (#256) CME Automatic Hammer					
4.5" (114 mm) SFA to 10 feet. Rotary Wash Drill below 10 feet		-50			

SPT (N) = Sum of last two blow values in sample. (Qu) B=Bulge S=Shear P=Penetration Test
Stations, Depths, Offsets and Elevations are in Feet

ILLINOIS STATE TOLL HIGHWAY AUTHORITY
Testing Service Corporation
STRUCTURE BORING LOG

Date 10/3/01

UTE I-80 / 294 DESCRIPTION Tri-State Tollway over Markham RR Yard, Contract No. RR-01-8940

CT. _____ STRUCT. NO. _____ DRILLED BY TSC / L-52,762

UNTY Cook LOCATION Bridge Piers S. 30 , TWP. 36 N , RNG. 14 E

ing No. SB-15
tion 204+12
set 75.00ft RT
rface Elev. 632.00 ft

Surface Water Elev. _____
Groundwater Elev.:
when drilling _____
at Completion _____
after _____ Hrs. _____

Description	Elev.	Depth	Blows	Qu tsf	W %
LL - Dark brown SAND, trace gravel, trace bricks and cinders, moist A-1-b	629.00		1 1 1		
ILL - Gray CLAY LOAM, some gravel, trace organic, moist A-6	625.50	-5	1 2 3	P 2.25	
			3 3 3	P 1.5	24.0 20.7
ILL - Brown SILTY LOAM, trace gravel, trace organic, very moist A-4/A-6	619.00	-10	2 2 2	P 1.5	24.3
			1 1 1	S 1.0 10%	23.2
Soft black organic SANDY LOAM, very moist A-6	616.50	-15	2 2 3	P 0.25	39.3
Loose brown silty SAND, wet A-1-b	614.00		4 4 3		22.3
Firm brown medium to fine SAND, trace gravel, saturated A-1-b	611.50	-20	6 9 11		20.6
Firm gray medium to fine SAND, saturated A-3			7 9 12		
		-25	5 4 6		

Description	Elev.	Depth	Blows	Qu tsf	W %
(Bore Hole dry to 10 feet) [Wash Drill below 10 feet]			3 4 6		
Firm gray medium to fine SAND, saturated A-3	601.50	-30	7 9 10		
Firm gray fine silty SAND, saturated A-1-b	600.00		9 11 15		
Firm gray SAND and GRAVEL, saturated A-1-b	599.00				
Very dense gray clayey SAND, some gravel, occasional Cobbles, very moist A-2-4	596.50	-35	58 38 32	S 1.4 7%	
Dense gray SILTY LOAM, trace gravel, moist A-4	594.00		31 32 28	S 1.4 10%	18.0
Dense gray silty SAND, trace clay, very moist A-2-4	591.50	-40	31 25 33	S 0.6 5%	
Dense gray sandy SILT, very moist A-4	586.50	-45	14 22 28		
			15 19 31	S 1.0 8%	
Very dense gray SILTY LOAM, some gravel, occasional Cobbles, moist A-4/A-1	584.00		58 50/0"	P 2.0	12.0
Very dense gray clayey SAND and GRAVEL, occasional Cobbles, very moist A-1-a		-50	61 50/2"		

SPT. (N) = Sum of last two blow values in sample (Qu) B=Bulge S=Shear P=Penetration Test
Stations, Depths, Offsets and Elevations are in Feet

ILLINOIS STATE TOLL HIGHWAY AUTHORITY
Testing Service Corporation
STRUCTURE BORING LOG

Date 10/3/01

TRUCTURE NO. _____
OUTE I-80 / 294
ECTION _____
OUNTY Cook

oring No. SB-15 tation 204+12 ffset 75.00ft RT levation 582.00 ft	DEPTH	BLOWS	Qu tsf	W %
Very dense gray clayey SAND and GRAVEL, occasional Cobbles, very moist A-1-a		48 50/4"		
577.00	-55			
Probable Dolomite Rock Surface (hard drilling)				
574.00				
End of Boring at 58.0 feet				
#CME-75 Truck Rig (#256) CME Automatic Hammer	-60			
4.5" (114 mm) SFA to 10 feet Rotary Wash Drill below 10 feet				
	-65			
	-70			
	-75			

SPT (N) = Sum of last two blow values in sample. (Qu) B=Bulge S=Shear P=Penetration Test
Stations, Depths, Offsets, and Elevations are in Feet

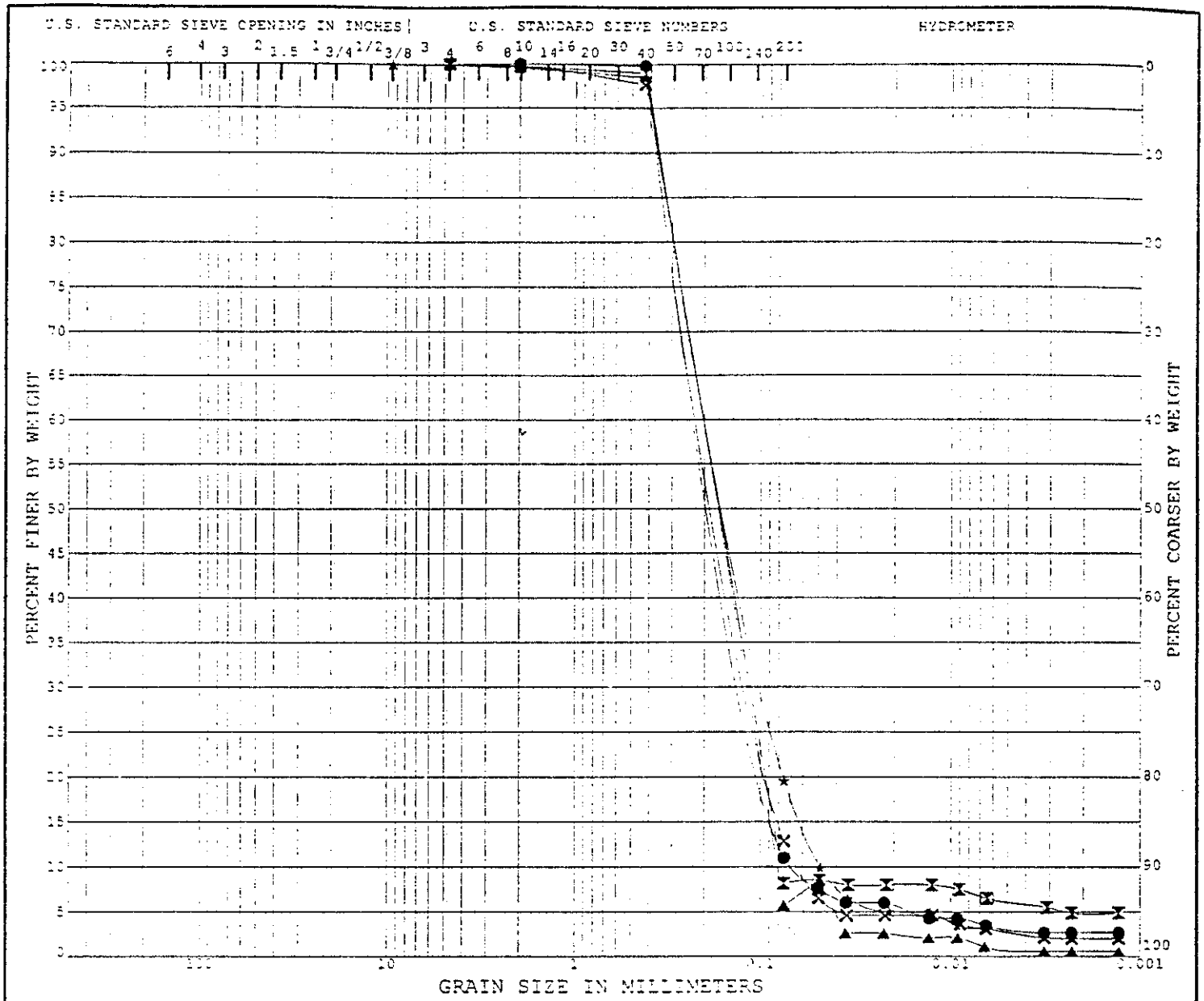

Boulders	Gravel	Sand		Silt	Clay
		coarse	fine		

	Boring No.	Depth	Lab. No.	AASHTO Soil Classification (Textural)	MC%	LL	PL	PI
●	RB-1	14.00'		Sand, Brown (A-2-4)				
⧗	RB-2	6.00'		Sand, Brown (A-3)				
▲	RB-3	10.00'		Sand, Gray (A-3)				
★	RB-4	14.00'		Sandy Loam, Gray (A-2-4)				
✕	RB-5	6.00'		Sandy Loam, Gray (A-2-4)				

	%< 3"	%Pass#10	%Pass#40	%Pass#200	%<.002mm	%Gravel	%Sand	%Silt	%Clay	%Colloids
●		100.0	99.8	11.0	2.7	0.0	89.0	8.3		
⧗		99.7	99.0	8.2	4.9	0.3	91.5	3.3		
▲			100.0	5.7	0.6	0.0	94.3	5.1		
★		99.5	98.5	19.6	2.0	0.5	79.9	17.6		
✕		99.8	97.7	12.9	2.0	0.2	86.9	10.9		

SEECO
Consultants, Inc.
Tinley Park, Illinois 60477

Project	171st Street Reconstruction and 7 Acrefeet Detention Pond
Location	171st & Park, Hazel Crest, IL
Date	8/9/04 Job No. 7375G-1

GRADATION CURVES

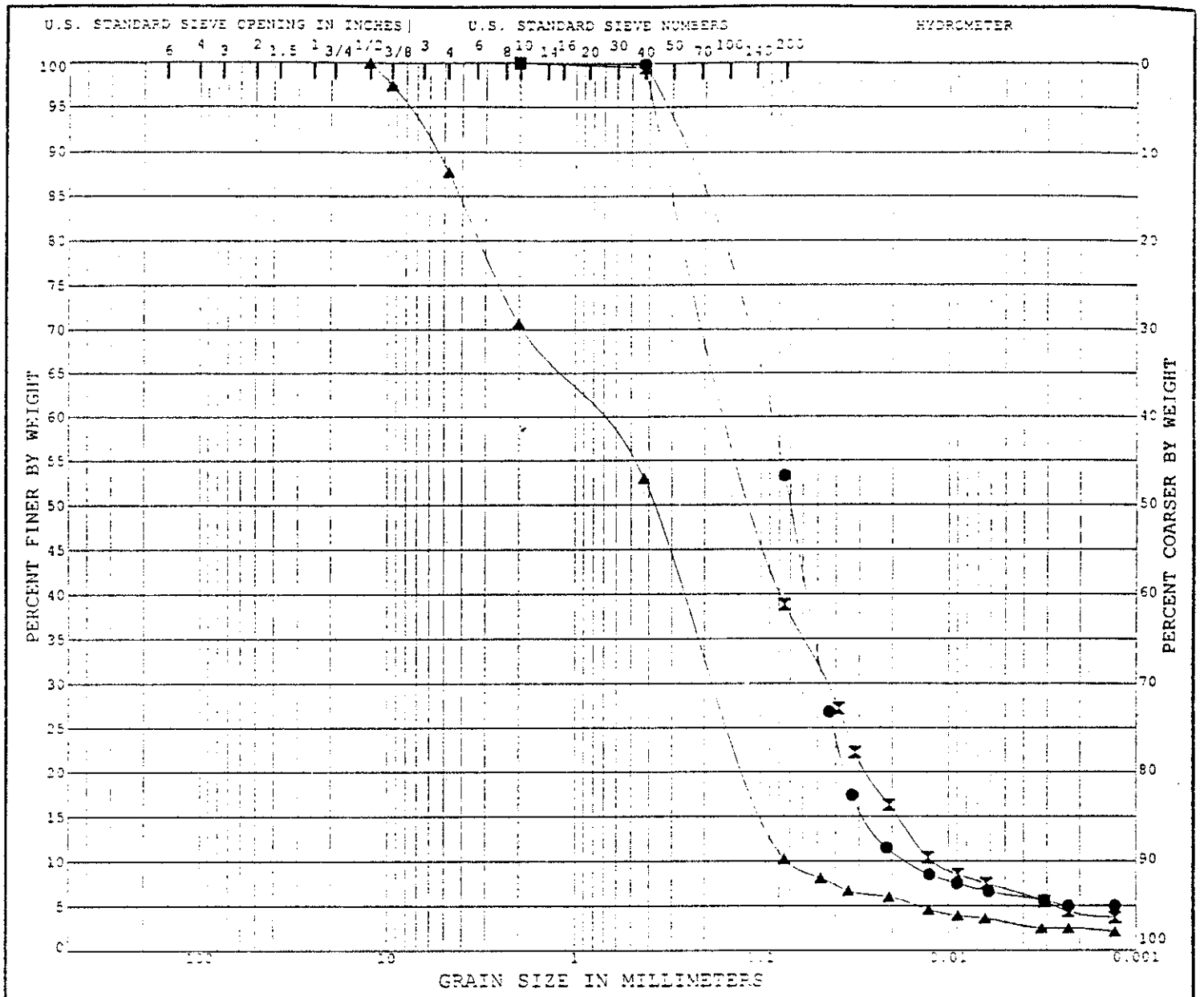

Boulders	Gravel	Sand		Silt	Clay
		coarse	fine		

	Boring No.	Depth	Lab. No.	AASHTO Soil Classification (Textural)	MC%	LL	PL	PI
●	PB-6	5.00'		**Loam, Brown (A-4)**				
⧗	PB-6	14.00'		**Sandy Loam, Gray (A-2-4)**				
▲	PB-6	19.00'		**Sand With Some Gravel, Gray (A-2-4)**				

	%< 3"	%Pass#10	%Pass#40	%Pass#200	%<.002mm	%Gravel	%Sand	%Silt	%Clay	%Colloids
●		100.0	99.9	53.3	5.0	0.0	46.7	48.3		
⧗		100.0	99.5	38.8	4.2	0.0	61.2	34.6		
▲		70.7	53.0	10.2	2.4	29.3	60.5	7.8		

SEECO
Consultants, Inc.
Tinley Park, Illinois 60477

Project	171st Street Reconstruction and 7 Acrefeet Detention Pond
Location	171st & Park, Hazel Crest, IL
Date	8/9/04 Job No. 7375G-1

GRADATION CURVES

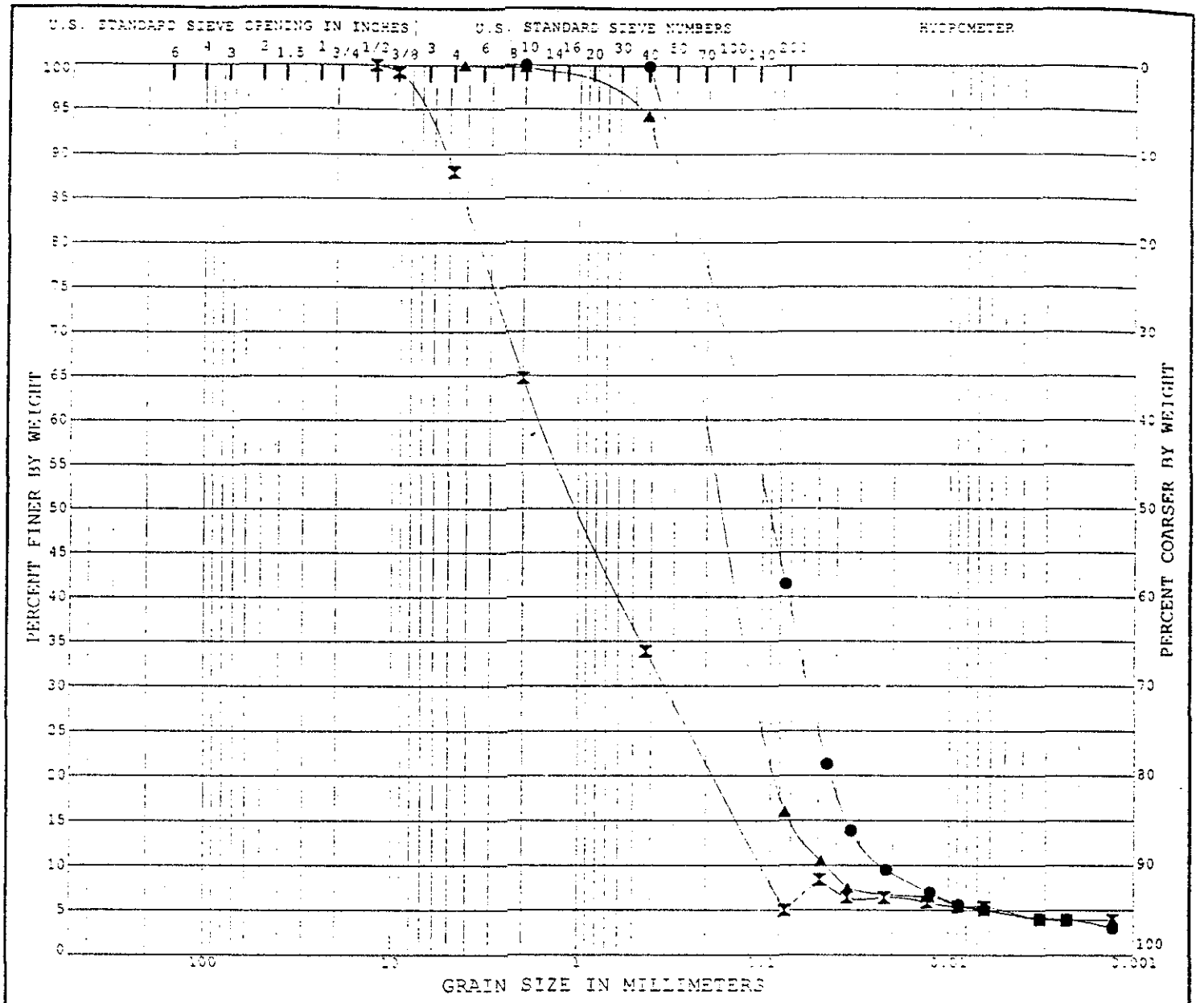

Boulders	Gravel	Sand (coarse / fine)	Silt	Clay

	Boring No.	Depth	Lab. No.	AASHTO Soil Classification (Textural)	MC%	LL	PL	PI
●	PB-7	10.00'		**Sandy Loam, Gray (A-4)**				
⧗	PB-7	19.00'		**Sand with Some Gravel, Gray (A-3)**				
▲	PB-7	24.00'		**Sand, Gray (A-2-4)**				

	%< 3"	%Pass#10	%Pass#40	%Pass#200	%<.002mm	%Gravel	%Sand	%Silt	%Clay	%Colloids
●		100.0	99.9	41.5	3.8	0.0	58.5	37.7		
⧗		64.7	33.9	5.0	3.9	35.3	59.7	1.1		
▲		99.7	94.3	16.0	3.9	0.3	83.7	12.1		

SEECO
Consultants, Inc.
Tinley Park, Illinois 60477

Project	171st Street Reconstruction and 7 Acrefeet Detention Pond
Location	171st & Park, Hazel Crest, IL
Date	8/9/04 Job No. 7375G-1

GRADATION CURVES

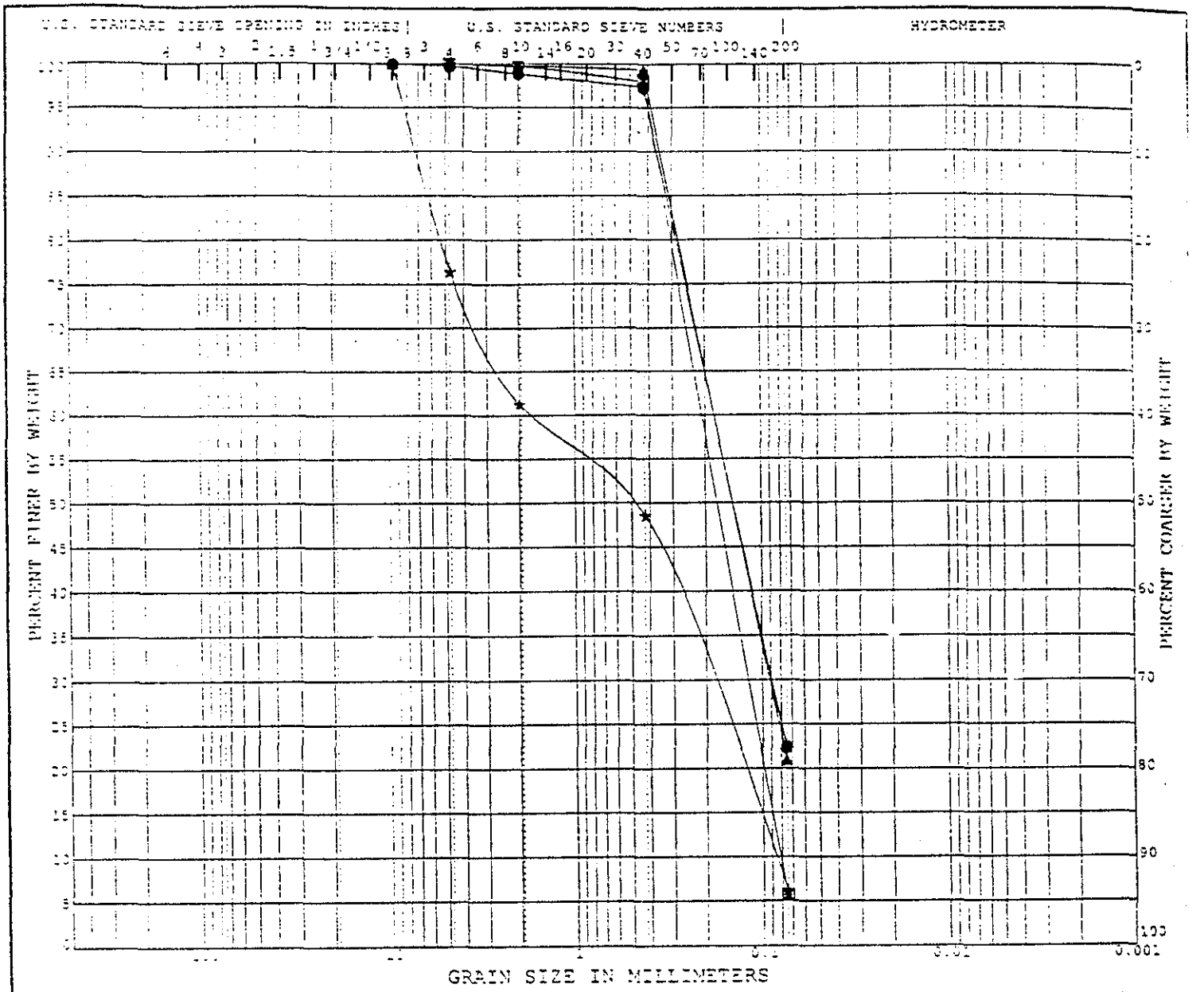

Boulders	Gravel	Sand		Silt	Clay
		coarse	fine		

	Boring No.	Depth	Lab. No.	AASHTO Soil Classification (Textural)	MC%	LL	PL	PI
●	B-3	11.00'		Sandy Loam, Gray (A-2-4)				
⧗	B-4	24.00'		Sand, Gray (A-3)				
▲	B-5	11.00'		Sandy Loam, Gray (A-2-4)				
★	B-5	19.00'		Sand and Gravel, Gray (A-1-b)				

	%< 3"	%Pass#10	%Pass#40	%Pass#200	%<.002mm	%Gravel	%Sand	%Silt	%Clay	%Colloid
●		98.9	97.3	22.4		1.1	76.5			
⧗		99.7	98.0	5.7		0.3	94.0			
▲		99.8	99.3	20.9		0.2	78.9			
★		61.3	48.5	6.2		38.7	55.1			

SEECO

Project: Proposed Detention Pond, Retaining Wall and Road Reconstruction

Location: 17 1st and Park, East Hazel Crest, IL

Date: 5-7-03 Job No: 7375G

GRADATION CURVES

MONITORING WELL INSTALLATION DIAGRAM

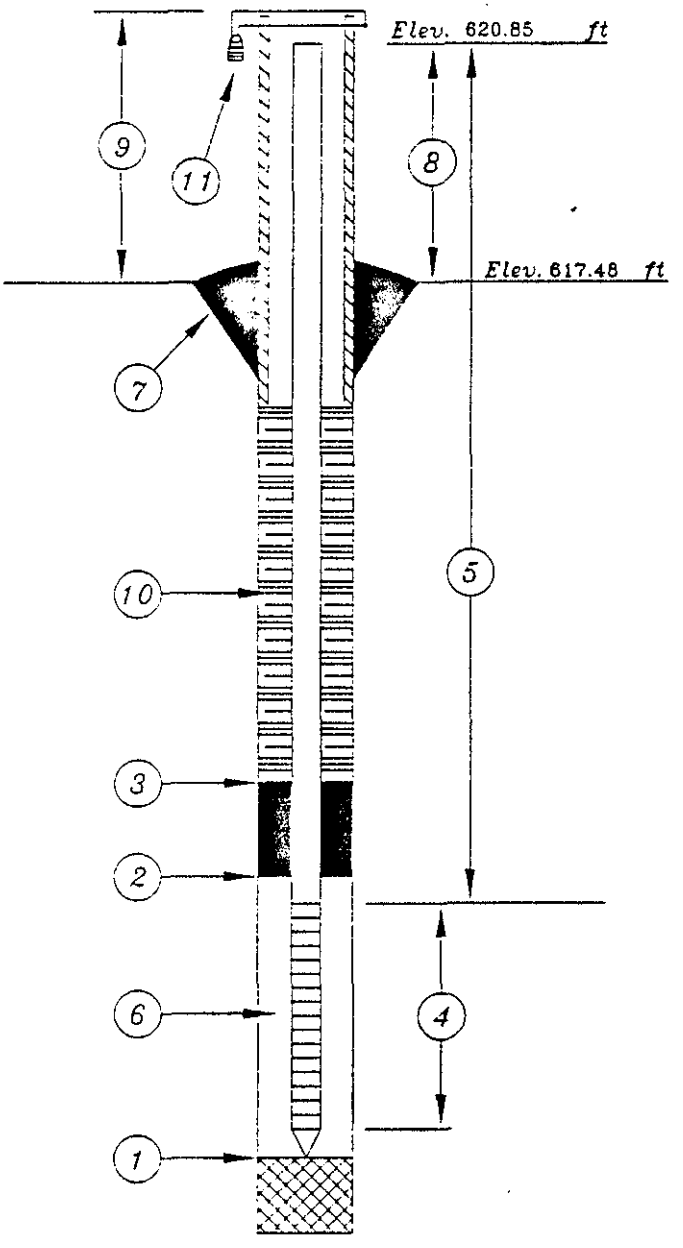

ALL DEPTH MEASUREMENT OF WELL DETAIL ARE FROM GROUND SURFACE UNLESS OTHERWISE INDICATED.

1. *DEPTH TO BOTTOM OF WELL POINT OR SLOTTED PIPE:* 24.18 *ft*
2. *DEPTH TO BOTTOM OF SEAL (IF INSTALLED):* 8.18 *ft*
3. *DEPTH TO TOP OF SEAL (IF INSTALLED):* 6.18 *ft*
4. *LENGTH OF WELL SCREEN:* 15.00 *ft*
   SCREEN TYPE: 0.010 SLOT PVC
5. *TOTAL LENGTH OF PIPE:* 12.55 *ft*
   DIAMETER: 2 *in TYPE:* PVC
6. *TYPE OF FILLER MATERIAL AROUND WELL POINT:* FILTER SAND
7. *CONCRETE CAP:* 1.0
8. *HEIGHT OF WELL CASING ABOVE GROUND:* 3.37 *ft*
9. *PROTECTIVE CASING:* METAL STAND UP
   HEIGHT ABOVE GROUND: 3.67 *ft*
10. *TYPE OF BACKFILL:* BENTONITE CHIPS
11. *LOCKING CAP:* 3.37

WATER LEVEL CHECKS

DATE	TIME	ELEV. OF WATER	REMARKS
6/17/2004	11:00	NA	
6/18/2004	08:00	613.96	
6/21/2004	08:00	613.72	
6/22/2004	08:00	613.67	
6/23/2004	08:00	613.55	
7/02/2004	08:00	612.92	
7/09/2004	08:00	612.90	
7/26/2004	08:00	612.28	
8/04/2004	08:15	612.64	

Client Robinson Engineering Ltd.

Project Geotechnical Engineering Design Services

Location 171st St Reconstruction & 7.0 Acrefeet Detention Pond, East Hazel Crest, IL

SEECO Consultants, Inc.
7350 Duvan Drive, Tinley Park, Illinois 60477

Job No.: 7375G1 | Date Installed: June 17, 2004

Approved: MK | Monitoring Well No. PB-06/MW-4

MONITORING WELL INSTALLATION DIAGRAM

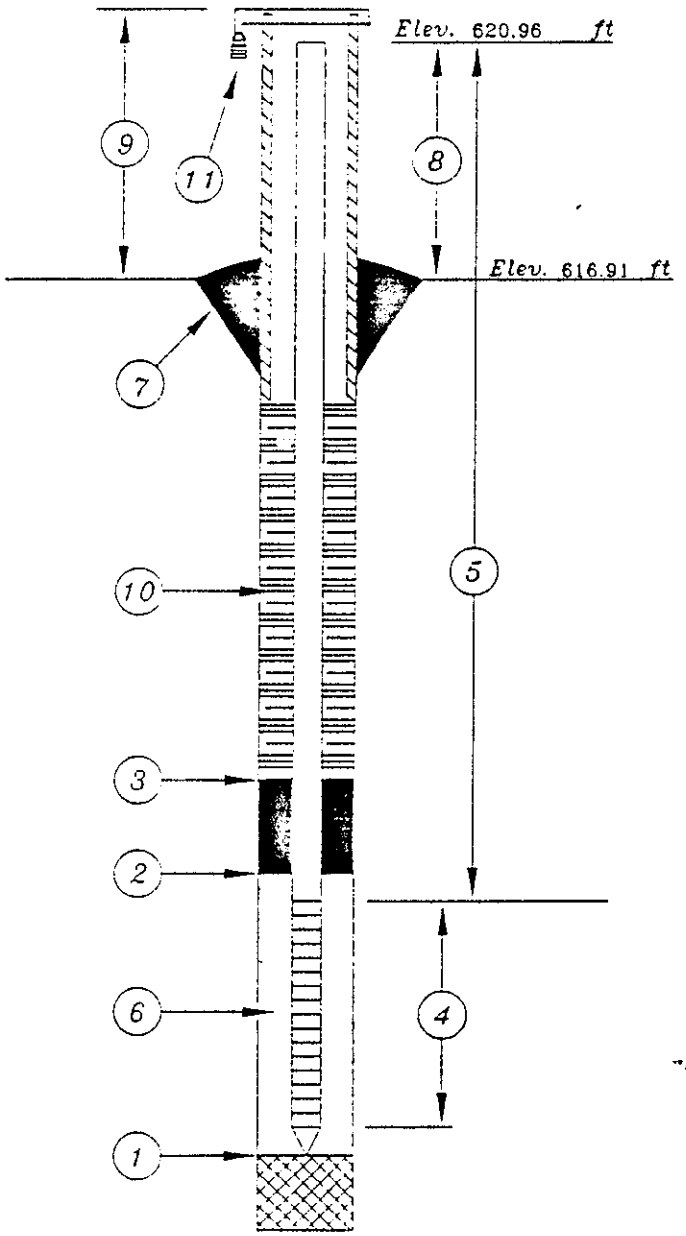

ALL DEPTH MEASUREMENT OF WELL DETAIL ARE FROM GROUND SURFACE UNLESS OTHERWISE INDICATED.

1. *DEPTH TO BOTTOM OF WELL POINT OR SLOTTED PIPE:* 23.43 *ft*
2. *DEPTH TO BOTTOM OF SEAL (IF INSTALLED):* 7.43 *ft*
3. *DEPTH TO TOP OF SEAL (IF INSTALLED):* 5.43 *ft*
4. *LENGTH OF WELL SCREEN:* 15.00 *ft*
   SCREEN TYPE: 0.010 SLOT PVC
5. *TOTAL LENGTH OF PIPE:* 12.48 *ft*
   DIAMETER: 2 *in TYPE:* PVC
6. *TYPE OF FILLER MATERIAL AROUND WELL POINT:* FILTER SAND
7. *CONCRETE CAP:* 1.0
8. *HEIGHT OF WELL CASING ABOVE GROUND:* 4.05 *ft*
9. *PROTECTIVE CASING:* METAL STAND UP
   HEIGHT ABOVE GROUND: 4.35 *ft*
10. *TYPE OF BACKFILL:* BENTONITE CHIPS
11. *LOCKING CAP:* 4.05

WATER LEVEL CHECKS

DATE	TIME	ELEV. OF WATER	REMARKS
6/17/2004	11:05	NA	
6/18/2004	08:05	617.48	
6/21/2004	08:05	613.62	
6/22/2004	08:05	613.61	
6/23/2004	08:05	613.46	
7/02/2004	08:05	612.78	
7/09/2004	08:05	612.71	
7/26/2004	08:05	612.18	
8/04/2004	08:20	612.87	

Client: Robinson Engineering Ltd.

Project: Geotechnical Engineering Design Services

Location: 171st St Reconstruction & 7.0 Acrefeet Detention Pond, East Hazel Crest, IL

SEECO Consultants, Inc.
7350 Duvan Drive, Tinley Park, Illinois 60477

Job No: 7375G1 | Date Installed: June 17, 2004

Approved: MK | Monitoring Well No PB-07/MW-5

Table 1: Groundwater Elevation Summary

SEECO Environmental Services, Inc.

Client: Robinson Engineering Ltd **Date: Shown**

Project: Geotechnical Engineering Design Services

171st St Reconstruction & 7.0 Acrefeet Detention Pond, East Hazel Crest, IL

Hazel Crest, IL

Project #: 7375G1

Monitor Well	RB-01/MW-1	RB-02/MW-2	RB-03/MW-3	PB-06/MW-4	PB-07/MW-5
	Groundwater Elevation (Feet)	Groundwater Elevation (Feet)	Groundwater Elevation (Feet)	Groundwater Elevation (Feet)	Groundwater Elevation (Feet)
June 17, 2004	NA	613.43	613.13	NA	NA
June 18, 2004	610.51	613.34	613.04	613.96	613.49
June 21, 2004	611.46	613.18	612.91	613.72	613.62
June 22, 2004	611.42	613.10	612.83	613.67	613.61
June 23, 2004	611.38	613.01	612.76	613.55	613.46
July 2, 2004	611.21	612.46	612.24	612.92	612.78
July 9, 2004	611.77	612.59	612.25	612.90	612.71
July 26, 2004	611.04	611.81	611.64	612.28	612.18
August 4, 2004	611.43	611.99	611.56	612.64	612.87

TOC Top Of Well Casing

NA Not Applicable as the well had not yet been installed upon this date

MW-4 HYDRAULIC CONDUCTIVITY TEST (BOUWER-RICE)

$K = 9.03 \times 10^{-4}$ cm/sec

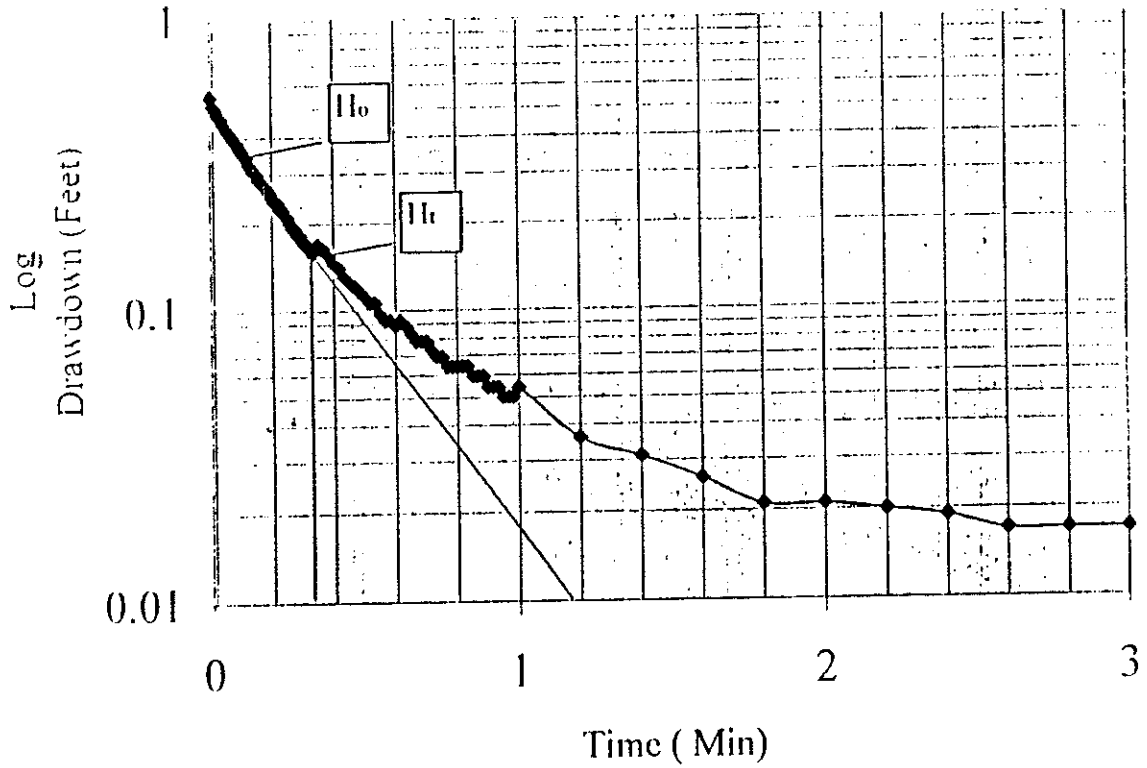

BOUWER-RICE METHOD

MW-4

Client: Robinson Engineering Ltd
Project: Geotechnical Engineering Design Services
171st St Reconstruction & 7.0 Acrefeet Detention Pond
Hazel Crest, IL
Project #: 7375G1

Bouwer Rice, 1956

$$K = \frac{r_c^2 \ \ln(R_e/R)}{2L_e} \ \frac{1}{t} \ \ln\left(\frac{H_o}{H_t}\right)$$

Time (Minutes)	Drawdown (Feet)	
0	0.551	
0.0083	0.513	
0.0166	0.499	
0.025	0.475	
0.0333	0.466	
0.0416	0.447	
0.05	0.433	
0.0583	0.419	
0.0666	0.409	
0.075	0.395	
0.0833	0.385	
0.0916	0.371	
0.1	0.362	t_o, H_o
0.1083	0.348	
0.1166	0.343	
0.125	0.324	
0.1333	0.315	
0.1416	0.305	
0.15	0.3	
0.1583	0.286	
0.1666	0.281	
0.175	0.272	
0.1833	0.267	
0.1916	0.258	
0.2	0.248	
0.2083	0.239	
0.2166	0.239	
0.225	0.225	
0.2333	0.225	
0.2416	0.215	
0.25	0.21	
0.2583	0.201	
0.2666	0.192	
0.275	0.192	
0.2833	0.182	

K = Hydraulic Conductivity, cm/sec

r_c = Radius of the well casing

= 0.0833 ft, or 1 inch

R_e = Effective Radial distance over which head is dissipated

R = Radius of gravel envelope

= 0.3333 ft, or 4 inches

L_e = Screen Length, = 15 ft

H_o = Drawdown at time t_o, as determined from Graph

H_o = 0.362 ft

t_o = 0.05 min

H_t = Drawdown at time $t = t\,final$

H_t = 0.158 ft

t = time since $H = H_o$, 60 sec/min

t = 0.333 min

h = saturated thickness of the aquifer, often = L_w is used

h = 20.42 feet

L_w = Distance from the Groundwater table to the well bottom

L_w = 20.42 feet

L_e/R = 45.0045

A, B, & C =

Dimensionless parameters plotted as a function of L_e/R

A = 2.85 B = 0.90 C = 2.5

$$\ln \frac{Re}{R} = \left[\frac{1.1}{\ln(L_w/R)} - \frac{A - B\ln[(h - L_w)/R]}{L_e/R}\right]^{-1}$$

If L_w is equal to h

$$\ln \frac{Re}{R} = \left[\frac{1.1}{\ln(L_w/R)} - \frac{C}{L_e/R}\right]^{-1}$$

= 3.09741 therefore,

$$K = \frac{r_c^2 \ \ln(R_e/R)}{2L_e} \ \frac{1}{t} \ \ln\left(\frac{H_o}{H_t}\right)$$

0.2916	0.182
0.3	0.173
0.3083	0.168
0.3166	0.168
0.325	0.163
0.3333	0.158 *t, H:*
0.35	0.168
0.3666	0.163
0.3833	0.154
0.4	0.144
0.4166	0.14
0.4333	0.13
0.45	0.125
0.4666	0.121
0.4833	0.116
0.5	0.111
0.5166	0.106
0.5333	0.106
0.55	0.097
0.5666	0.092
0.5833	0.092
0.6	0.088
0.6166	0.092
0.6333	0.088
0.65	0.083
0.6666	0.078
0.6833	0.078
0.7	0.078
0.7166	0.073
0.7333	0.069
0.75	0.069
0.7666	0.064
0.7833	0.064
0.8	0.064
0.8166	0.064
0.8333	0.064
0.85	0.059
0.8666	0.059
0.8833	0.059
0.9	0.054
0.9166	0.054
0.9333	0.054
0.95	0.05
0.9666	0.05
0.9833	0.05
1	0.054
1.2	0.036
1.4	0.031

K = 1.7820E-03 ft min

cm/sec = ft/min x 30.48cm ft x 1 min 60sec

K = 9.0527E-04 cm sec

1.6	0.026
1.8	0.021
2	0.021
2.2	0.02
2.4	0.019
2.6	0.017
2.8	0.017
3	0.017
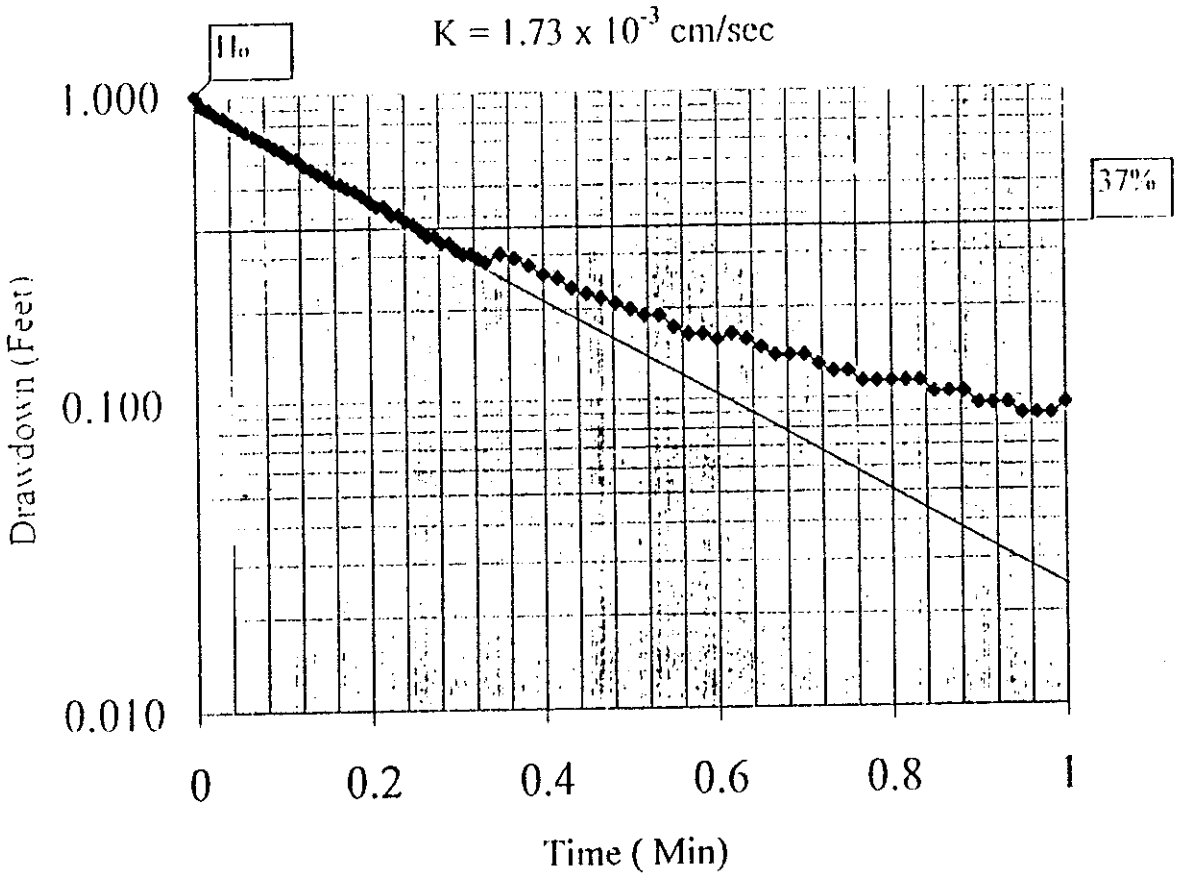
MW-4 HYDRAULIC CONDUCTIVITY TEST (HVORSLEV)