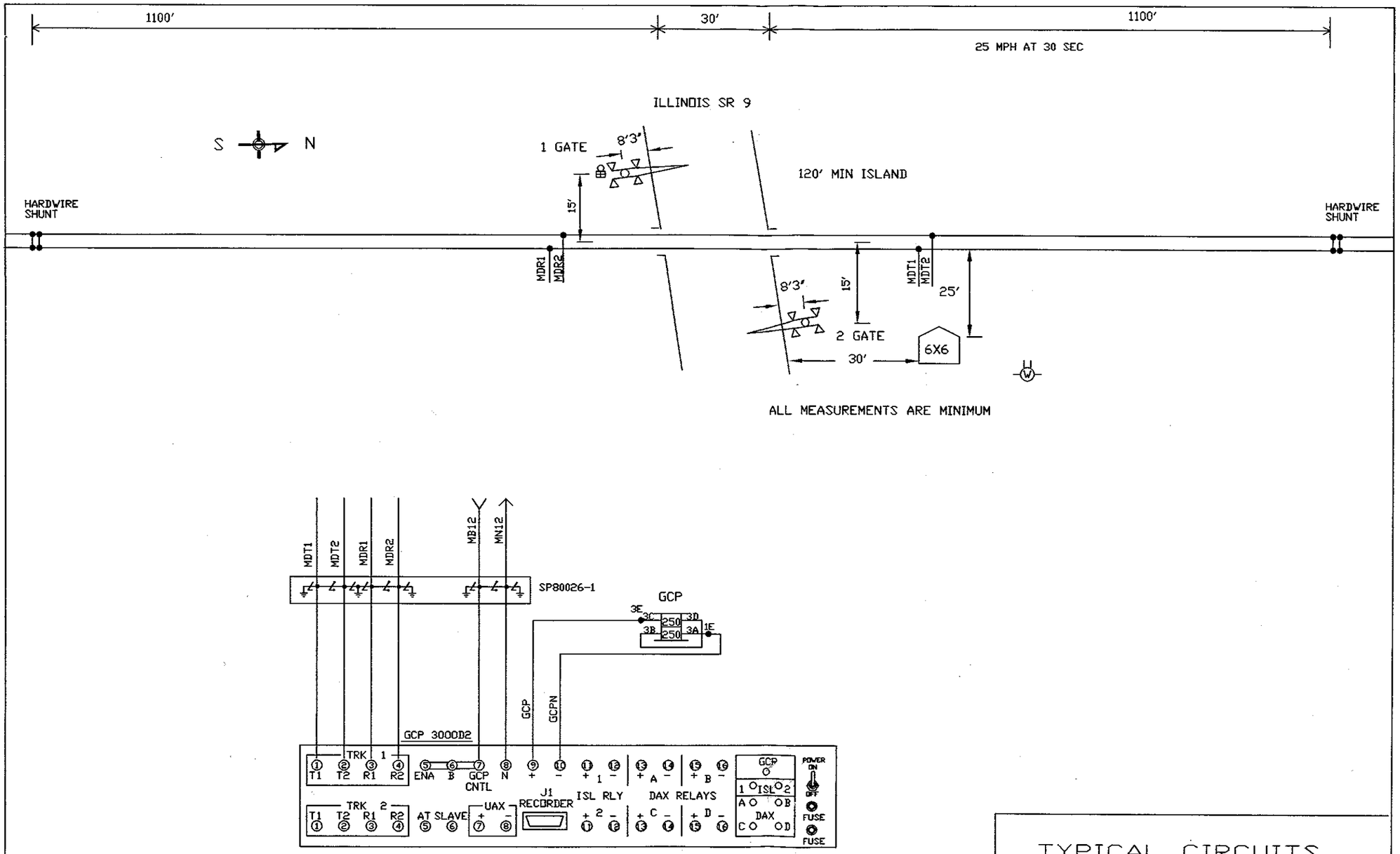

GCP 3000D2

GCP FREQ 430 HZ
ISLAND 1 CARRIER FREQ 7100 HZ

TYPICAL CIRCUITS

DUCK CREEK POWER PLANT
CROSSING WARNING PLAN
ILLINOIS SR-9
CANTON, ILLINOIS

DRAWN 12/6/04

SH 1 OF 5

PROGRAM OPTIONS

OPTION		
NUMBER OF TRACKS		1
FREQUENCY		430 HZ
UNI/BI DIRECTIONAL	TRACK 1	BI
	TRACK 2	NA
X-MIT LEVEL	TRACK 1	MAX
	TRACK 2	NA
PREDICTOR/MOTION SENSOR	TRACK 1	PRED
	TRACK 2	NA
WARNING TIME	TRACK 1	30
	TRACK 2	NA
APPROACH DISTANCE SELECTED	TRACK 1	1100
	TRACK 2	NA
APPROACH DISTANCE COMPUTED	TRACK 1	COMPUTED
	TRACK 2	NA
UAX PICKUP DELAY		NA
NUMBER OF DAXS		0
ISLAND DISTANCE		120
DAX A TRACK ASSIGNMENT		NA
DAX A DISTANCE		NA
DAX A WARNING TIME		NA
DAX B TRACK ASSIGNMENT		NA
DAX B DISTANCE		NA
DAX B WARNING TIME		NA
DAX C TRACK ASSIGNMENT		NA
DAX C DISTANCE		NA
DAX C WARNING TIME		NA
DAX D TRACK ASSIGNMENT		NA
DAX D DISTANCE		NA
DAX D WARNING TIME		NA
MASTER/SLAVE		MASTER
PASSWORD		DISABLED
RECORDER		INSTALLED
RS-232C BAUD RATE		9600
RS-232C DATA BITS		8
RS-232C STOP BITS		1
RS-232C PARITY		NONE
PRIME PRED. OFFSET	TRACK 1	0
	TRACK 2	0
PICKUP DELAY PRIME		20
PICKUP DELAY DAX	DAX A	NA
	DAX B	NA
	DAX C	NA
	DAX D	NA

MODULE REQUIREMENTS

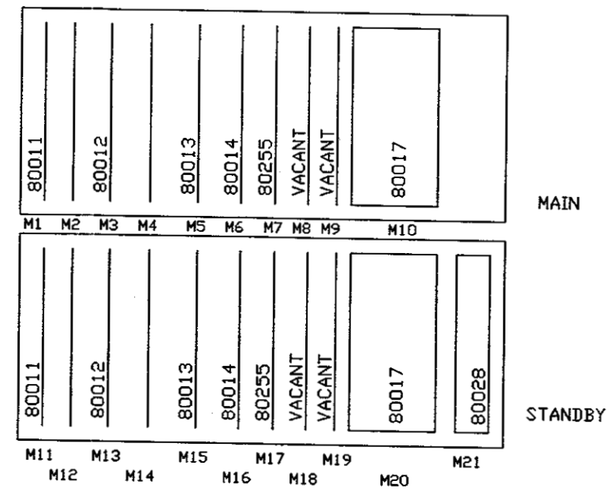

ON MODULE 80028 SET
DIP SWITCHES TO AUTO
TRANSFER TIME FOR 10 MIN.

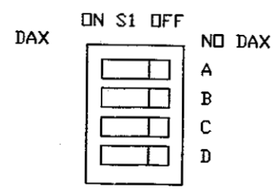

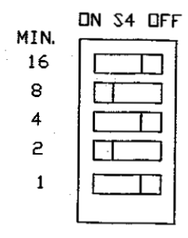

TYPICAL CIRCUITS

DUCK CREEK POWER PLANT
CROSSING WARNING PLAN
ILLINOIS SR-9
CANTON, ILLINOIS

DRAWN 12/6/04

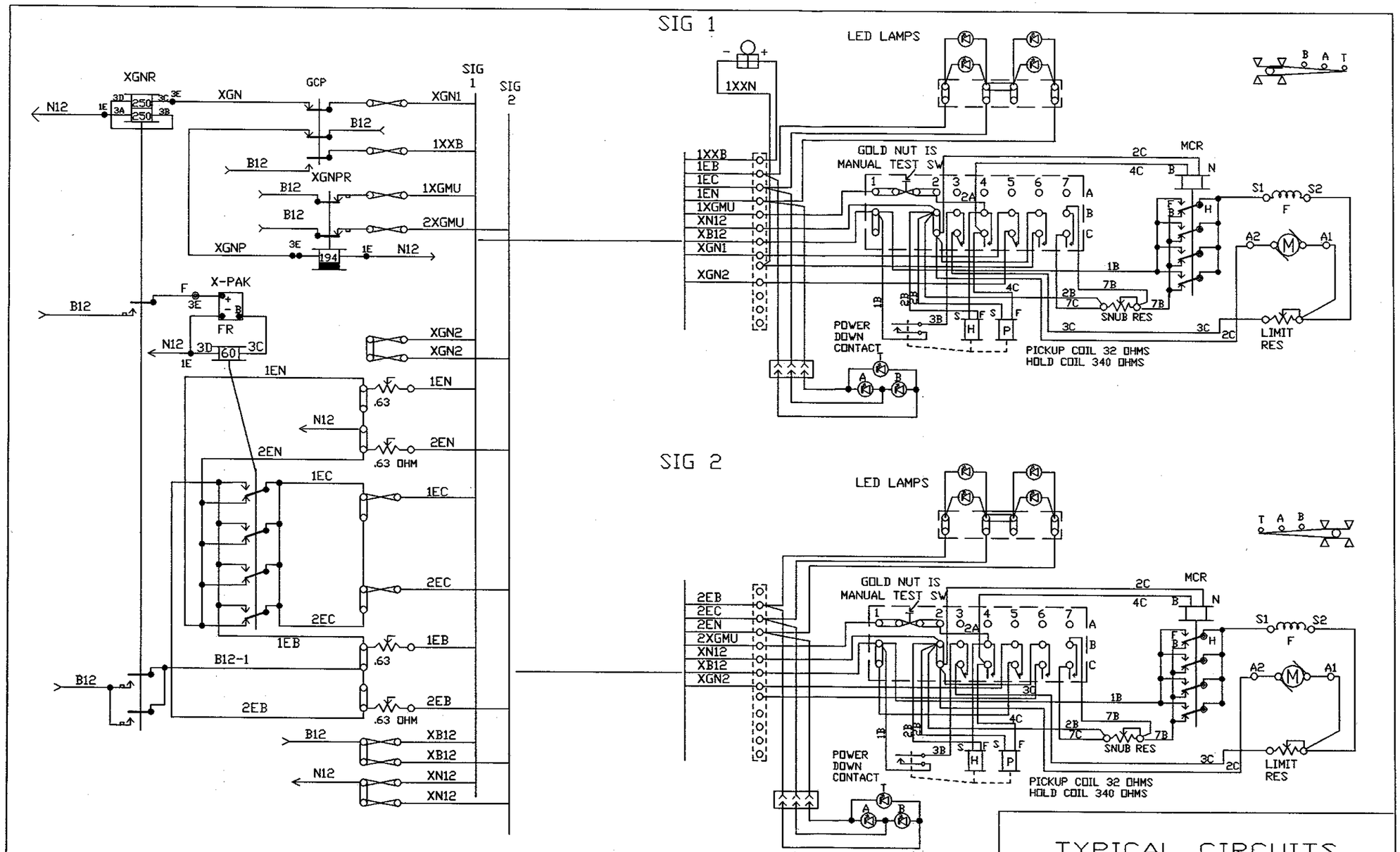

WESTERN-CULLEN-HAYES 3593-B

CONTACT	CLOSED	FUNCTION
3	45°TO 90°	MOTOR DOWN
4	0° TO 89°	MOTOR UP
5	80° TO 90°	IND VERT POS
6	5°-90°	BELL
7	0° TO 5°	SNUB

CIRCUIT SHOWN WITH GATE IN CLEAR POSITION

TYPICAL CIRCUITS

DUCK CREEK POWER PLANT
CROSSING WARNING PLAN
ILLINOIS SR-9
CANTON, ILLINOIS

DRAWN 12/6/04

SH 3 OF 5

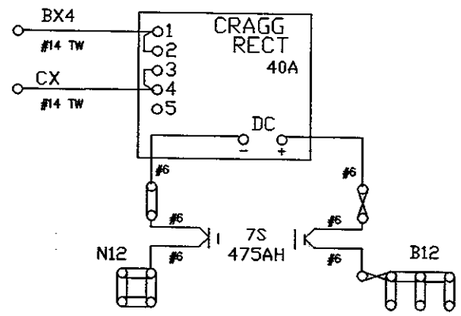

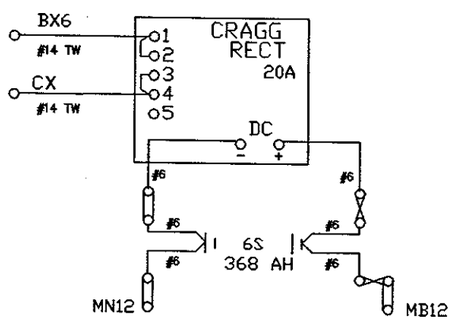

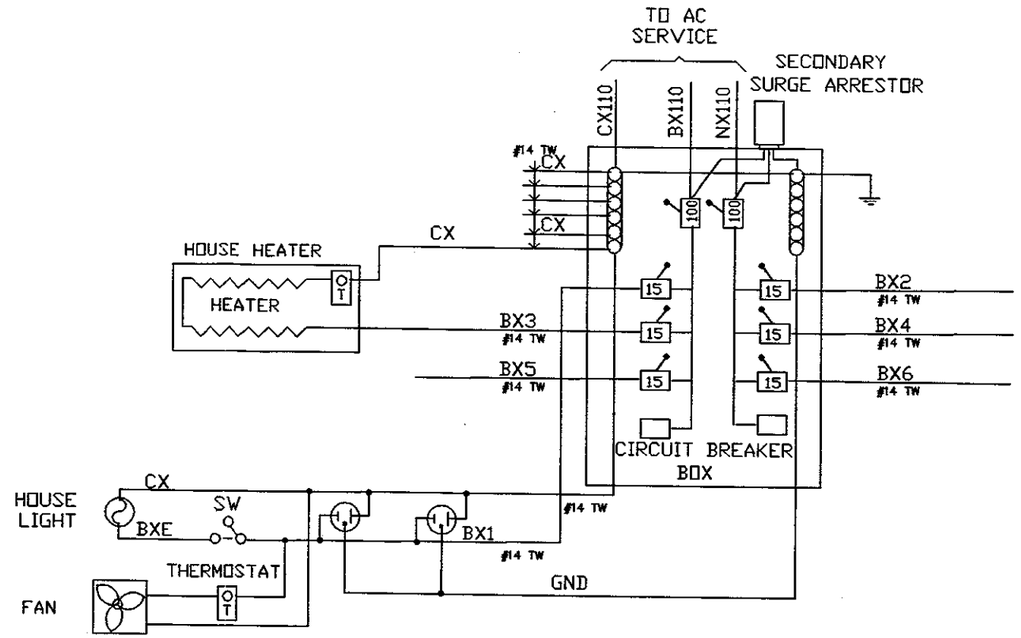

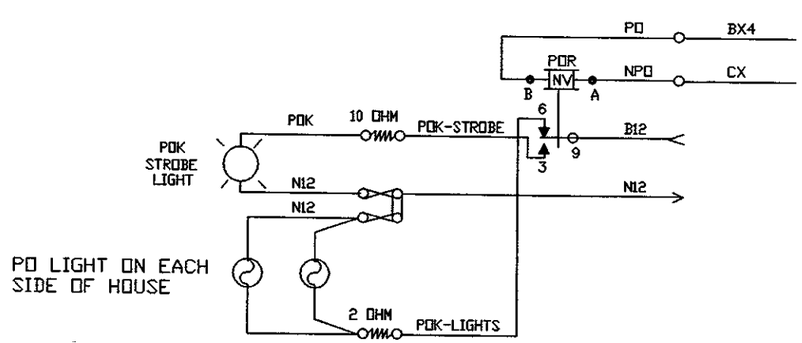

TYPICAL CIRCUITS

DUCK CREEK POWER PLANT
CROSSING WARNING PLAN
ILLINOIS SR-9
CANTON, ILLINOIS

DRAWN 12/6/04

SH 4 OF 5

LEFT SIDE OF BUNGALOW

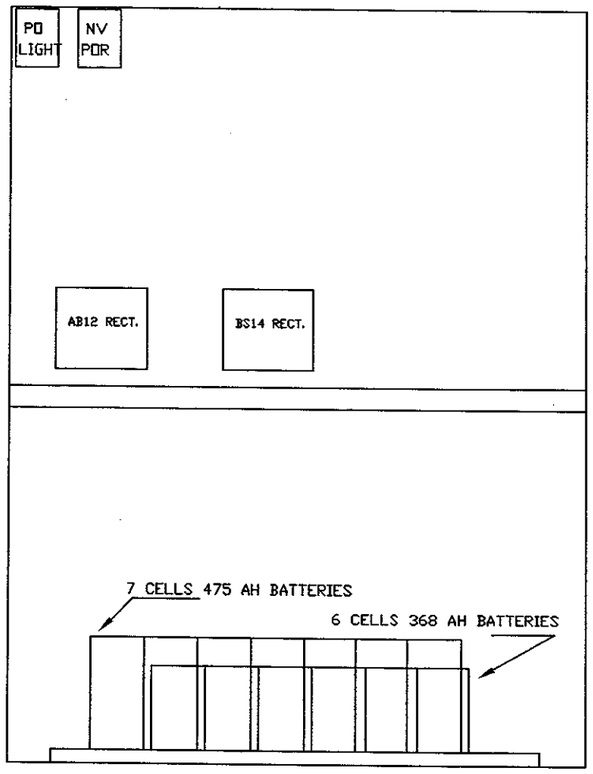

RIGHT SIDE OF BUNGALOW

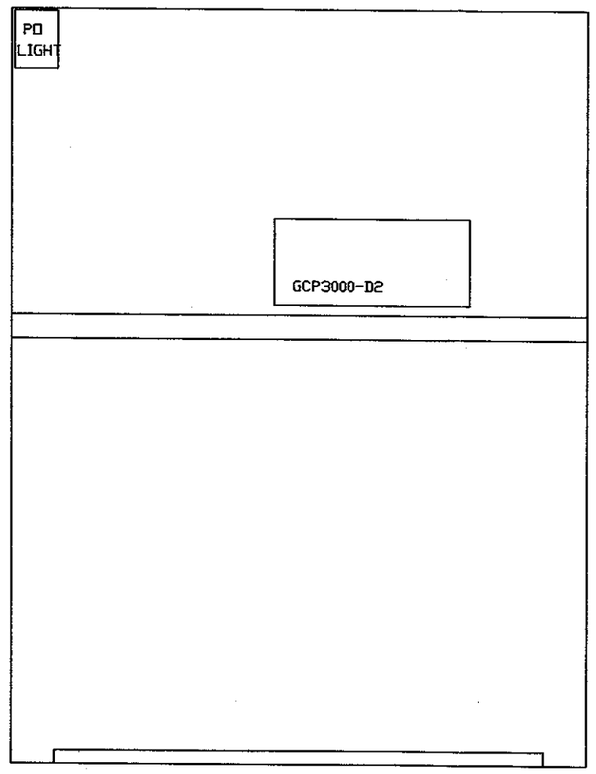

BACK SIDE OF BUNGALOW

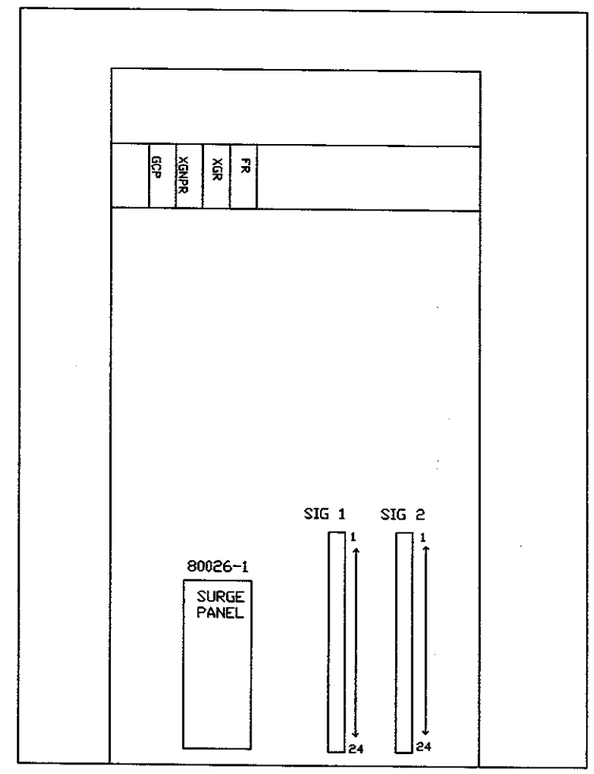

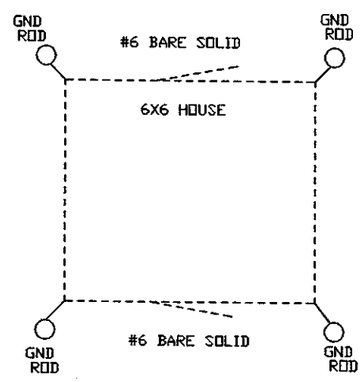

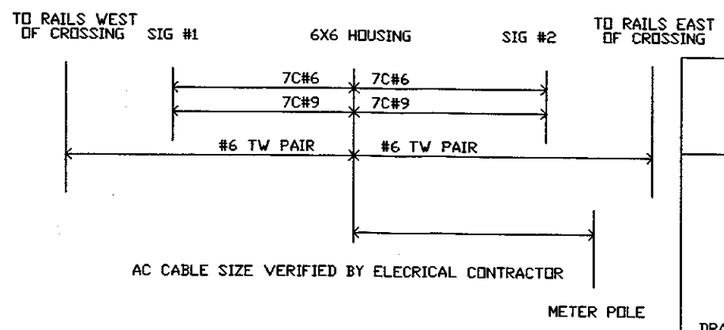

TYPICAL LAYOUT

DUCK CREEK POWER PLANT
CROSSING WARNING PLAN
ILLINOIS SR-9
CANTON, ILLINOIS

DRAWN 12/6/04

SH 5 OF 5