F.A.U. RTE.	SECTION	COUNTY	TOTAL SHEETS	SHEET NO.
3782 & 3783	98-00076-00-BR	COOK	29	1
FED. ROAD DIST. NO.	ILLINOIS	FED. AID PROJECT		

FOR INDEX OF SHEETS, SEE SHEET NO. 2

STATE OF ILLINOIS

DEPARTMENT OF TRANSPORTATION

DIVISION OF HIGHWAYS

PLANS FOR PROPOSED FEDERAL AID HIGHWAY

TRAFFIC DATA

ADT:

BURLINGTON AVE. = 2000 (2000)
HILLGROVE AVE. = 3200 (2000)

SPEED LIMIT:

BURLINGTON AVE. = 20 MPH
E.BOUND HILLGROVE AVE. = 20 MPH
W. BOUND HILLGROVE AVENUE = 25 MPH

SCALES
- PLAN 1" = 20'
- PROFILE HORIZ. 1" = 20'
- PROFILE VERT. 1" = 5'
- CROSS SECTIONS 1" = 10' HORIZ. 1" = 5' VERT.

F.A.U. ROUTE 3782 (HILLGROVE AVE.) & 3783 (BURLINGTON AVE.) AT CLAUSEN AVENUE

SECTION: 98–00076–00–BR

PEDESTRIAN UNDERPASS CONSTRUCTION

PROJECT: HPD–1259(003)

VILLAGE OF WESTERN SRPINGS

COOK COUNTY

C–91–248–02

LOCATION OF SECTION INDICATED THUS: –

PROJECT LOCATED IN VILLAGE OF WESTERN SPRINGS

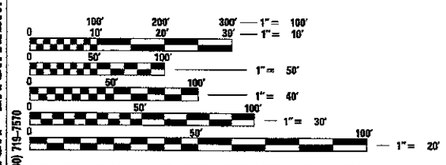

FULL SIZE PLANS HAVE BEEN PREPARED USING STANDARD ENGINEERING SCALES. REDUCED SIZED PLANS WILL NOT CONFORM TO STANDARD SCALES. IN MAKING MEASUREMENTS ON REDUCED PLANS, THE ABOVE SCALES MAY BE USED.

J.U.L.I.E.
JOINT UTILITY LOCATION INFORMATION FOR EXCAVATION
1–800–892–0123

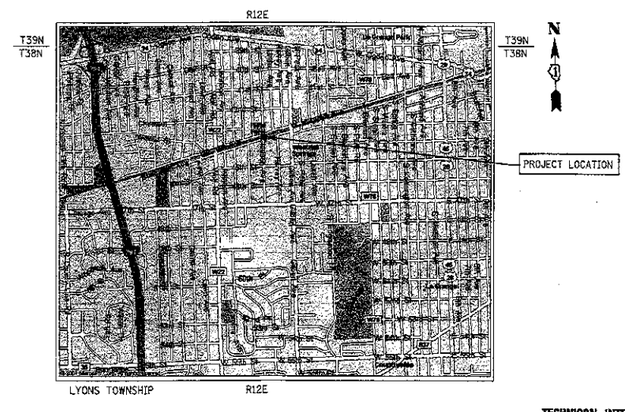

LOCATION MAP
SCALE: NTS

GROSS & NET LENGTH OF PROJECT: 141.05 FT. (0.03 MILES)

PRELIMINARY PLANS
SUBJECT TO REVISION
02/02/04

VILLAGE OF WESTERN SPRINGS

APPROVED _____ 2004

_____
DIRECTOR OF MUNICIPAL SERVICES

STATE OF ILLINOIS
DEPARTMENT OF TRANSPORTATION

APPROVED: _____ 2004

_____
BUREAU CHIEF OF LOCAL ROAD AND STREETS

APPROVED: _____ 2004

_____
DISTRICT ENGINEER

PRINTED BY AUTHORITY OF THE STATE OF ILLINOIS

TECHNICON INTERNATIONAL
1625 SHERIDAN ROAD, SUITE 307
WILMETTE, IL 60091
(847) 514–1045

JACOBS ASSOCIATES
ENGINEERS/CONSULTANTS
465 CALIFORNIA STREET
SAN FRANCISCO, CA 94104–1824
(415) 434–1822

JAMES J. BENES & ASSOCIATES
CONSULTING ENGINEERS
950 WARRENVILLE ROAD, SUITE 101
LISLE, IL 60532
(630) 719–7570

IDOT FEDERAL AID DESIGN ENGINEER:
CONSULTANT: JAMES J. BENES & ASSOCIATES, INC. (630) 719–7570

CONTRACT NO.
DESIGN DESIGNATION:

F.A.U. RTE.	SECTION	COUNTY	TOTAL SHEETS	SHEET NO.
3782 & 3783	98-00076-00-BR	COOK	29	2
STA.		TO STA.		
FED. ROAD DIST. NO.	ILLINOIS	FED. AID PROJECT		

INDEX OF SHEETS

1	TITLE SHEET
2	INDEX OF SHEETS, LIST OF STATE STANDARDS, GENERAL NOTES AND SCHEDULE OF QUANTITIES
3	SUMMARY OF QUANTITIES
4	ALIGNMENT AND BENCH MARKS
5	SITE PLAN
6 - 7	GEOMETRIC AND DRAINAGE PLAN
8 - 9	FINAL GRADIN PLAN
10	LIGHTING PLAN
11 - 12	RETAINING WALLS PLAN
13	RETAINING WALL TYPICAL SECTIONS
14	SHORING WALL PLAN (BY OTHERS)
15	SHORING WALL DETAILS (BY OTHERS)
16	TYPICAL U-WALL SECTION PLAN
17 - 20	ARCHITECTURAL PLANS
21 - 24	BRIDGE PLANS (BY OTHERS)
25 - 28	CONSTRUCTION DETAILS
29	DISTRICT DETAILS

LIST OF STATE STANDARDS

424001-02	SIDEWALK RAMPS ACCESSIBLE TO THE DISABLED
602301	INLET, TYPE A
606001-01	CONCRETE CURB AND COMBINATION CONCRETE CURB AND GUTTER
701501-02	URBAN LANE CLOSURE, 2L, 2W, UNDIVIDED
701801-03	LANE CLOSURE MULTILANE 1W OR 2W CROSSWALK OR SIDEWALK CLOSURE
702001-02	TRAFFIC CONTROL DEVICES
720001	SIGN PANEL MOUNTING DETAILS
720006	SIGN PANEL ERECTION DETAILS
720011	METAL POSTS FOR SIGNS, MARKERS & DELINEATORS
729001	APPLICATIONS OF TYPES A & B METAL POSTS (FOR SIGNS AND MARKERS)
805001	ELECTRICAL SERVICE INSTALLATION DETAILS
814001	CONCRETE HANDHOLES
878001	CONCRETE FOUNDATION DETAILS
000001-04	STANDARD SYMBOLS, ABBREVIATIONS AND PATTERNS

GENERAL NOTES

1. ACCESS TO LOCAL RESIDENCES AND BUSINESSES SHALL BE MAINTAINED DURING CONSTRUCTION.
2. THE CONTRACTOR SHALL GIVE THE VILLAGE OF WESTERN SPRINGS AND JAMES J. BENES AND ASSOCIATES THREE (3) WORKING DAYS NOTICE PRIOR TO THE COMMENCEMENT OF WORK. (JAMES J. BENES AND ASSOCIATES, INC.: (630) 719-7570)
3. THE CONTRACTOR SHALL CONTACT "J.U.L.I.E." AT (800) 892-0123 FOR VILLAGE OWNED WATER, SANITARY, STORM SEWER AND STREET LIGHT UTILITY LOCATES.
4. ALL ELEVATIONS ARE ON U.S.G.S. DATUM.
5. DO NOT SCALE PLANS FOR CONSTRUCTION DIMENSIONS.
6. NEITHER THE ENGINEER, NOR THE OWNER, SHALL ASSUME ANY OF THE RESPONSIBILITIES OF THE CONTRACTOR'S SUPERINTENDENT OR OF SUBCONTRACTORS. ADDITIONALLY, NEITHER THE ENGINEER, NOR THE OWNER, SHALL ADVISE ON, OR ISSUE DIRECTIONS CONCERNING, ASPECTS OF CONSTRUCTION MEANS, METHODS, TECHNIQUES, SEQUENCES OR PROCEDURES, OR SAFETY PRECAUTIONS AND/OR PROGRAMS IN CONNECTION WITH THE WORK.
7. THE LOCATIONS OF PUBLIC OR PRIVATE UTILITIES SHOWN ON THE PLANS ARE APPROXIMATE AND THEIR ACCURACY IS NOT GUARANTEED. THE CONTRACTOR SHALL VERIFY THE EXACT LOCATION AND ELEVATION OF ALL UTILITIES. THE CONTRACTOR SHALL REPORT ANY ENCOUNTERED DISCREPANCIES TO THE ENGINEER AT ONCE. THE CONTRACTOR SHALL TAKE DUE CARE IN ALL PHASES OF CONSTRUCTION TO PROTECT ANY UTILITIES WHICH MAY BE AFFECTED BY THE WORK. ANY DAMAGE TO EXISTING UTILITIES SHALL BE REPAIRED AT THE CONTRACTOR'S EXPENSE.
8. THE CONTRACTOR SHALL KEEP THE CONSTRUCTION AREA FREE OF DEBRIS AND/OR OBJECTIONABLE MATERIALS DURING CONSTRUCTION. THE CONTRACTOR SHALL INSPECT THE SITE DAILY FOR DEBRIS ON THE ROADWAY SURFACE.
9. THE CONTRACTOR SHALL MAINTAIN ALL EXISTING DRAINAGE FACILITIES DURING CONSTRUCTION AND SHALL REPAIR ANY DRAINAGE FACILITIES DAMAGED DURING CONSTRUCTION. THIS WORK SHALL BE INCLUDED IN THE CONTRACT AND WILL NOT BE PAID FOR SEPARATELY.
10. THE CONTRACTOR SHALL VERIFY THE ELEVATIONS OF EXISTING STORM SEWERS PRIOR TO THE CONSTRUCTION OF PROPOSED STORM SEWER.
11. THE RELOCATION OF SIGNS WILL NOT BE PAID FOR SEPARATELY BUT SHALL BE INCLUDED IN THE COST OF THE CONTRACT.
12. BEFORE STARTING ANY EXCAVATION, THE CONTRACTOR SHALL CALL "J.U.L.I.E." AT (800) 892-0123 FOR FIELD LOCATIONS OF BURIED ELECTRIC, TELEPHONE, GAS, SEWERS AND WATER UTILITIES. (48 HOUR NOTIFICATION IS REQUIRED.)
13. THE CONTRACTOR SHALL COORDINATE ALL CONSTRUCTION ACTIVITIES WITH ALL UTILITY COMPANIES.
14. THE CONTRACTOR WILL NOT BE ALLOWED TO SET UP A YARD OR FIELD OFFICE ON STATE PROPERTY WITHOUT WRITTEN PERMISSION FROM THE ILLINOIS DEPARTMENT OF TRANSPORTATION.
15. THE CONTRACTOR SHALL PROVIDE AND INSTALL TWO (2) WEIGHTED SAND BAGS FOR EACH TYPE I OR TYPE II BARRICADE USED, ONE WEIGHTED SAND BAG ACROSS EACH BOTTOM RAIL.

SCHEDULE OF QUANTITIES

TREE REMOVAL (6 TO 15 UNIT DIA)

STATION	OFFSET (FOOT)	QUANTITY (UNIT)
5+45	78' LT	12
5+52	10' LT	15
5+54	20' RT	6
5+54	20' RT	6
5+54	20' RT	9
5+55	24' LT	9
5+57	30' LT	12
5+57	30' LT	12
5+57	30' LT	12
5+58	68' LT	6
5+58	68' LT	15
5+58	8' RT	15
5+58	8' RT	15
6+41	42' LT	6
6+45	30' LT	6
6+46	20' LT	9
6+46	61' LT	6
6+53	48' LT	9
TOTAL QUANTITY =		180

MANHOLES TO BE RECONSTRUCTED

STATION	OFFSET (FEET)	QUANTITY (EACH)
5+40	61' LT	1
5+43	63' LT	1
6+51	30' LT	1
TOTAL QUANTITY =		3

MANHOLES TO BE ADJUSTED

STATION	OFFSET (FEET)	QUANTITY (EACH)
5+31	86' LT	1
5+35	2' RT	1
6+51	31' LT	1
TOTAL QUANTITY =		3

TREE REMOVAL (OVER 15 UNIT DIA)

STATION	OFFSET (FOOT)	QUANTITY (UNIT)
5+56	20' LT	18
TOTAL QUANTITY =		18

VALVE VAULTS TO BE RECONSTRUTED

STATION	OFFSET (FEET)	QUANTITY (EACH)
6+92	14' RT	1
TOTAL QUANTITY =		1

EARTHWORK

LOCATION	REMOVAL & DISPOSAL OF UNSUITABLE MAT. (CU YD)	STRUCTURAL EXCAVATION (CU YD)
SOUTH APPROACH	346	0
U-STRUCTURE	641	641
NORTH APPROACH	313	0
TOTAL QUANTITY =	1,300	641

REVISIONS	
NAME	DATE

ILLINOIS DEPARTMENT OF TRANSPORTATION
F.A.U. ROUTES 3782 & 3783

GENERAL NOTES,
INDEX OF SHEETS, STATE STANDARDS,
AND SCHEDULE OF QUANTITIES

SCALE: NTS — DRAWN BY: SMP
DATE: 02/02/04 — CHECKED BY: BDH

F.A.U. RTE.	SECTION	COUNTY	TOTAL SHEETS	SHEET NO.
3782 & 3783	98-00076-00-BR	COOK	29	3
STA.		TO STA.		
FED. ROAD DIST. NO.	ILLINOIS	FED. AID PROJECT		

SUMMARY OF QUANTITIES

CODE NO.	ITEM	UNIT	TOTAL	SFTY-2A
20100110	TREE REMOVAL (6 TO 15 UNITS DIAMETER)	UNIT	180	180
20100210	TREE REMOVAL (OVER 15 UNITS DIAMETER)	UNIT	18	18
20201200	REMOVAL AND DISPOSAL OF UNSUITABLE MATERIAL	CU YD	1,300	1,300
20700110	POROUS GRANULAR EMBANKMENT	CU YD	307	307
20800150	TRENCH BACKFILL	CU YD	52	52
21101615	TOPSOIL FURNISH AND PLACE, 4"	SQ YD	1,010	1,010
25000400	NITROGEN FERTILIZER NUTRIENT	POUND	19	19
25000500	PHOSPHORUS FERTILIZER NUTRIENT	POUND	19	19
25000600	POTASSIUM FERTILIZER NUTRIENT	POUND	19	19
25200100	SODDING	SQ YD	1,010	1,010
25200200	SUPPLEMENTAL WATERING	UNIT	21	21
42400300	PORTLAND CEMENT CONCRETE SIDEWALK 5 INCH	SQ FT	4,700	4,700
44000500	COMBINATION CURB AND GUTTER REMOVAL	FOOT	112	112
50200100	STRUCTURAL EXCAVATION	CU YD	641	641
50300225	CONCRETE STRUCTURES	CU YD	210	210
50300300	PROTECTIVE COAT	SQ YD	551	551
50800105	REINFORCEMENT BARS	POUND	41,171	41,171
51100100	SLOPEWALL 4 INCH	SQ YD	56	56
550A0050	STORM SEWERS, CLASS A, TYPE 1 12"	FOOT	50	50
550A0340	STORM SEWERS, CLASS A, TYPE 2 12"	FOOT	40	40
60255500	MANHOLES TO BE ADJUSTED	EACH	3	3
60257900	MANHOLES TO BE RECONSTRUCTED	EACH	3	3
60266100	VALVE VAULTS TO BE RECONSTRUCTED	EACH	1	1
60603800	COMBINATION CONCRETE CURB AND GUTTER, TYPE B-6.12	FOOT	55	55
60604400	COMBINATION CONCRETE CURB AND GUTTER, TYPE B-6.18	FOOT	57	57
70101700	TRAFFIC CONTROL AND PROTECTION	L SUM	1	1

SUMMARY OF QUANTITIES

CODE NO.	ITEM	UNIT	TOTAL	SFTY-2A
78000600	THERMOPLASTIC PAVEMENT MARKING - LINE 12"	FOOT	84	84
78008150	POLYUREA PAVEMENT MARKING - LINE 12"	FOOT	104	104
80400100	ELECTRIC SERVICE INSTALLATION	EACH	1	1
80700110	GROUND ROD, 3/4" DIA. X 10 FT	EACH	7	7
81000600	CONDUIT IN TRENCH, 2" DIA., GALVANIZED STEEL	FOOT	125	125
81027040	POLYETHLENE DUCT, BORED AND PULLED 1 1/4"	FOOT	1,100	1,100
81400100	HANDHOLE	EACH	2	2
81500200	TRENCH AND BACKFILL FOR ELECTRICAL WORK	FOOT	125	125
81702120	ELECTRIC CABLE IN CONDUIT, 600 V (XLP-TYPE USE)	FOOT	2,750	2,750
81702150	ELECTRIC CABLE IN CONDUIT, 600 V (XLP-TYPE USE)	FOOT	1,900	1,900
83600200	LIGHT POLE FOUNDATION, 24" DIAMETER	FOOT	21	21
83600215	LIGHT POLE FOUNDATION, 24" DIAMETER, OFFSET	FOOT	12	12
87800215	CONCRETE FOUNDATION, TYPE D	EACH	1	1
Z0013798	CONTRUCTION LAYOUT	L SUM	1	1
Z0048665	RAILROAD PROTECTIVE LIABILITY INSURANCE	L SUM	1	1
Z0076600	TRAINEES [Y080]	HOUR	500	500
	INLETS, TYPE A, TYPE 1 FRAME SPECIAL GRATE	EACH	2	2
	PLANTER CURB	FOOT	185	185
	ORNIAMENTAL LIGHT POLE - DOUBLE LUMINAIRE	EACH	4	4
	LIGHTING CONTROLLER, SPECIAL	EACH	1	1
	FORM LINER	SQ FT	1,700	1,700
	BOX BEAM	FOOT	24	24
	SECURITY SYSTEM	L SUM	1	1
	UNDERPASS LIGHTING SYSTEM	L SUM	1	1
	HANDRAIL	FOOT	320	320
	ORNIAMENTAL HANDRAIL	FOOT	22	22
	ORNIAMENTAL RAILING	FOOT	240	240

REVISIONS	
NAME	DATE

ILLINOIS DEPARTMENT OF TRANSPORTATION
F.A.U. ROUTES 3782 & 3783

SUMMARY OF QUANTITIES

SCALE: NTS
DATE: 02/02/04

DRAWN BY: SMP
CHECKED BY: BDH

F.A.U. RTE.	SECTION	COUNTY	TOTAL SHEETS	SHEET NO.
3782 & 3783	98-00076-00-BR	COOK	29	4
STA.		TO STA.		
FED. ROAD DIST. NO.	ILLINOIS	FED. AID PROJECT		

CONTROL POINTS

CONTROL POINT NO.	LOCATION STATION	LOCATION OFFSET	NORTHING	EASTING	ELEVATON	DESCRIPTION
41	-	-	9,483.4687	18,954.6784	655.13	CUT CROSS
80	-	-	9,546.6391	1,9175.1323	656.28	CUT CROSS
81	-	-	9,613.9540	19,447.5130	659.02	CUT CROSS

BENCH MARK SUMMARY

BM#1: NORTHWEST FLANGE BOLT ON FIRE HYDRANT. FIRE HYDRANT AT THE SOUTHWEST CORNER OF BURLINGTON AVENUE AND CLAUSEN AVENUE.
ELEVATION = 656.14

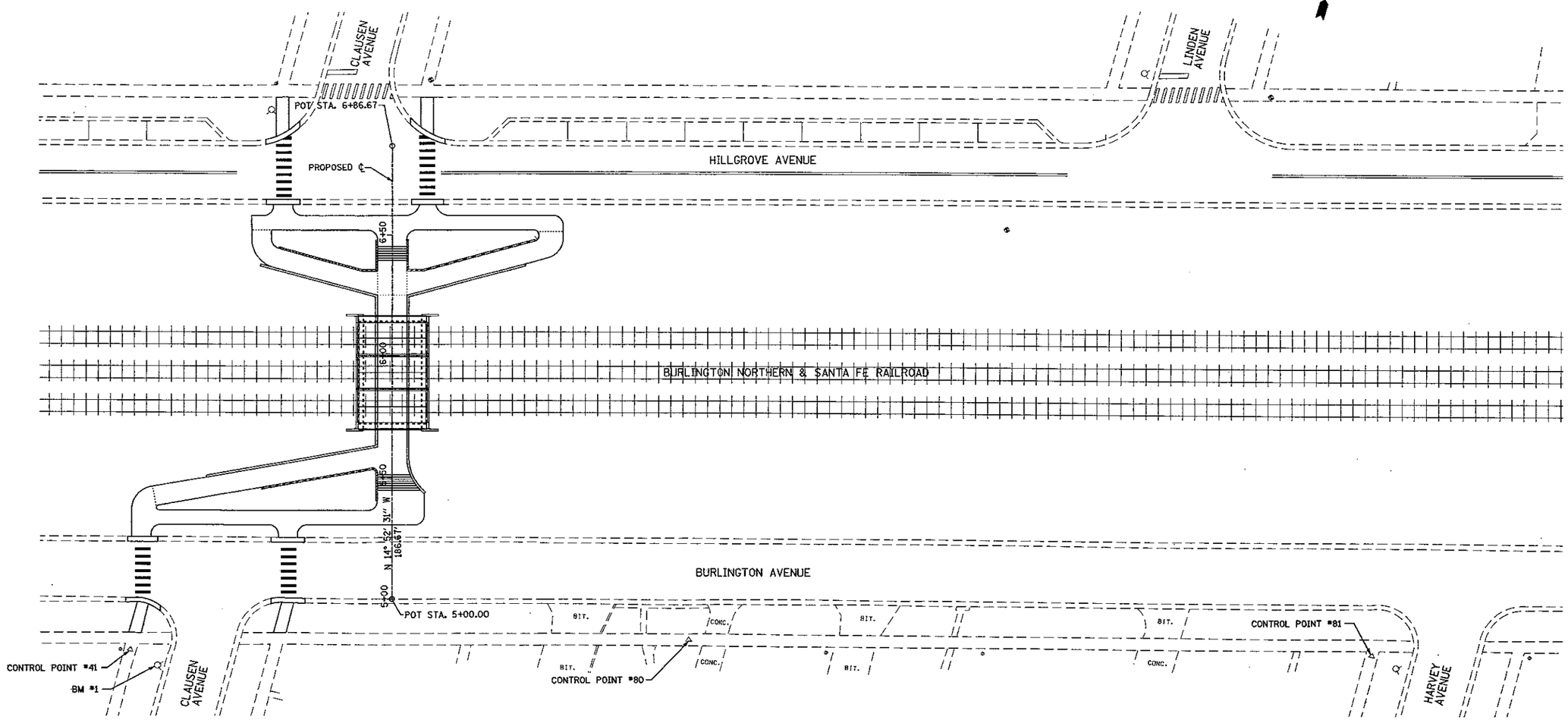

PROPOSED CURVE NO.	Δ	R	T	L	E	SE	P.O.T./PI STATION	P.O.T./PI COORDINATE NORTHING	P.O.T./PI COORDINATE EASTING	PC STATION	P.C. COORDINATES NORTHING	P.C. COORDINATES EASTING	PT STATION	P.T. COORDINATES NORTHING	P.T. COORDINATES EASTING
							5+00.00 6+86.67	9,531.4962 9,711.9073	19,053.0919 19,005.1719						

REVISIONS NAME	DATE

ILLINOIS DEPARTMENT OF TRANSPORTATION
F.A.U. ROUTES 3782 & 3783

ALIGNMENT AND BENCH MARKS

SCALE: 1"=20'
DATE: 02/02/04
DRAWN BY: SMP
CHECKED BY: BDH

JAMES J. BENES & ASSOCIATES, INC.
950 Warrenville Road, Suite 101, Lisle, Illinois 60532
Tel. (630) 719-7570 Fax (630) 719-7589

F.A.U. RTE.	SECTION	COUNTY	TOTAL SHEETS	SHEET NO.
3183	98-00076-00-BR	COOK	29	5
STA.		TO STA.		
FED. ROAD DIST. NO.	ILLINOIS	FED. AID PROJECT		

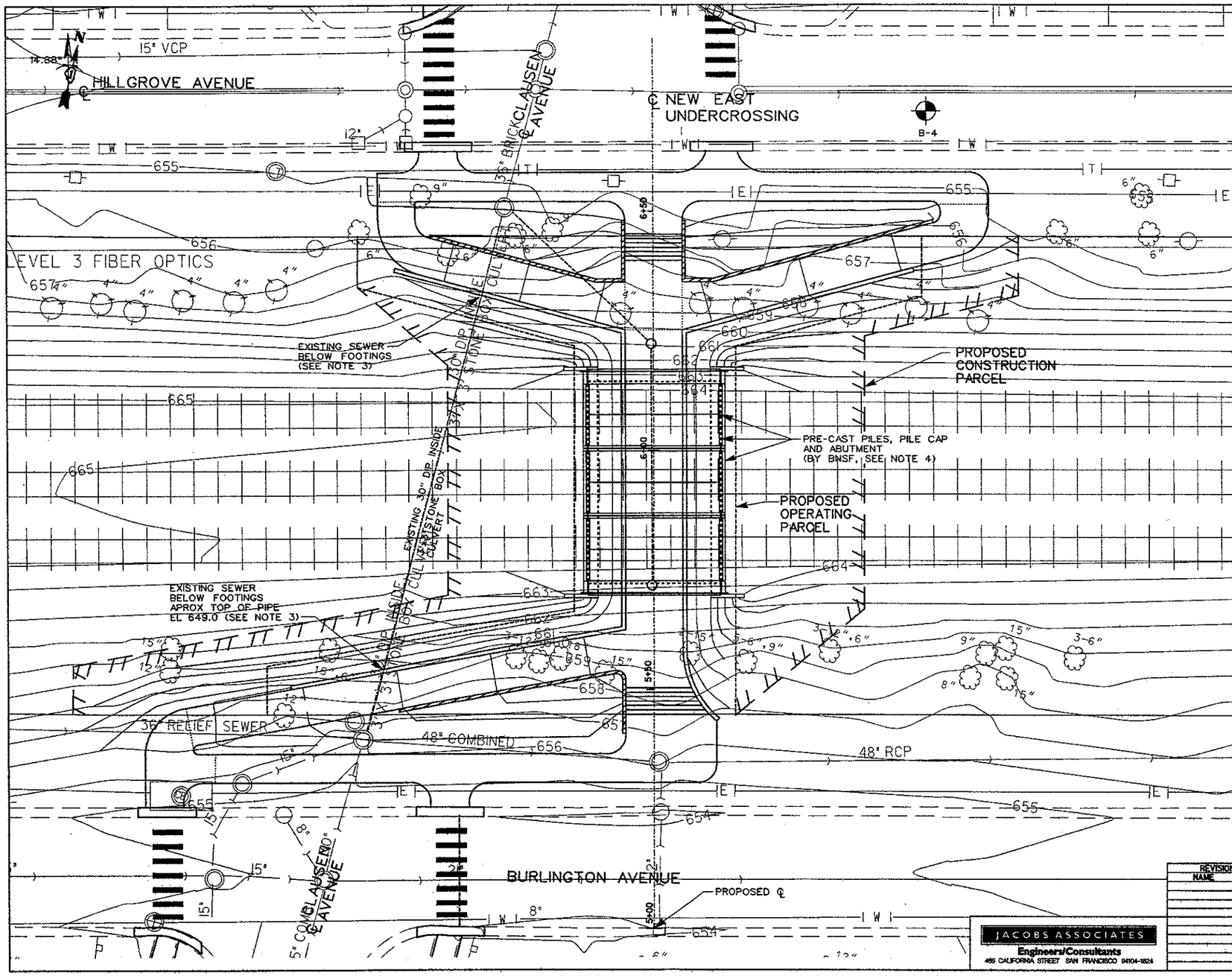

NOTES:

1. ALL CONSTRUCTION MATERIALS AND METHODS SHALL MEET APPLICABLE SECTIONS OF ILLINOS DEPARTMENT OF TRANSPORTATION (IDOT) STANDARD SPECIFICATIONS FOR ROAD AND BRIDGE CONSTRUCTION (STANDARD SPECIFICATIONS"), DATED 1/1/02, UNLESS NOTED OTHERWISE.
2. EXISTING ELEVATIONS AND UTILITIES ON HILLGROVE AVENUE MAY VARY FROM INDICATED EXISTING CONDITIONS AFTER CONSTRUCTION OF COMBINED SEWER AND ROADWAY IMPROVEMENT PROJECT. SEE IDOT PROJECT #HPD-1069(002) FOR DETAILS. CONTRACTOR SHALL VERIFY ALL EXISTING UTILITY LOCATIONS AND CURB TIE-IN ELEVATIONS PRIOR TO CONSTRUCTION.
3. CONTRACTOR SHALL CONFIRM DEPTH OF EXISTING SEWER PIPE PRIOR TO COMMENCING WORK.
4. COORDINATE ALL CONSTRUCTION ACTIVITIES WITH BNSF AND IN ACCORDANCE WITH THE SPECIFICATIONS.

0 10 20 30 40

SCALE: 1" = 10'-0"

JACOBS ASSOCIATES
Engineers/Consultants
465 CALIFORNIA STREET SAN FRANCISCO 94104-1824

REVISIONS	
NAME	DATE

ILLINOIS DEPARTMENT OF TRANSPORTATION
VILLAGE OF WESTERN SPRINGS
PEDESTRIAN UNDERPASSES

SITE PLAN
UP-10

SCALE: 1"=10'
DATE: 02/02/04
DRAWN BY: DH
CHECKED BY: RSC

F.A.U. RTE.	SECTION	COUNTY	TOTAL SHEETS	SHEET NO.
3782 & 3783	98-00076-00-BR	COOK	29	6
STA.	TO STA.			
FED. ROAD DIST. NO.	ILLINOIS	FED. AID PROJECT		

LEGEND

- [A] STRUCTURE TO BE ADJUSTED
- [R] STRUCTURE TO BE RECONSTRUCTED
- TREE TO BE REMOVED

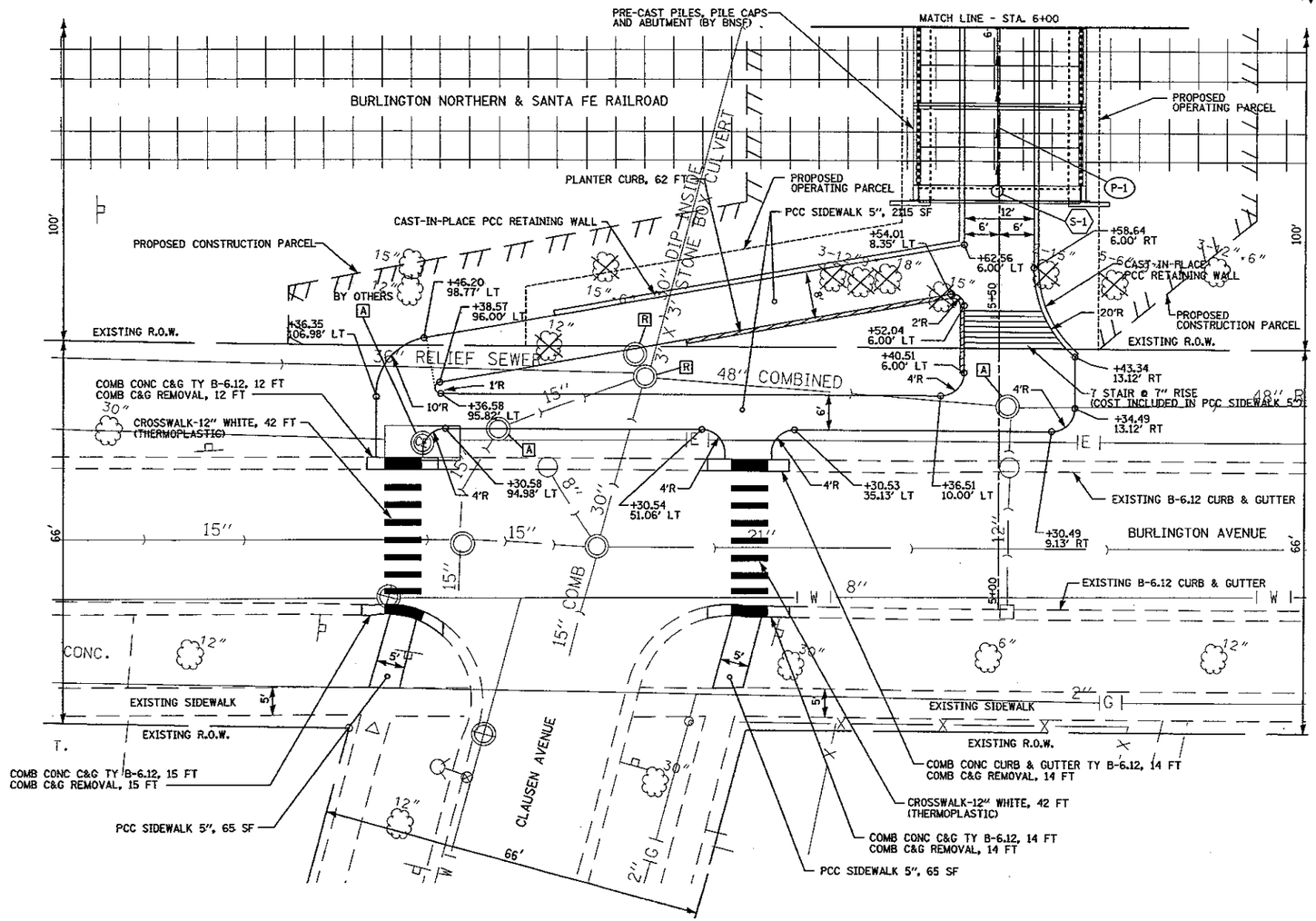

STRUCTURES

STRUCT. NO.	STATION	OFFSET	STRUCTURE TYPE	RIM	INVERT NORTH	INVERT SOUTH	INVERT EAST	INVERT WEST
S-1	5+72	0' RT	INLETS TA TIF SPL GT	651.22	647.55	-	-	-
-	-	-	-	-	-	-	-	-

PIPES

PIPE NO.	LENGTH (FOOT)	MATERIAL	TYPE	DIA. (IN.)	SLOPE %	TBF (CU.YD.)
P-1	50	SS CLA	1	12	0.50	17
-	-	-	-	-	-	-

REVISIONS

NAME	DATE

JAMES J. BENES & ASSOCIATES, INC.
950 Warrenville Road, Suite 101, Lisle, Illinois 60532
Tel. (630) 719-7570 Fax (630) 719-7589

ILLINOIS DEPARTMENT OF TRANSPORTATION
F.A.U. ROUTES 3782 & 3783

GEOMETRIC & DRAINAGE PLAN

SCALE: 1"=10'
DATE: 02/02/04
DRAWN BY: SMP
CHECKED BY: BDH

F.A.U. RTE.	SECTION	COUNTY	TOTAL SHEETS	SHEET NO.
3782 & 3783	98-00076-00-BR	COOK	29	7
STA.		TO STA.		
FED. ROAD DIST. NO.	ILLINOIS	FED. AID PROJECT		

LEGEND
- [A] STRUCTURE TO BE ADJUSTED
- [R] STRUCTURE TO BE RECONSTRUCTED
- TREE TO BE REMOVED

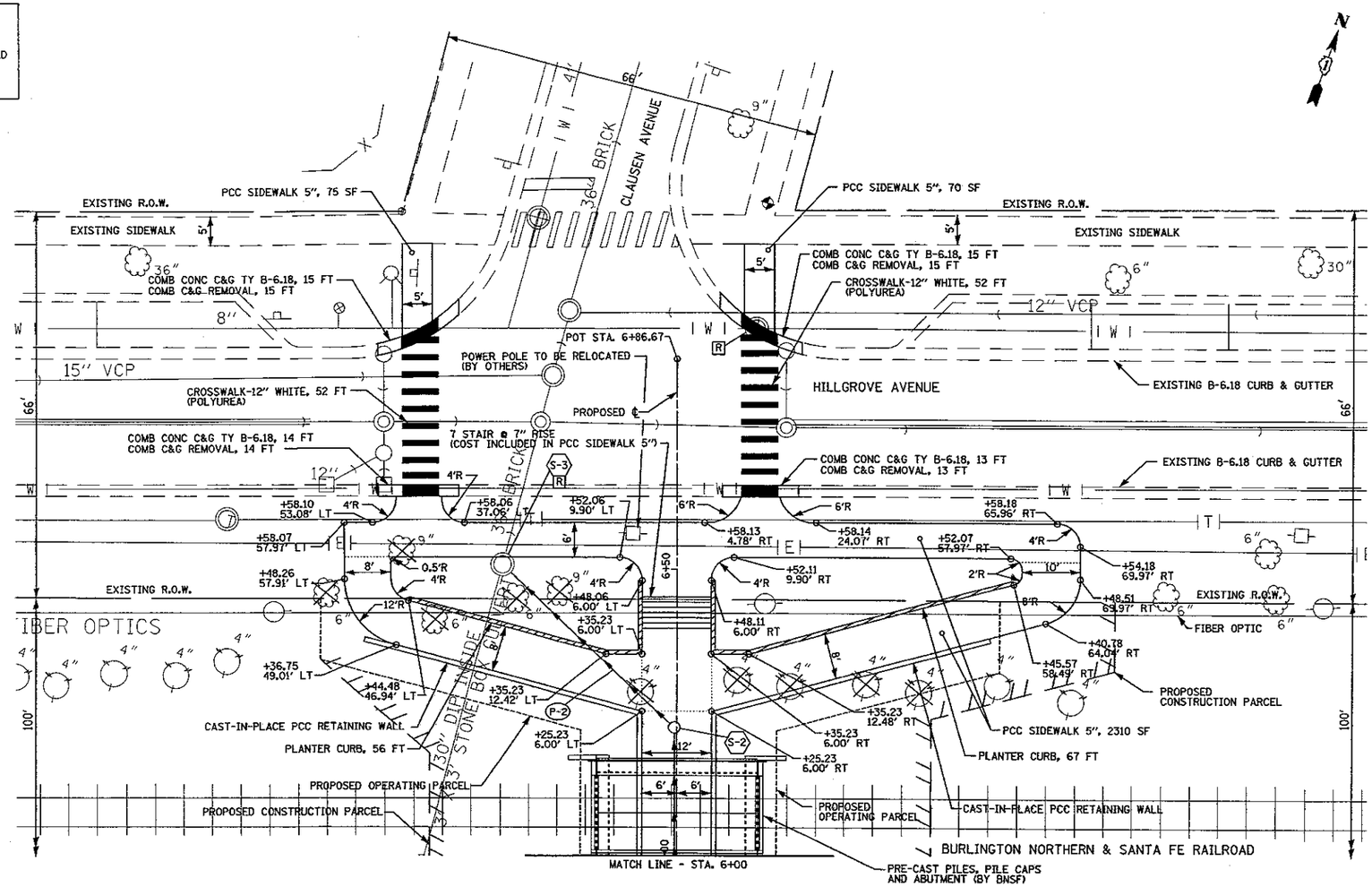

STRUCTURES

STRUCT. NO.	STATION	OFFSET	STRUCTURE TYPE	RIM	INVERT NORTH	INVERT SOUTH	INVERT EAST	INVERT WEST
S-2	6+23	0' RT	INLET TA TIF SPL GT	651.50	647.30(NW)	647.30	-	-
S-3	6+51	31' LT	MAN RECONST	655.00	647.01	647.01	647.10(SE)	-

PIPES

PIPE NO.	LENGTH (FOOT)	MATERIAL	TYPE	DIA. (IN.)	SLOPE %	TBF (CU.YD.)
P2	40	SS CLA	2	12	0.50	35
-	-	-	-	-	-	-

REVISIONS NAME	DATE

JAMES J. BENES & ASSOCIATES, INC.
950 Warrenville Road, Suite 101, Lisle, Illinois 60532
Tel. (630) 719-7570 Fax (630) 719-7589

ILLINOIS DEPARTMENT OF TRANSPORTATION
F.A.U. ROUTES 3782 & 3783

GEOMETRIC & DRAINAGE PLAN

SCALE: 1"=10'
DATE: 02/02/04
DRAWN BY: SMP
CHECKED BY: BDH

F.A.U. RTE.	SECTION	COUNTY	TOTAL SHEETS	SHEET NO.
5783	98-00076-00-BR	COOK	29	8
STA.	TO STA.			
FED. ROAD DIST. NO.	ILLINOIS	FED. AID PROJECT		

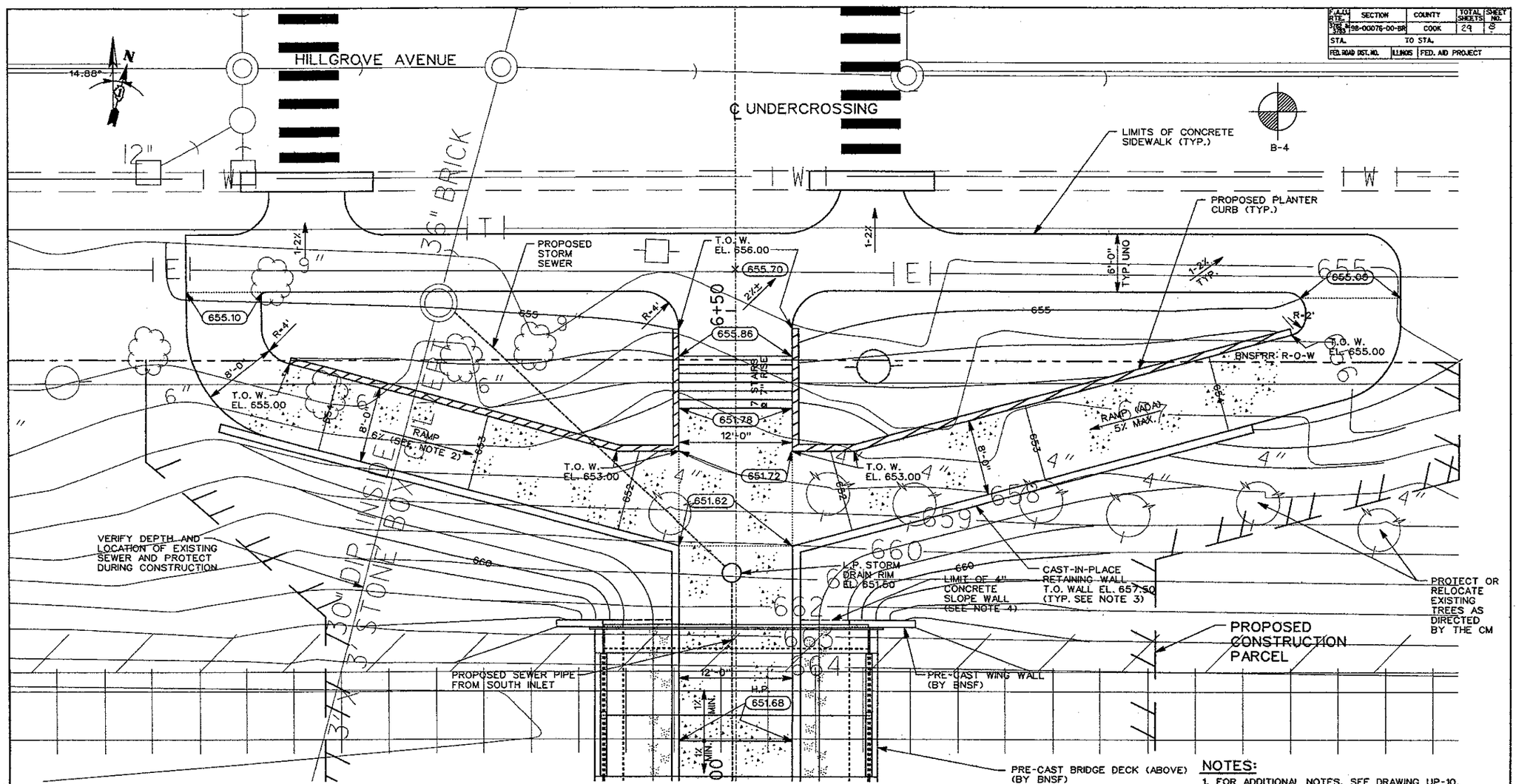

PLAN VIEW

NOTES:

1. FOR ADDITIONAL NOTES, SEE DRAWING UP-10.
2. EASTERN RAMP @ 5% MAX. GRADE IS COMPLIANT WITH ADA REQUIREMENTS.
3. FOR DETAILS OF RETAINING WALL LAYOUT, SEE DRAWINGS UP-13 & UP-14.
4. STABILIZE BACKFILL SLOPES STEEPER THAN 1½H : 1V WITH VEGETATION OR OTHER APPROVED METHOD.

FINISH GRADING LEGEND:

- 665 — FINISH GRADE 5' MAJOR CONTOUR
- FINISH GRADE 1' MAJOR CONTOUR
- CONCRETE BASE SLAB OR RAMP (AS INDICATED)
- 658.80 — FINISH GRADE SPOT ELEVATION
- PROPOSED CONSTRUCTION PARCEL
- BNSFRR RIGHT-OF-WAY (100')

0 5 10 15 20

GRAPHIC SCALE: 1" = 5'-0"

JACOBS ASSOCIATES
Engineers/Consultants
485 CALIFORNIA STREET SAN FRANCISCO 94104-1824

REVISIONS	
NAME	DATE

ILLINOIS DEPARTMENT OF TRANSPORTATION
VILLAGE OF WESTERN SPRINGS
PEDESTRIAN UNDERPASSES

FINAL GRADING PLAN (NORTH)

UP-11

SCALE: 1"=5'
DATE: 02/02/04
DRAWN BY: RAJ
CHECKED BY: BDH

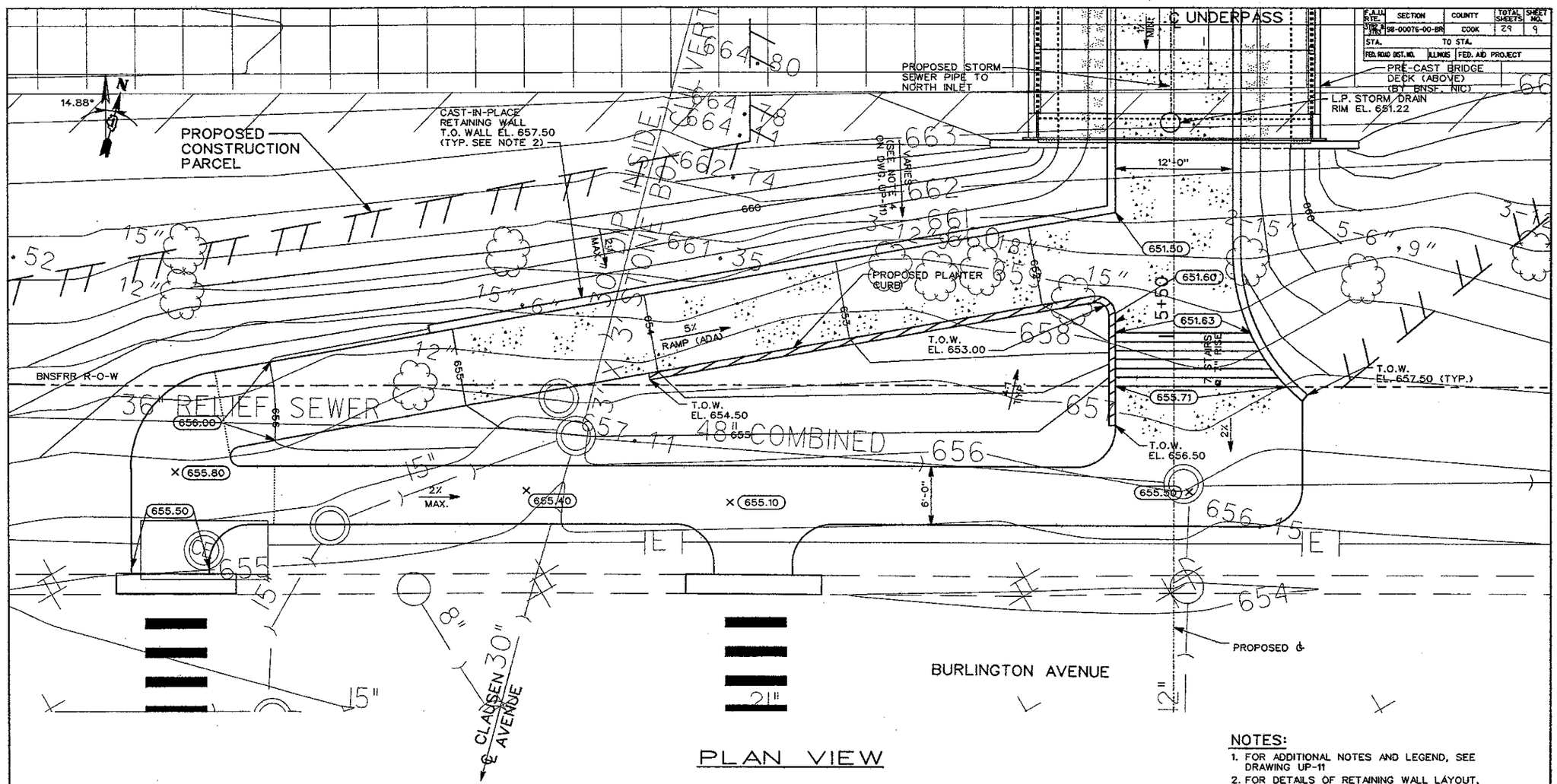

F.A.U. RTE.	SECTION	COUNTY	TOTAL SHEETS	SHEET NO.
3102 & 3103	98-00076-00-BR	COOK	29	9
STA.	TO STA.			
FED. ROAD DIST. NO.	ILLINOIS	FED. AID PROJECT		

NOTES:

1. FOR ADDITIONAL NOTES AND LEGEND, SEE DRAWING UP-11
2. FOR DETAILS OF RETAINING WALL LAYOUT, SEE DRAWINGS UP-13 & UP-14.

0 5 10 15 20

GRAPHIC SCALE: 1" = 5'-0"

JACOBS ASSOCIATES
Engineers/Consultants
465 CALIFORNIA STREET SAN FRANCISCO 94104-1824

REVISIONS	
NAME	DATE

ILLINOIS DEPARTMENT OF TRANSPORTATION
VILLAGE OF WESTERN SPRINGS
PEDESTRIAN UNDERPASSES

FINAL GRADING PLAN (SOUTH)

UP-12

SCALE: 1"=5'
DATE: 02/02/04
DRAWN BY: DH
CHECKED BY: RSC

F.A.U. RTE.	SECTION	COUNTY	TOTAL SHEETS	SHEET NO.
3782 & 3783	98-00076-00-BR	COOK	29	10
STA.		TO STA.		
FED. ROAD DIST. NO.	ILLINOIS	FED. AID PROJECT		

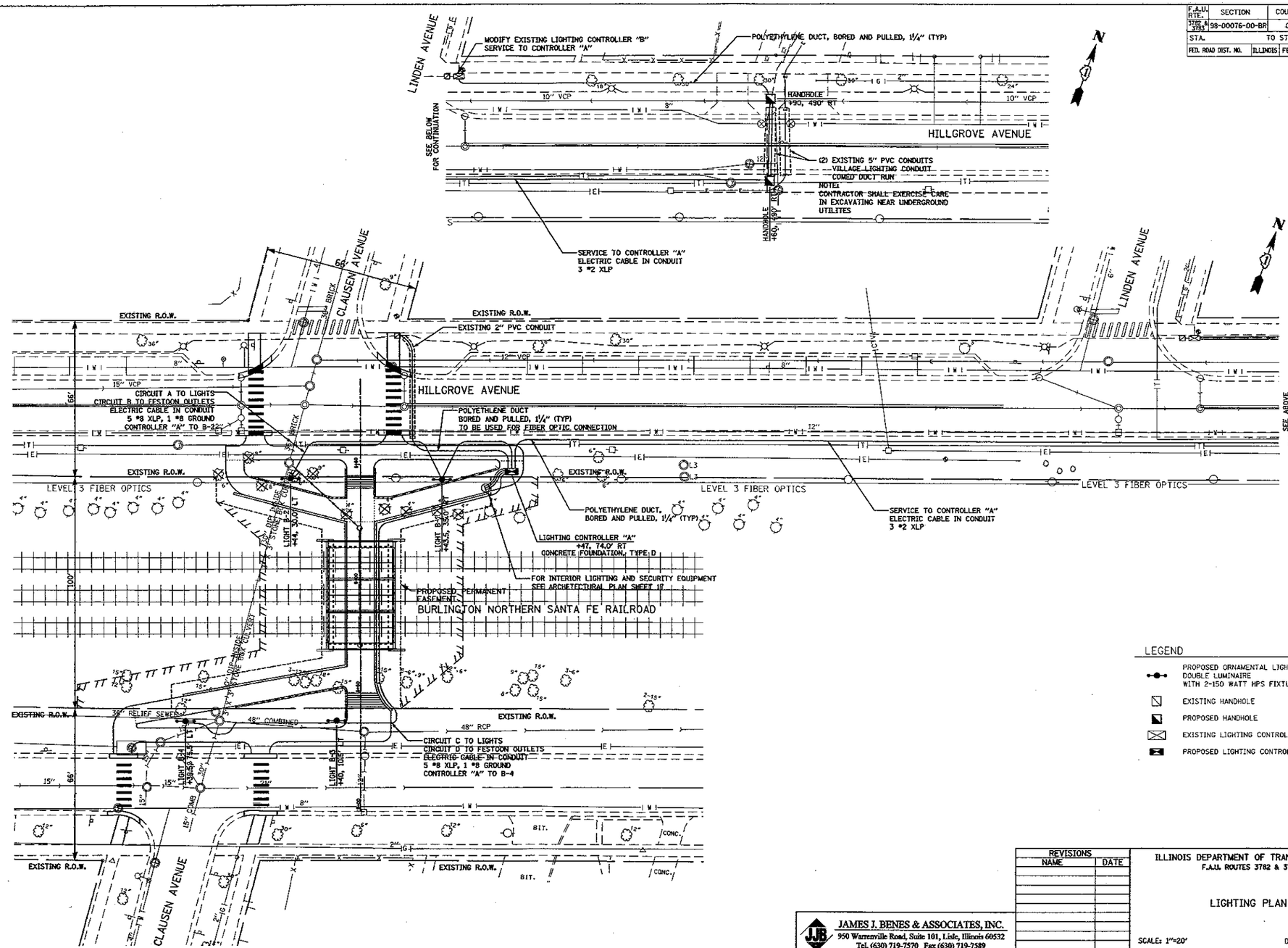

LEGEND

- PROPOSED ORNAMENTAL LIGHT POST-DOUBLE LUMINAIRE WITH 2-150 WATT HPS FIXTURES
- EXISTING HANDHOLE
- PROPOSED HANDHOLE
- EXISTING LIGHTING CONTROLLER
- PROPOSED LIGHTING CONTROLLER

JAMES J. BENES & ASSOCIATES, INC.
950 Warrenville Road, Suite 101, Lisle, Illinois 60532
Tel. (630) 719-7570 Fax (630) 719-7589

REVISIONS	
NAME	DATE

ILLINOIS DEPARTMENT OF TRANSPORTATION
F.A.U. ROUTES 3782 & 3783

LIGHTING PLAN

SCALE: 1"=20'
DATE: 02/02/04
DRAWN BY: SMP
CHECKED BY: JDM

F.A.U. RTE.	SECTION	COUNTY	TOTAL SHEETS	SHEET NO.
STBG. N 3783	98-00076-00-BR	COOK	29	11
STA.	TO STA.			
FED. ROAD DIST. NO.	ILLINOIS	FED. AID PROJECT		

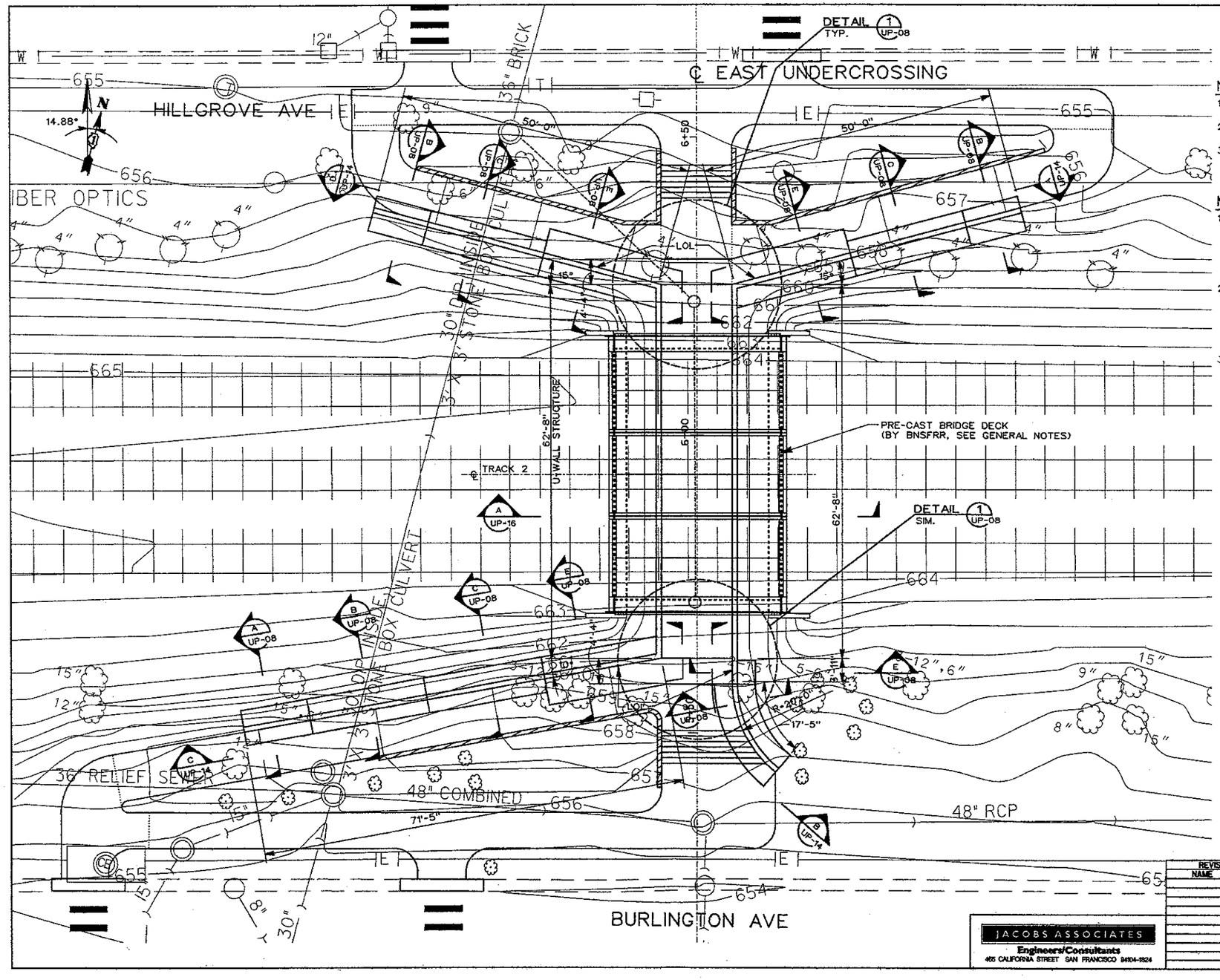

NOTES:

1. DIMENSIONS ARE SHOWN AT RETAINING WALL GEOMETRIC LAY OUT LINE (LOL).
2. FOR DEVELOPED ELEVATIONS, SEE DRAWING UP-14.
3. RETAINING WALLS N-S LOCATION SHALL BE ADJUSTED TO MATCH AS-BUILT LOCATION FOR TRACK 2 PRE-CAST BRIDGE.

MATERIAL NOTES:

1. COARSE AGGREGATE SHALL BE CLASS B, GRADATION CA7, IN ACCORDANCE WITH ARTICLE 1004.1 OF THE STATE SPECIFICATIONS. COARSE AGGREGATE SHALL BE COMPACTED TO MIN. 98% OF MAX. DRY DENSITY AS DETERMINED BY REFERENCE STANDARD PROCTOR TEST AASHTO T-99.
2. CONCRETE FOR RETAINING WALLS SHALL BE FURNISHED AND INSTALLED IN ACCORDANCE WITH ARTICLE 503 OF THE STATE SPECIFICATIONS. CONCRETE SHALL BE CLASS SI IN ACCORDANCE WITH ARTICLE 1020 OF THE STATE SPECIFICATIONS, WITH A 28-DAY MINIMUM COMPRESSIVE STRENGTH OF 3500 PSI.
3. REINFORCING STEEL SHALL BE GRADE 60 DEFORMED BARS IN ACCORDANCE WITH ARTICLE 1006.10 OF THE STATE SPECIFICATIONS.

0 5 10 15 20

GRAPHIC SCALE: 1/8" = 1'-0"

REVISIONS	
NAME	DATE

JACOBS ASSOCIATES
Engineers/Consultants
465 CALIFORNIA STREET SAN FRANCISCO 94104-1824

ILLINOIS DEPARTMENT OF TRANSPORTATION
VILLAGE OF WESTERN SPRINGS
PEDESTRIAN UNDERPASSES

RETAINING WALL: PLAN

UP-13

SCALE: 1/8" = 1'-0"
DATE: 02/02/04
DRAWN BY: DH
CHECKED BY: RSC

F.A.U. RTE.	SECTION	COUNTY	TOTAL SHEETS	SHEET NO.
3782 & 3783	98-00076-00-BR	COOK	29	12
STA.		TO STA.		
FED. ROAD DIST. NO.	ILLINOIS	FED. AID PROJECT		

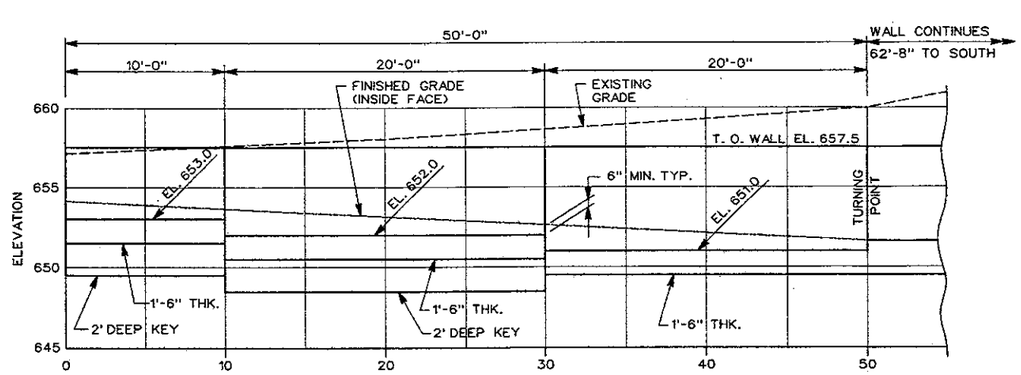

ELEVATION (A) UP-13
SCALE: 1/4"=1'-0"

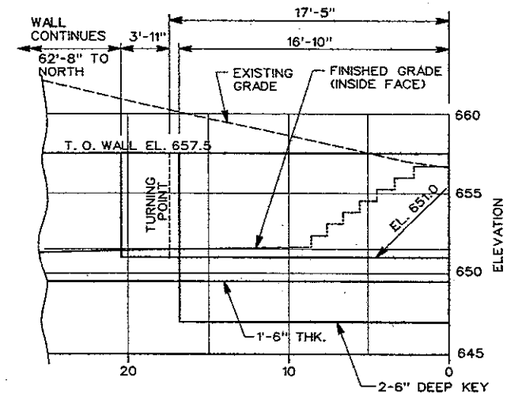

ELEVATION (B) UP-13
SCALE: 1/4"=1'-0"

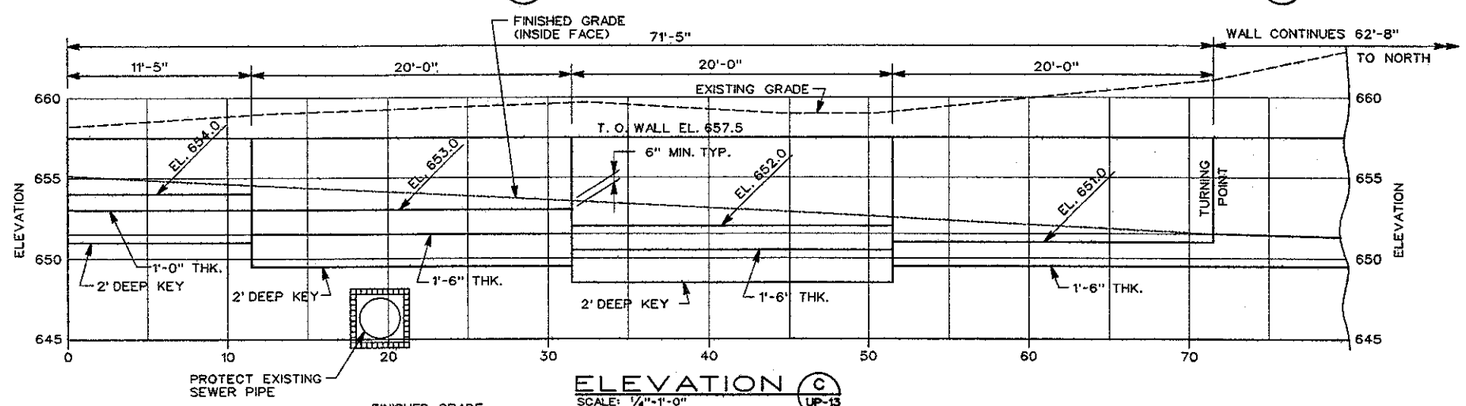

ELEVATION (C) UP-13
SCALE: 1/4"=1'-0"

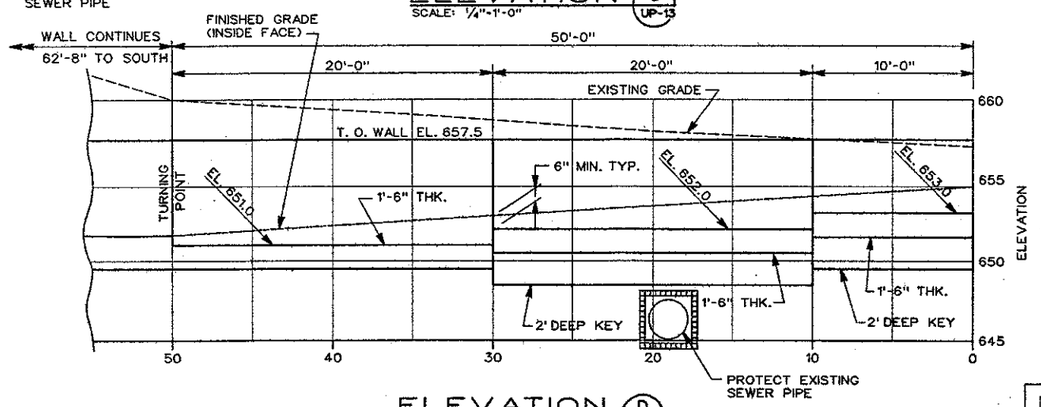

ELEVATION (D) UP-13
SCALE: 1/4"=1'-0"

NOTES:

1. FOR RETAINING WALL LAYOUT DIMENSIONS, SEE DRAWING UP-13.

JACOBS ASSOCIATES
Engineers/Consultants
465 CALIFORNIA STREET SAN FRANCISCO 94104-1824

REVISIONS	
NAME	DATE

ILLINOIS DEPARTMENT OF TRANSPORTATION
VILLAGE OF WESTERN SPRINGS
PEDESTRIAN UNDERPASSES

RETAINING WALL: ELEVATIONS
UP-14

SCALE: 1/4"=1'-0" DRAWN BY: DH
DATE: 02/02/04 CHECKED BY: MCL

F.A.U. RTE.	SECTION	COUNTY	TOTAL SHEETS	SHEET NO.
5799 & 5783	98-00076-00-BR	COOK	29	13
STA.	TO STA.			
FED. ROAD DIST. NO.	ILLINOIS	FED. AID PROJECT		

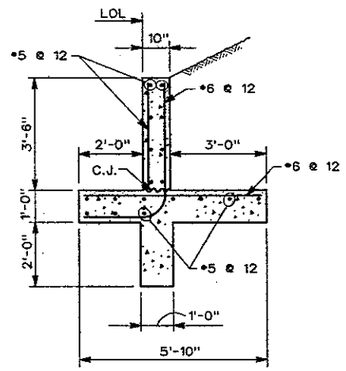

SECTION (A) UP-13
SCALE: 1/2"=1'-0"

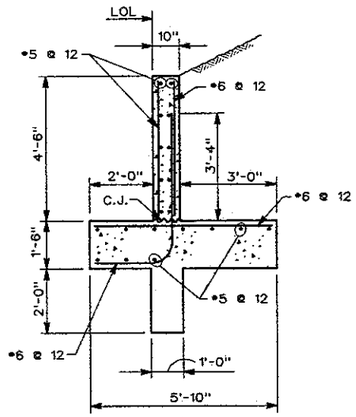

SECTION (B) UP-13
SCALE: 1/2"=1'-0"

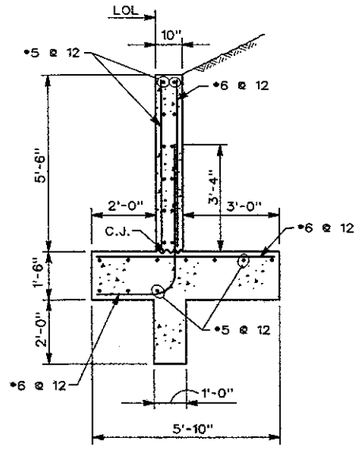

SECTION (C) UP-13
SCALE: 1/2"=1'-0"

NOTES:

1. FOR RETAINING WALL LAYOUT DIMENSIONS, SEE DRAWING UP-13.

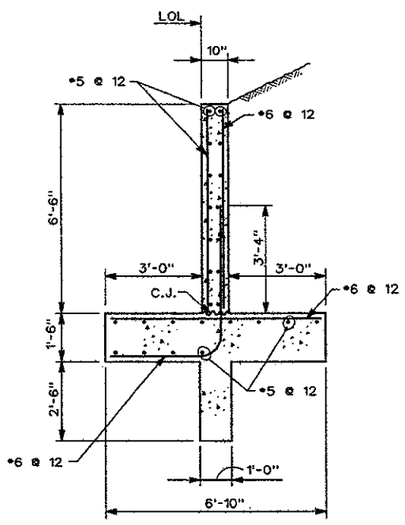

SECTION (D) UP-13
SCALE: 1/2"=1'-0"

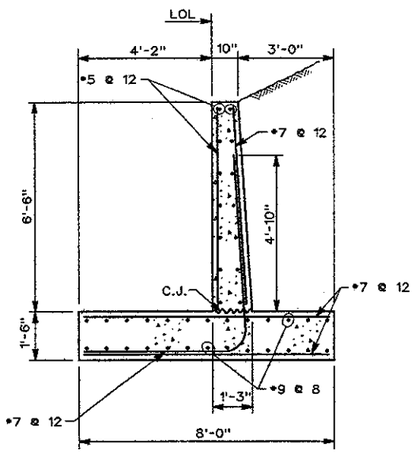

SECTION (E) UP-13
SCALE: 1/2"=1'-0"

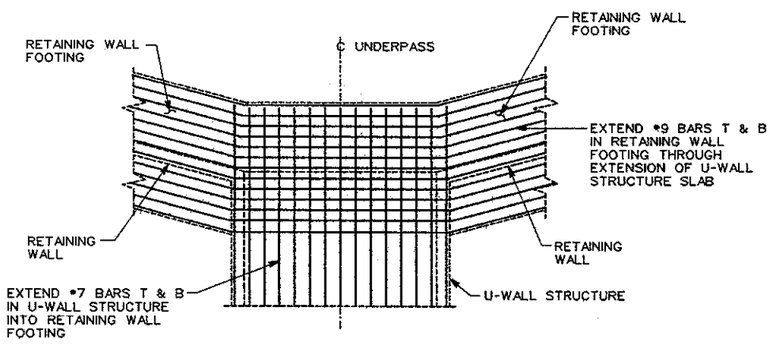

DETAIL (1) UP-13
SCALE: 1/4"=1'-0"

0 1 2 3 4 5
GRAPHIC SCALE: 1/2" = 1'-0"

REVISIONS	
NAME	DATE

JACOBS ASSOCIATES
Engineers/Consultants
405 CALIFORNIA STREET SAN FRANCISCO 94104-1824

ILLINOIS DEPARTMENT OF TRANSPORTATION
VILLAGE OF WESTERN SPRINGS
PEDESTRIAN UNDERPASSES

RETAINING WALLS: TYPICAL SECTIONS

UP-08

SCALE: 1/2"=1'-0"
DATE: 02/02/04
DRAWN BY: DH
CHECKED BY: MCL

F.A.U. RTE.	SECTION	COUNTY	TOTAL SHEETS	SHEET NO.
5782 & 5783	98-00076-00-BR	COOK	29	14
STA.	TO STA.			
FED. ROAD DIST. NO.	ILLINOIS	FED. AID PROJECT		

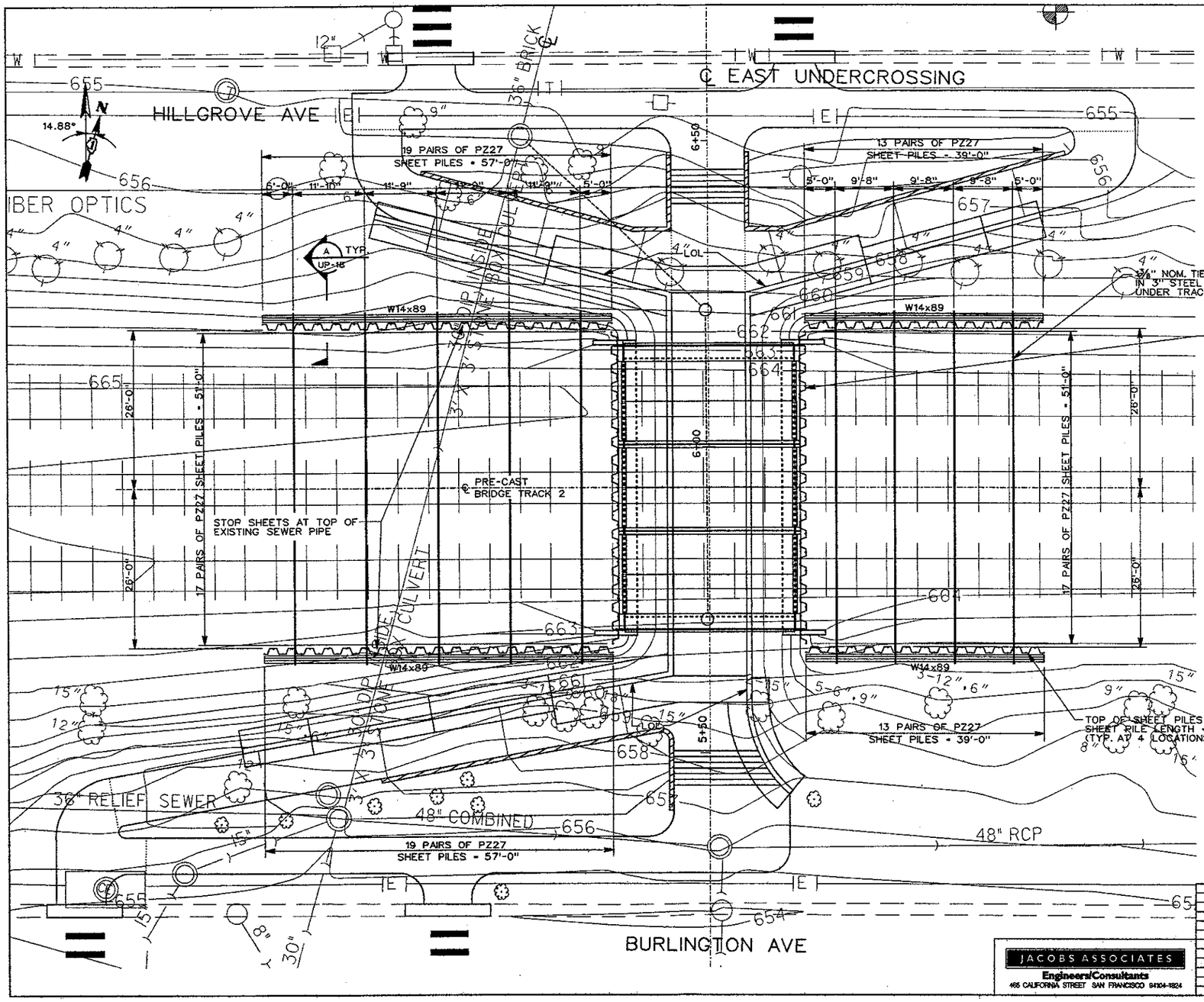

NOTES:

1. FOR DEVELOPED ELEVATIONS, SEE DRAWING UP-014.

SHORING MATERIAL

ITEM	DISCRIPTION	QUANTITY	NOTE
SHEETS	PZ27 x 32ft.	196	GR. A328
WALES	HP14x89 x 39ft.	2	GR. A36
WALES	HP14x89 x 57ft.	2	GR. A36
TIE-RODS	1⅜" NOM. DIA. x 40ft. TYPE R71 150 KSI MIN. YIELD 189 KIPS PER BAR	14	WILLIAMS
COUPLING	PART NO. R7219	9	WILLIAMS
HEX NUT	PART NO. R7311	18	WILLIAMS
WASHER	PART NO. R9F11150	18	WILLIAMS
BEARING PLATE	PART NO. R1K12022011R0 (PLATE 1½"x12"x12")	18	WILLIAMS

0 5 10 15 20

GRAPHIC SCALE: ⅛" = 1'-0"

REVISIONS	
NAME	DATE

JACOBS ASSOCIATES
Engineers/Consultants
466 CALIFORNIA STREET SAN FRANCISCO 94104-1824

ILLINOIS DEPARTMENT OF TRANSPORTATION
VILLAGE OF WESTERN SPRINGS
PEDESTRIAN UNDERPASSES

(BY OTHERS)

SHORING WALL: PLAN

UP-15

SCALE: ⅛" = 1'-0"
DATE: 02/02/04
DRAWN BY: DR
CHECKED BY: RSC