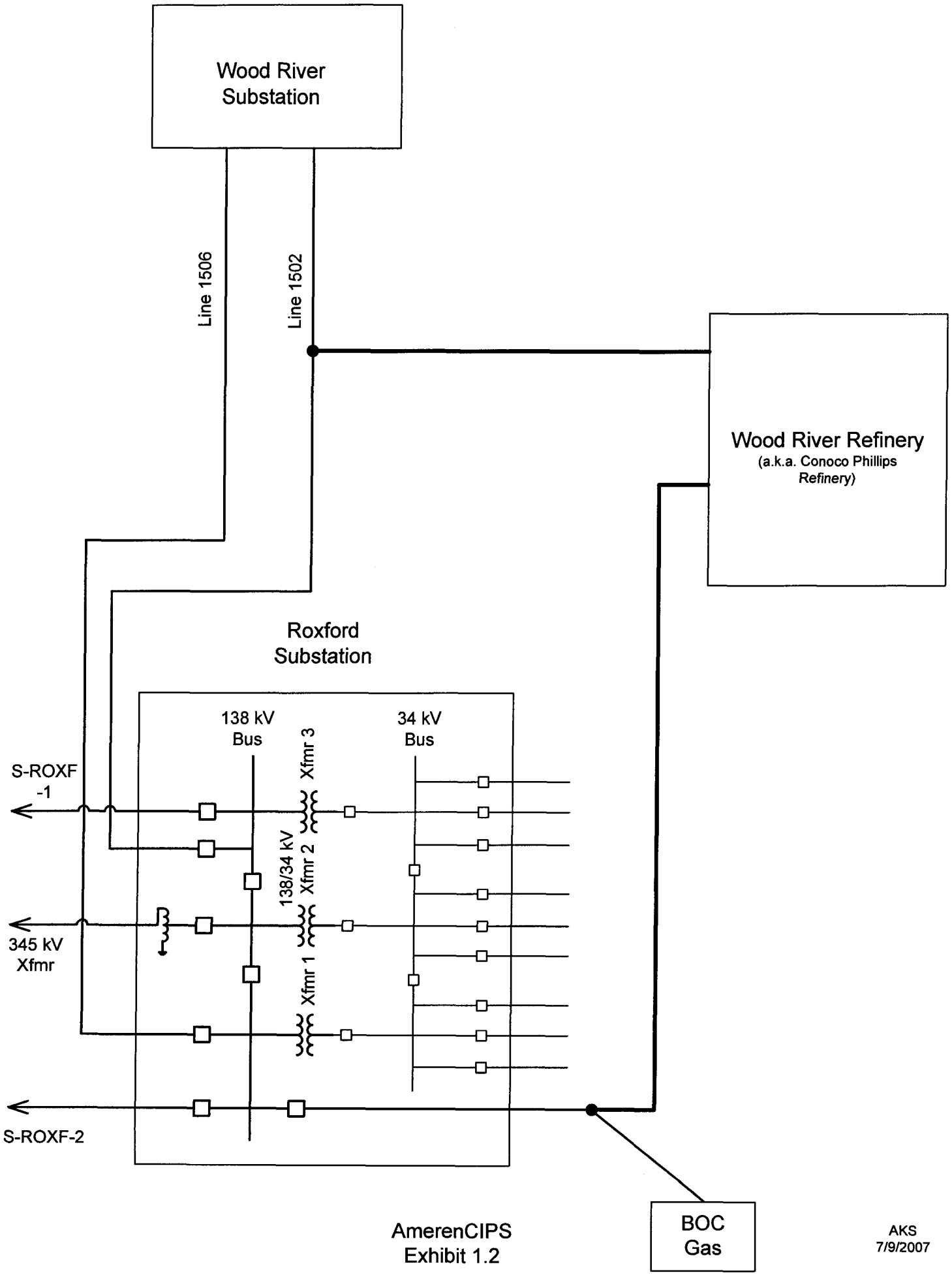
Wood River Substation
Line 1506
Line 1502
Wood River Refinery
(a.k.a. Conoco Phillips Refinery)
Roxford Substation
138 kV Bus
34 kV Bus
Xfmr 3
138/34 kV Xfmr 2
Xfmr 1
S-ROXF -1
345 kV Xfmr
S-ROXF-2
BOC Gas
AmerenCIPS Exhibit 1.2
AKS 7/9/2007